འཁོར་ལོ་ཆུས་གསོག་མེ་ཚད་འཛིན།

KHORLOCHHU HYDRO POWER LIMITED

4x150MW KHORLOCHHU HYDRO POWER PROJECT

BIDDING DOCUMENT

FOR

CONSTRUCTION OF DOKSUM PRIMARY SCHOOL AT DOKSUM NEW TOWNSHIP, TRASHIYANGTSE.

DOMESTIC COMPETITIVE BIDDING

Tender No. 06/KHPL/C&PD/INFRA/2026/16945 dated 07.08.2026

These documents are meant for the exclusive purpose of bidding against this NIT and shall not be transferred, reproduced or otherwise used for purposes other than that for which they are specifically issued.

Table of Contents

SECTION I - NOTICE INVITING TENDER 5
SECTION II – INSTRUCTIONS TO BIDDERS 7
A. Introduction 7
ITB. 1. Definitions and Interpretations 7
ITB. 2. Source of Funds 7
ITB. 3. Scope of Works 7
ITB. 4. Fraud and Corruption 7
ITB. 5. Eligibility of Bidders 7
ITB. 6. Exclusion of Bidders 8
ITB. 7. Joint Venture Bids 8
ITB. 8. Responsibility of Bidders 9
B. The Bidding Documents 9
ITB. 9. Contents of Bidding Document 9
ITB. 10. Clarifications on Bidding Documents 10
ITB. 11. Site Visit and Familiarization with Local Laws 10
ITB. 12. Pre-Bid Meeting 11
ITB. 13. Amendment of Bidding Documents 11
C. Preparation of Bids 12
ITB. 14. Cost of bidding 12
ITB. 15. Language of the Bid and Units of Measure 12
ITB. 16. Alternative Bids 12
ITB. 17. Documents Constituting the Bid 12
ITB. 18. Bid Submission Form and Bill of Quantities 14
ITB. 19. Bid Prices and Discounts 14
ITB. 20. Contract Price Adjustment 14
ITB. 21. Currencies of Bid 15
ITB. 22. Period of Validity of Bids 15
ITB. 23. Bid Security 15
ITB. 24. Signing of Bids 16
D. Submission of Bids 16
ITB. 25. Submission of Bids 16
ITB. 26. Deadline for Submission of Bids 17
ITB. 27. Late Bids 17
ITB. 28. Withdrawal, Substitution or Modification of Bids 17
E. Bid Opening, Evaluation and Comparison 17
ITB. 29. Bid Opening 17
ITB. 30. Confidentiality 19
ITB. 31. Clarification of Bids 19
ITB. 32. Responsiveness of Bids 19
ITB. 33. Technical Evaluation 20
ITB. 34. Correction of Arithmetical Errors in Price Bid 20
ITB. 35. Evaluation and Comparison of Bids 21
ITB. 36. Post-qualification of the Bidder 22
ITB. 37. KHPL's Right to Accept any Bid, and to Reject any or All Bids 22
F. Award of Contract 22
ITB. 38. Award Criteria 22
ITB. 39. Notification of Award 22
ITB. 40. Signing of Contract Agreement 22

ITB. 41. Contract Performance Security 22
ITB. 42. Retention Money 23
SECTION III – BID DATA SHEET 24
SECTION IV – GENERAL CONDITIONS OF CONTRACT 28
1. General Provisions 28
1.1. Definitions 28
1.2. Interpretation 30
1.3. Notices 31
1.4. Governing Law and Language 31
1.5. Assignment 32
1.6. Fraud and Corruption 32
1.7. Joint Venture 33
2. The Employer 33
2.1. Access to Site 33
2.2. Employer Representative 33
2.3. Employer's Responsibilities 34
3. The Contractor 34
3.1. Responsibility of the Contractor 34
3.2. Performance Security 35
3.3. Contractor's Representative and Construction Manager 35
3.4. Opportunities for other Contractors 37
3.5. Emergency Work 37
3.6. Progress Review Meetings 37
3.7. Protection of the Environment 38
3.8. Site Regulations and Safety 38
3.9. Site Clearance 38
3.10. Watching and Lighting 38
3.11. Explosives 38
3.12. Temporary Utilities 38
3.13. Working hours 38
3.14. Program of Performance 39
3.15. Progress of Performance 39
4. Subcontracting 39
5. Contractor's Staff/Labour and Equipment 39
5.1. Key Personnel 40
5.2. Labour 40
5.3. Contractor's Equipment 41
6. Plant, Material and Workmanship 41
6.1. Methodology of Construction & Equipment mobilization 41
6.2. Test and Inspection 41
7. Work Execution 43
7.1. Benchmark 43
7.2. Contractor's Supervision 43
7.3. Quality Assurance Program 43
7.4. Progress Report 43
7.5. Materials obtained from excavation 43
8. Commencement, Delays and Suspension 44
8.1. Time for commencement and completion 44
8.2. Manner of Execution 44
8.3. Extension of Time for Completion 45
8.4. Liquidated Damages 45
9. Taking Over 45

9.1. Test on Completion 45
9.2. Taking Over of Works 46
9.3. Operating and Maintenance Manuals 47
10. Defects 47
10.1. Correction of Defects 47
10.2. Uncorrected Defects 47
10.3. Defect Liability 47
11. Measurement and Valuation 48
12. Variations and Adjustments 49
12.1. Contract Price Adjustment 49
12.2. Change in Works 50
12.3. Variations in Contract 51
12.4. Adjustment of the Contract Price 51
12.5. Day Work 53
12.6. Record of costs 53
12.7. Change in Laws and Regulations 53
13. Contract Price and Payment 53
13.1. Contract Price 53
13.2. Advance Payment 54
13.3. Terms of Payment 54
13.4. Taxes and Duties 55
13.5. Retention Money 55
14. Termination 56
14.1. Termination for Employer's Convenience 56
14.2. Termination for Contractor's default 56
14.3. Termination by Contractor 57
14.4. Payment upon Termination 58
14.5. Suspension 58
15. Care of the Works and Indemnities 59
15.1. Protection of Works 59
15.2. Copyright 59
15.3. Confidential Information 59
15.4. Patent Indemnity 60
15.5. Limitations of Liability 61
15.6. Indemnification Employer 61
16. Exceptional Event (Force Majeure) 62
17. Insurance 63
18. Claims 63
18.1. Contractor's Claims 63
18.2. Claims towards idling of resources 64
18.3. Early Warning 65
19. Disputes and Arbitrations 65
19.1. Amicable Settlement 65
19.2. Dispute Resolution 65
SECTION V - SPECIAL CONDITIONS OF CONTRACT 66
SECTION VI – TECHNICAL SPECIFICATIONS & DRAWINGS 69
1. Scope of Works 69
2. Technical Specifications 69
3. Inspection and Tests 69
4. Construction Drawings 70
SECTION VII –FORMS 71
SECTION VIIA - BIDDING FORMS 71

Form 1: Bid Security (Bank Guarantee) 71
Form 2: Certificate Regarding Acceptance of Important Conditions 72
Form 3: Integrity Pact Statement 73
Form 4: Bidder's Information Form 75
Form 5A: Power of Attorney 77
Form 6: Information for Meeting Qualification Requirement (QR) 78
Form 11: Deviation Schedule 86
Form 14: Bid Submission Form 87
Form 15: Bill of Quantities 88
SECTION VIIB- CONTRACT FORMS (Form No. 16 to Form No. 21) 223
Form 16: Letter of Award of Contract 224
Form 17: Contract Agreement 225
Form 18: Bank Guarantee for Contract Performance Security 227
Form 19: Bank Guarantee for Advance Payment 228
Annexure-I: Construction Drawings 229

SECTION I - NOTICE INVITING TENDER

NOTICE INVITING TENDER

(DOMESTIC COMPETITIVE BIDDING)

1) KHPL invites sealed Bids from eligible Bidders registered with BCTA under Large (W1) and meeting the minimum qualification requirements for "**Construction of Doksum Primary School at Doksum New Township, Doksum, Trashiyangtse"** as per the scope of works as detailed hereinafter.

2) Scope of Work: The brief scope of work includes construction of Administrative Buildings, Classrooms, Toilets, Staff Quarters, Landscaping works including internal roads and footpath and water supply works.

3) Detailed Specifications, Scope of Work and Terms & Conditions of the Work are given in the Bidding Documents, which is available for downloading free of cost from the website (www.khpl.bt) as per the following schedule:

NIT No. & Name of the Works	:	NIT No. 06/KHPL/C&PD/INFRA/2026/16945 dated August 07, 2026. Name of Work: **Construction of Doksum Primary School at Doksum New Township, Trashiyangtse.**
Document availability Date & Time	:	From August 08, 2026, to September 07, 2026, on all working days.
Bid Receipt Date & Time and Place of Receipt	:	Up to September 07, 2026, by 10:30 AM (BST) at Corporate Office, Doksum New Township, Trashiyangtse
Bid Opening Date & Time and Place	:	On September 07, 2026, at 11:00 AM (BST) at Conference Hall, Corporate Office, Doksum New Township, Trashiyangtse.
The Name and Address of the contact person for seeking Clarifications on the Bid Documents	:	Mr. Sonam Rixin, General Manager, Contracts & Procurement Division, Khorlochhu Hydro Power Limited, Corporate Office, Doksum New Township, Trashiyangtse Email: gm.cnp@khpl.bt Up to August 28, 2026 by 17:00 PM (BST)

4) Bidding documents shall be downloaded from the KHPL website www.khpl.bt/tender free of cost.

5) Bidders downloading the documents from the website should register themselves by informing to the nodal officer of KHPL immediately after the documents are downloaded or, before the dateline for submission of the bid and their intention to submit the Bid on the basis of downloaded documents.

6) Downloading of Bidding Documents shall not automatically construe that the Bidder fulfils the Qualifying Requirements, which shall be determined during Bid evaluation based on data/documents submitted by the Bidder. Bids shall be submitted at the address given below and shall be opened in the presence of Bidder's representatives who choose to attend.

7) All Bids must be accompanied by Bid Security for an amount of **Nu.2,945,000.00** only, in the form of Demand Draft/Cash Warrant/Bank Guarantee, issued by any financial institutions of Bhutan acceptable to KHPL and shall remain valid till **January 05, 2027**. Bids not accompanied with an acceptable Bid Security as specified in Bidding Documents, or Bids accompanied with Bid Security of inadequate value and validity shall be rejected by KHPL and in such cases Bids shall be returned to the Bidders.

8) Qualification Requirement for Bidders shall be as specified in the BDS.

9) No request for sending the Bidding Documents by post or by Courier Service shall be entertained. Bid Documents are not transferrable.

10) KHPL reserves the right to accept or reject any Bid partly or fully or cancel the bidding process without assigning any reasons thereof and in such case no Bidder/intending Bidder shall have any claim arising out of such action of KHPL.

11) The Bidders shall be required to complete the Works within **730 days**.

12) Address for Communication:

General Manager,
Contracts & Procurement Division,
Khorlochhu Hydro Power Limited,
Corporate Office, Doksum New Township, Trashiyangtse,
Phone No.: +975 17289767, Email: gm.cnp@khpl.bt

SECTION II – INSTRUCTIONS TO BIDDERS

A. Introduction

ITB. 1. Definitions and Interpretations

ITB.1.1. Unless otherwise stated, throughout this Bidding Document definitions and interpretations shall be as prescribed in the General Conditions of Contract (GCC).

ITB. 2. Source of Funds

ITB.2.1. Khorlochhu Hydro Power Limited (KHPL) intends to finance the works covered under this bidding documents from the source(s) as mentioned in the Bidding Data Sheet (BDS)

ITB. 3. Scope of Works

ITB.3.1. The scope of Works shall be as specified in Section VI, Technical Specification. The name and identification number of the Contract is provided in the NIT.

ITB.3.2. The successful Bidder will be required to complete the Works by the Time for Completion specified in the SCC.

ITB. 4. Fraud and Corruption

ITB.4.1. KHPL requires that the Bidders, Contractors and their Subcontractors and their respective employees, consultants & agents, shall observe the highest standards of ethics during the bidding process and execution of contracts. In pursuance of this policy, the terms "Corrupt practice", "Fraudulent practice", "Collusive practice", "Coercive practice" and "Obstructive practice" shall be as per definition in 1.3

ITB.4.2. KHPL will reject a Bid for award if it determines that the Bidder recommended for award has, directly or through an agent, engaged in corrupt, fraudulent, collusive, coercive or obstructive practices in competing for the Contract in question;

ITB.4.3. KHPL will declare the Bidder ineligible, either indefinitely or for a stated period of time, if at any time it determines that the Bidder has, directly or through an agent, engaged in corrupt, fraudulent, collusive, coercive or obstructive practices in competing for, or in executing, a Contract;

ITB.4.4. KHPL requires that Bidders, as a condition of admission to eligibility, execute and attach to their Bids an Integrity Pact Statement as per **Form: 3 of Section VIIA**. Failure to provide a duly executed Integrity Pact Statement may result in disqualification of the Bid; and

ITB.4.5. KHPL will report any case of corrupt, fraudulent, collusive, coercive or obstructive practice to the relevant agencies, including but not limited to the Anti-corruption Commission (ACC) of the Kingdom of Bhutan, for necessary action in accordance with the statutes and provisions of the relevant agency.

ITB.4.6. KHPL shall have the discretion to take any or all of the actions specified under ITB.4.1, ITB.4.2, ITB.4.3 and ITB.4.4.

ITB.4.7. Furthermore, the Bidders shall make themselves fully aware of the provisions stated in 1.3 with regard to Fraud and Corruption.

ITB. 5. Eligibility of Bidders

ITB.5.1. A Bidder shall be an incorporated legal entity or a Joint Venture of such entities under an existing agreement where joint venture bids are permitted. A Bidder, and all parties constituting the Bidder, shall have the nationality of Bhutan. A Bidder shall be deemed to have the nationality of Bhutan if the Bidder is constituted, incorporated, or registered and operates in conformity with the provisions of the laws of Bhutan. This criterion shall also apply to the determination of the nationality of the proposed Subcontractors for any part of the Contract.

ITB.5.2. A Bidder shall not have conflict of interest. Any Bidder, found to have a conflict of interest, shall be disqualified. Bidders may be considered to have a conflict of interest with one or more parties in the same bidding process if they:

a) or any of their affiliates are associated, or have been associated in the past, to provide consulting services for the preparation of the design, specifications and/or other documents to be used for the procurement of the Works to be executed pursuant to these Bidding Documents, or

submit more than one Bid in this bidding process either individually or as a partner in the Joint Venture, except for alternative offers permitted under ITB 17. Participation by a Bidder in more than one Bid shall result in rejection of all Bids in which the Bidder has participated. However, this does not limit the participation of a Bidder as a Subcontractor in another Bid or more than one Bid, or

b) Bidder otherwise engage, either directly or through any of their Affiliates, a KHPL employee, his spouse or any of the dependent parent or close relative of a KHPL employee. For the purposes of this sub-paragraph, a close relative is defined as immediate family which includes, brother, sister, and own children.

ITB.5.3. A company formed by the merger of two or more companies or divisions of such companies engaged in execution of works as specified in the Bidding Documents can also participate, provided the constituent companies or divisions before merger, individually or jointly, meet the stipulated qualification requirements fully.

ITB.5.4. The Bidder shall provide such evidence of their continued eligibility satisfactory to the KHPL as the KHPL shall reasonably request till the award of the contract.

ITB. 6. Exclusion of Bidders

ITB.6.1. A Bidder shall be ineligible for participating in this bidding process under the following circumstances:

a) The Bidders is insolvent or is in receivership or is a bankrupt or is in the process of being wound up; or has entered into an arrangement with the creditors; or

b) The Bidders' affairs are being administered by a court, judicial officer or appointed liquidator; or

c) The Bidder has suspended business or is in any analogous situation arising from similar procedures under the laws and regulations of Kingdom of Bhutan; or

d) The Bidder has been found guilty of professional misconduct by any competent authority as per law or any professional body; or

e) The Bidder has not fulfilled his obligations with regard to the payment of taxes, social security or other payments due in accordance with the laws of the Kingdom of Bhutan; or

f) The Bidder has been declared by KHPL to be ineligible for participation in tenders on account of any fraud and/or corruption in competing or executing a Contract; or

g) The Bidder has been debarred from participation in public procurement by any competent authority of the Kingdom of Bhutan as per law.

ITB. 7. Joint Venture Bids

ITB.7.1. If so permitted in the BDS, Bids submitted by a Joint Venture (JV) of number of legal entities as specified in the BDS subject to the condition that the total number of legal entities shall not exceed the number of entities as specified in the BDS, shall comply with the following requirements:

a) The Bid shall be signed by the authorised signatory of the member, who have been authorised by all the other members of the JV, so that the Bid is legally binding on all members.

b) One of the members shall be designated as leader who shall have the authority to conduct all business for and behalf of any and all members of the JV; this authorisation shall be evidenced by submitting with the Bid a power of attorney signed by legally authorised signatories of the other members.

c) The leader shall be authorised to receive instructions for and on behalf of any and all members of the JV and the entire execution of the Contract, including payment, shall be done exclusively with the leader.

d) All members of the JV shall be liable jointly and severally for the execution of the Contract in accordance with its terms.

e) A copy of the agreement entered into by the JV members as per the format provided in the Bidding Documents shall be submitted with the Bid.

ITB.7.2. In order for JV to qualify, either the lead partner must meet the minimum technical qualification requirements or the technical qualification requirement can be met jointly by the JV partners, if so, specified in the BDS.

ITB.7.3. The financial qualification requirements however may be met jointly by the members of the JV subject to the condition that each member can independently meet at least the minimum financial qualification requirements as specified in the BDS. Failure to comply with this requirement will result in rejection of the JVs Bid.

ITB.7.4. A firm can be a member in only one JV; Bids submitted by JVs including the same firm as member in more than one JV in the same bidding process will be rejected.

ITB. 8. Responsibility of Bidders

ITB.8.1. KHPL will not assume any responsibility regarding information gathered, interpretations or conclusions made by the Bidder or regarding information, interpretations or deductions the Bidder may derive from the data or any report furnished by KHPL. Verbal communication or conversation with any officer, employee of KHPL either before or after the submission of Bid shall not affect or modify any of the terms or obligations contained herein.

ITB.8.2. It shall be the sole responsibility of Bidders to determine and to satisfy themselves by such means as they consider necessary or desirable as to all matters pertaining to this bidding process including in particular all factors that may affect the performance of the Contract in the event of award.

B. The Bidding Documents

ITB. 9. Contents of Bidding Document

ITB.9.1. The scope of Work, bidding procedures, Contract terms and conditions and technical specifications are prescribed in the Bidding Documents. The set of Bidding Documents for the purpose of bidding includes the sections stated below together with any addendum/amendment to be issued in accordance with ITB. 13

Section I	:	Notice Inviting Tender	
Section II	:	Instructions to Bidders	
Section III	:	Bid Data Sheet (BDS)	
Section IV	:	General Conditions of Contract (GCC)	
Section V	:	Special Conditions of Contract (SCC)	
Section VI	:	Technical Specifications and Drawings	
Section VII	:	Forms	
Section VII A	**:**	**Bidding Forms**	
		1.	Bid Security Form – Bank Guarantee
		2.	Certificate regarding acceptance of important conditions
		3.	Integrity Pact Statement
		4.	Bidders Information Form
		5A.	Power of Attorney
		5B.	Power of Attorney by JV partner in favour of Lead partner
		6a.	Financial Details of Bidder
		6b.	Details of Financial Capacity Status
		6c.	Present Order Book Position
		6d.	Past Performance Data

		6e.	Data regarding Key Personnel
		6f.	Brief write up regarding Construction Methodology & Project Management
		7.	Equipment/ Machinery Deployment Schedule
		8.	Details of proposed Subcontractors
		9.	Self-declaration regarding affirming eligibility of Bidder
		10.	Form of Joint Venture Agreement
		11A.	Deviation Schedule of Technical Bid
		11B.	Deviation Schedule of Financial Bid
		12.	Quality Assurance Program
		13.	Form for any other additional information
		14.	Bid Submission Form
		15.	Bill of Quantities
Section VIIB	**:**	**Contract Forms**	
		16.	Letter of Award
		17.	Contract Agreement
		18.	Bank Guarantee Form for Contract Performance Security
		19.	Bank Guarantee Form for Advance Payment

ITB.9.2. The Bidder is expected to examine all instructions, forms, terms, conditions, specifications and other information in the Bidding Documents. Failure to furnish all information and documents required as per the Bidding Documents or submission of a Bid not substantially responsive to the Bidding Documents in every respect will be at the Bidder's risk and may result in rejection of his Bid.

ITB. 10. Clarifications on Bidding Documents

ITB.10.1. The Bidder shall examine the Bidding Documents thoroughly in all respects and if any conflict, discrepancy, error or omission is observed, Bidder may request clarification promptly. A prospective Bidder requiring any clarification on Bidding Documents may notify KHPL in writing by post or fax or e-mail, to the address mentioned in BDS, not later than the date and time specified in BDS.

ITB.10.2. KHPL will issue clarification(s) as it may think fit in writing not later than fifteen (15) days prior to the deadline/ extended deadline for submission of Bids prescribed by KHPL. All such clarifications shall form part of the Bidding Documents and shall accompany the Bidder's Proposal. Copies of KHPL's response (including an explanation of the query but without identifying its source) will be sent to all prospective Bidders who have registered with KHPL for the work.

ITB.10.3. For the information of Bidders, the clarifications shall also be uploaded on the website. The Bidders are advised to visit the website of the company from time to time in their own interest.

ITB.10.4. Bidders shall not be allowed to seek any clarification of the Bidding Documents in person or by telephone or other verbal means. Any queries sent by the Bidders after the date and time notified as per BDS or extended date, if any, shall not be entertained.

ITB.10.5. Should KHPL deem it necessary to amend the Bidding Documents as a result of a clarification, it shall do so following the procedure under ITB. 13.

ITB.10.6. Any failure by the Bidder to comply with the aforesaid requirement shall not excuse the Bidder for performing the Works in accordance with the Contract, in case of award.

ITB. 11. Site Visit and Familiarization with Local Laws

ITB.11.1. The Bidder is advised to visit and examine the Site and its surroundings where the Works are to be executed and obtain for itself on its own responsibility and risk, all information that may be necessary for preparing the Bid and entering into a Contract for execution of the Works. The costs of visiting the Site shall be borne by the Bidder fully. KHPL shall facilitate the Site visit, and Bidder is required to furnish advance intimation of his Site visit.

ITB.11.2. The Bidder shall acquaint himself with the adequacy of local conditions and requirements including but not limited to the approach roads to the Site, adequacy of existing culverts,

Khorlochhu Hydro Power Ltd.

bridges and roads for the expected traffic, water and power supply, nature of ground and sub-soil conditions, water table level, river regime, river water levels and other details, geological and climatic conditions, local terrain, availability of labour and construction material, communication facilities, utility and labour conditions and shall not claim at any time after submission of the Bid or during the execution of the Contract that there was any lack of understanding with regard to the conditions imposed in the Contract or prevailing at the Site.

ITB.11.3. In their own interest, the Bidders are required to familiarise themselves with the Income Tax Act, prevailing labour laws including laws and regulations governing engagement of labour for employment and deployment at Site & other related Acts and Laws prevalent in the Kingdom of Bhutan. Further, the Bidders are required to comply with these Acts/Laws and other relevant provisions particularly with reference to the execution of the Works.

ITB.11.4. The Bidder and any of its personnel or agents will be granted permission by KHPL to enter upon its premises and lands for the purpose of such inspection, but only upon the express condition that the Bidder, its personnel and agents shall release and indemnify KHPL and its personnel and agents from and against all liability in respect thereof and shall be responsible for death or personal injury (whether fatal or otherwise), loss of or damage to property and any other loss, damage, costs and expenses howsoever caused and incurred as a result of the inspection.

ITB. 12. Pre-Bid Meeting

ITB.12.1. A pre-bid meeting shall be conducted only if necessary to clarify doubts and concerns of the Bidders prior to submission of Bids. The Bidders who have registered with KHPL for the work shall be invited to attend pre-bid meeting to be held on the date, time and location specified in BDS.

ITB.12.2. Non-attendance at the pre-bid meeting will not be a cause for disqualification of Bidders but at the same time shall not entitle them to raise any query at a later date.

ITB.12.3. The Bidders are requested to submit their questions and queries in writing to reach KHPL not later than one week before the meeting. Clarifications to the queries raised in the pre-bid meeting, including the text of the questions raised without identifying the source, and the responses given together with any responses prepared after the meeting, shall be circulated to all registered bidders and also uploaded in KHPL website.

ITB.12.4. Any modification to the Bidding Documents that may become necessary as a result of the pre-bid meeting shall be made by KHPL through the issue of an addendum pursuant to ITB. 13 and not through the clarifications to the queries of pre bid meeting.

ITB. 13. Amendment of Bidding Documents

ITB.13.1. At any time after the NIT date, but not later than fifteen (15) days prior to the deadline for submission of Bids, KHPL may amend the Bidding Documents by issuing an addendum/amendment. This may be done either on KHPL's own initiative or in response to clarification requests from any prospective Bidder who have registered with KHPL, provided such request is received by the date specified in the BDS.

ITB.13.2. The addendum/ amendments/corrigendum will be sent in writing to all the prospective Bidders who have registered with KHPL for the tender. KHPL shall in no way be responsible for any ignorance of the Bidder about the amendment to the Bidding Documents.

ITB.13.3. Such addendum/amendment/corrigendum shall be part of the Bidding Documents and binding on the prospective Bidders. KHPL shall assume that the information contained therein have been taken into account by the Bidder in its Bid and shall bear no responsibility or liability arising out of non-receipt of the same in time or otherwise by the Bidder.

ITB.13.4. KHPL may, at its discretion, extend the deadline for submission of Bids pursuant to ITB.26.1 to allow prospective Bidders reasonable time to take the addendum into account in preparation of their Bids.

C. Preparation of Bids

ITB. 14. Cost of bidding

ITB.14.1. The Bidder shall bear all costs, associated with the preparation and submission of his Bid (including Site visits and attending pre-bid meetings) and KHPL in no case shall be responsible or liable for these costs, regardless of the conduct or outcome of the bidding process.

ITB. 15. Language of the Bid and Units of Measure

ITB.15.1. The Bid, and all correspondence and documents related to the Bid shall be in English. Additional/Supporting documents provided by the Bidder related to the Bid shall also be in English and if in any other language, should be translated to English. The English translation shall prevail on the interpretation.

ITB.15.2. The units of measurement shall be metric system unless otherwise specified.

ITB. 16. Alternative Bids

ITB.16.1. Unless otherwise indicated in the BDS, alternative Bids shall not be considered:

a) Option One. A Bidder may submit alternative Bids with the base Bid and KHPL shall only consider the alternative Bids offered by the Bidder whose Bid for the base case was determined to be the lowest-evaluated Bid, or

b) Option Two. A Bidder may submit an alternative Bid with or without a Bid for the base case. All Bids received for the base case, as well as alternative Bids meeting the Technical Specifications as per Section VI, shall be evaluated on their own merits.

ITB.16.2. Alternative Bids shall provide all information necessary for a complete evaluation of the alternative by KHPL, including design calculations, technical specifications, breakdown of prices, proposed construction methods and other relevant details.

ITB.16.3. In case of multiple alternative Bids, KHPL shall evaluate, compare and rank the alternative Bids subject to technical conformance suitability & acceptability in accordance with ITB. 35. In case of single alternative Bid, subject to technical conformance suitability & acceptability and price reasonability, the Bid may be accepted.

ITB. 17. Documents Constituting the Bid

ITB.17.1. The Bid to be prepared and submitted by the Bidder shall consist of the following documents:

ITB.17.2. Envelope I shall contain:

Bid Security in accordance with ITB. 23 and Form: 1 of Section VIIA in case of a Bank Guarantee. Bids accompanied by Bid Security of inadequate value and validity, shall not be entertained; and Envelope II and III of such Bids shall be returned to the Bidder without being opened.

ITB.17.3. Envelope II shall contain:

a. **Integrity Pact Statement** duly executed by the bidder, as per Form: 3 of Section VIIA;

b. **Latest Tax Clearance Certificate** from the tax authority of Bhutan

c. **Valid Trade License, Certification of Incorporation and BCTA Registration Certificate.**

d. No deviation, whatsoever, is permitted by KHPL, to the provisions of the Bidding Documents listed in the BDS. The Bidders are advised that while preparing their Bids and quoting prices, these conditions may appropriately be taken into consideration. Bidders are required to furnish Certificate regarding acceptance of important conditions in accordance with Form: 2 of Section VIIA indicating their compliance to the provisions listed in the BDS;

e. **Bidder's Information Form**, in accordance with Form: 4 of Section VIIA.

f. **Power of Attorney**, in original, as per Form: 5A of Section VIIA authorising that the person(s) signing the Bid has/have the authority to sign the Bid and to make the Bid

Khorlochhu Hydro Power Ltd.

binding upon the Bidder during the full period of its validity in accordance with ITB. 22.

g. **Bidder's Qualification**

In the absence of pre-qualification process, documentary evidence establishing that the Bidder is qualified to perform the Contract, if its Bid is accepted, shall be furnished. The documentary evidence of the Bidder's qualifications to perform the Contract, if its Bid is accepted, shall establish to KHPL's satisfaction that the Bidder has the capacities and capabilities necessary to perform the Contract.

Particulars for meeting the prescribed qualification requirement as per BDS and details for assessment of capacity and capability of Bidder to perform the Contract shall be required as per Form: 6A to Form: 6F of Section VIIA.

h. **Equipment/Machinery Deployment Schedule**

The Bidder shall indicate the quantum and schedule of the equipment/ machinery/lab equipment, etc. he proposes to deploy for the Works to be executed as per Form: 7 of Section VIIA. Such plant and machinery to be deployed shall not be less than the minimum specified in the Technical Specifications.

i. **Subcontractors proposed by the Bidder**

The Bidder shall furnish the names and nationalities of Subcontractors proposed for subcontracting (minimum three for each work proposed to be sub contracted) for the Works which are permitted for subcontracting as per the provisions of SCC, as per Form: 8 of Section VIIA.

The Bidder shall be responsible for ensuring that the Subcontractors proposed for the Works comply with the qualification requirements prescribed in the SCC, for the respective Works. KHPL reserves the right to delete any proposed Subcontractor from the list prior to award of Contract.

j. A self-declaration form as per Form: 9 of Section VIIA affirming the eligibility of the Bidder.

k. Bids submitted by a **Joint Venture**, if so permitted in the BDS, shall furnish a copy of the agreement entered into by the joint venture members as per the form included in Form: 10 of Section VIIA provided in the Bidding Documents.

l. **Signed Bidding Documents**

The BDS, Special Conditions of Contract and Technical Specifications and Drawings including any clarifications and/ or amendments thereto, duly sealed and signed by an authorized signatory of the Bidder as a condition of acceptance.

m. **Deviations**, if any, from the terms, conditions and technical specifications of the Bidding Documents shall be listed as per Form: 11A of Section VIIA. The Bidder shall provide the additional price, if any, for withdrawal of the deviations stated.

n. **Technical Alternative Bids**

Alternative Bids if applicable as per ITB. 16.

o. **Construction Methodology and Project Management** as per Form No. 6F based on the requirements specified in Section VI, Technical Specification.

p. **Quality Assurance Program**

Details regarding the overall quality management & procedures which the Bidder proposes to follow during various phases of execution of the Contract as per Form: 12 of Section VIIA.

q. Any other **additional information**/ document which the Bidder wishes to provide in his Bid as per Form: 13 of Section VIIA.

ITB.17.4. Envelope III shall contain:

a) Bid Submission Form in accordance with Form: 14 of Section VIIA;
b) Priced Bill of Quantities, in accordance with Form: 15 Section VIIA;
c) Alternative Priced Bids if applicable as per ITB. 16;

d) Details regarding Contract Price Adjustment as per SCC.

ITB.17.5. In case where Bids are invited under Single Stage Single Envelope mode, the documents contained in Envelope III shall also be kept in Envelope II.

ITB. 18. Bid Submission Form and Bill of Quantities

ITB.18.1. The Bidder shall submit the Bid Submission Form using the form furnished in Form: 14 of Section VIIA. This form must be completed without any alterations to its text, and no substitutes shall be accepted. All blank spaces shall be filled in with the information requested.

ITB.18.2. The Bidder shall submit the Priced Bill of Quantities using the forms furnished in Form: 15 of Section VIIA.

ITB.18.3. The Bid Form and Priced Bill of Quantities shall be signed as per ITB. 24.

ITB. 19. Bid Prices and Discounts

ITB.19.1. The Bidder shall fill in unit rates/ prices for all items of the Works described in the Bill of Quantities in figures. The unit rates/ prices quoted in the Bill of Quantities shall also be deemed to include any incidentals not shown or specified but reasonably implied or necessary for the proper completion and functioning of the whole specified item of the Works in accordance with the Bidding Documents and shall also deemed to include the cost of construction of infrastructural facilities required for execution of the Contract and not included in the Works. The Contract shall be for the whole Works based on the unit rates and prices in the Priced Bill of Quantities submitted by the Bidder.

ITB.19.2. The unit rates/ prices quoted in the Bill of Quantities shall be inclusive of all taxes, duties, levies & charges payable in the Kingdom of Bhutan (including those levied on the construction material quarried from land owned by KHPL or otherwise), as of thirty (30 days) days prior to the deadline for submission of Bids.

ITB.19.3. The total price at the bottom of the Priced Bill of Quantities shall be indicated both in figures and words.

ITB.19.4. If rebate/discount is offered, the overall discount in percentage shall be brought out in the Priced Bill of Quantities. Conditional rebates/discount, if any, offered by any Bidder shall not be considered during Bid evaluation.

ITB.19.5. The prices and discounts quoted by the Bidder in the Bid Submission Form and in the Priced Bill of Quantities shall conform to the requirements specified below.

ITB.19.6. Items for which no rate or price is entered by the Bidder in the Priced Bill of Quantities shall not be paid by KHPL when executed and shall be deemed covered by the other rates and prices mentioned in the Priced Bill of Quantities.

ITB. 20. Contract Price Adjustment

ITB.20.1. Prices quoted by the Bidder shall be fixed during the Bidder's performance of the Contract and not subject to variation on any account unless otherwise specified in the BDS. A Bid submitted with an adjustable price quotation shall be treated as non-responsive and shall be rejected pursuant to ITB. 32 unless adjustable price quotations are permitted in the BDS.

ITB.20.2. If, in accordance with the BDS, prices quoted by the Bidder are subject to adjustment during the performance of the Contract.

ITB.20.3. The prices quoted by the Bidder shall reflect changes in the cost of labour, material, etc. in accordance with the procedures specified in **Error! Reference source not found.**.

ITB.20.4. A Bid submitted with a fixed price quotation when Bids have been invited with price variation, will not be rejected, but the price adjustment will be treated as zero.

ITB.20.5. The estimated effect of the price adjustment provision applied over the period of execution of the Contract shall not be taken into consideration in Bid evaluation.

ITB.20.6. KHPL shall indicate the name, source and origin of indices along with their base values and corresponding coefficients as per SCC.

ITB. 21. Currencies of Bid

ITB.21.1. The unit rates and prices shall be quoted by the Bidder in Form: 16 of Section VIIA in BTN and the currency of payment shall also be BTN.

ITB. 22. Period of Validity of Bids

ITB.22.1. Bids shall remain valid till the date specified in the BDS. A Bid valid for a shorter period shall be liable for rejection by KHPL as non-responsive.

ITB.22.2. In exceptional circumstances, prior to expiry of the Bid validity period, KHPL may request Bidders to extend the period of validity of their Bids. The request and the responses shall be made in writing to all the participating Bidders. A Bidder may refuse the request to extend the validity of its Bid without forfeiting its Bid Security. In such a case, the Bid of the Bidder, refusing to extend the validity of its Bid, shall not be considered for evaluation and award. A Bidder granting the request will be required to extend the validity of their Bid securities correspondingly but shall not be required or permitted to modify its Bid, except as provided in ITB. 28.

ITB.22.3. The provisions of ITB.23.6 regarding discharge and forfeiture of Bid Security shall continue to apply during the extended period of Bid validity.

ITB. 23. Bid Security

ITB.23.1. The Bidder shall furnish, as part of its Bid, a Bid Security in original form, denominated in the currency and in the amount specified in the BDS.

ITB.23.2. The Bid Security shall:

a) at the Bidder's option, be in any of the following forms:
   i) an irrevocable Bank Guarantee; or
   ii) a Cash Warrant; or
   iii) a Demand Draft;

b) the bank guarantee shall be in favour of KHPL, issued by any Financial Institution of Bhutan, as acceptable to KHPL;

c) in the case of a bank guarantee, be in accordance with the form of Bid Security included in Form: 1 of Section VIIA;

d) be promptly payable upon written demand by KHPL in case any of the conditions listed in ITB.23.6 are invoked;

e) in case of bank guarantee, it should remain valid for a period of thirty (30) days beyond the end of the validity period of the Bid, as extended, if applicable, in accordance with ITB.22.1. Accordingly, the Bid Security shall remain valid till the date specified in the BDS.

ITB.23.3. The Bid Security is to be submitted as a part of the Bid in a separate sealed envelope. Any Bid not accompanied by Bid Security of adequate value and validity shall be rejected by KHPL as non-responsive.

ITB.23.4. No interest shall be paid by KHPL on Bid Security.

ITB.23.5. **Return of Bid Security**

ITB.23.5.1. The Bid Security shall be returned to successful and unsuccessful Bidders as promptly as possible upon signing of Contract and receipt of Contract Performance Security from successful Bidder in accordance with ITB. 41.

ITB.23.5.2. In case of single stage – two envelope mode of tendering, Bid Security of non-responsive Bids shall be returned immediately after technical evaluation.

ITB.23.6. The Bid Security shall be forfeited:

a) if a Bidder withdraws its Bid as a whole or in part during the period of Bid validity specified by the Bidder on the Bid Form, except as provided in ITB.22.1; or if the bidder has been found practicing corrupt or fraudulent or collusive or coercive practices during bidding process

b) if the successful Bidder fails to:

i) accept the correction of its Bid Price pursuant to ITB. 34;

ii) accept the letter of award or fails to sign the Contract in accordance with ITB. 40;

iii) furnish a Contract Performance Security in accordance with ITB. 41;

iv) withdraw the deviations proposed by him in the Bid at the cost of withdrawal mentioned by him in Form: 11A and 11B of Section VIIA of his Bid.

ITB.23.7. The Bid Security of a JV must be in the name of the lead member.

ITB. 24. Signing of Bids

ITB.24.1. The Bidder shall prepare one (1) original and copies (number as specified in BDS) of the complete set of documents constituting the Bid as described in ITB. 17, and clearly mark each as "Original Bid" and 'Copy No: 1', 'Copy No: 2', etc. In the event of any discrepancy between the copies and original Bid, the original shall prevail. The BDS, SCC, Technical Specifications and Drawings including any clarifications/and or amendments thereto, duly sealed and signed by an authorized signatory of the Bidder as a condition of acceptance.

ITB.24.2. The original and all copies of the Bid shall be typed or written in indelible ink and shall be signed by a person/persons duly authorized by the Bidder with official seal as per the power of attorney. However, any published document submitted along with the Bid shall be signed by the authorized signatory (ies) atleast on the first page and last page of such document.

ITB.24.3. A Bid submitted by a JV shall be signed by the authorised signatory of the lead member so as to be legally binding on all members.

ITB.24.4. Any interlineations, erasures, overwriting, cutting or alteration shall only be valid if they are initialed by the authorized signatory (ies) to the Bid.

D. Submission of Bids

ITB. 25. Submission of Bids

ITB.25.1. Each Bidder, including its Affiliate, shall be permitted to submit only one Bid against any NIT. In case, a Bidder and its Affiliate has submitted separate Bids, against the same NIT, all such Bids shall be rejected.

ITB.25.2. Bids shall be delivered by hand, courier or registered post so as to reach KHPL at the address specified in BDS on or before the date and time mentioned in BDS. Bids submitted by telex / telegram / fax / e-mail shall not be considered under any circumstances. KHPL shall not be responsible for any delay in receipt of the Bid.

ITB.25.3. In case of hand delivery, Bids shall be deposited in a sealed Tender Box (if specified in the BDS) or handed over to the Nodal officer at the address as specified in BDS.

ITB.25.4. Bids shall be submitted in the manner specified in the BDS as under:

ITB.25.5. Bids are to be submitted in a single closed Cover Envelope containing Envelope I and Envelope II (in case of Single Stage Single Envelope) or Envelope I, Envelope II and Envelop III (in case of Single Stage Two Envelope) with superscription on each envelope as specified in the BDS.

ITB.25.6. All envelopes shall be sealed with adhesive or other sealant to prevent reopening and be signed across their seals by the person authorized to sign the Bid on behalf of the Bidder.

ITB.25.7. If the envelopes are not sealed and marked as above, KHPL shall assume no responsibility for the misplacement or premature opening of the Bid.

ITB.25.8. When so specified in the BDS, Bidders shall have the option of submitting their Bids electronically. Bidders submitting Bids electronically shall follow the procedures specified in the BDS.

ITB. 26. Deadline for Submission of Bids

ITB.26.1. Bids must be received by KHPL in accordance with ITB. 25. In the event of the specified date for submission of Bids being declared a holiday for KHPL, the Bids will be received up to the specified time on the next working day. Such postponement of date will not have any impact on the other dates specified in the Bidding Documents (i.e. Bid validity and validity of Bid Security).

ITB.26.2. KHPL may, extend the deadline for the submission of Bids/ opening of Bids by issuing an addendum and hosting the same on the website, in which case all rights and obligations of KHPL and the Bidders previously subject to the original deadline shall thereafter be subject to the deadline as extended.

ITB.26.3. In the event, the deadline for submission of Bid is extended by KHPL, the Bidders who have already submitted their Bids within the original deadline of submission shall have the option to submit their revised Bid in substitution either in full or in part of earlier Bid. In the absence of a revised Bid, the original Bid shall be considered for opening and subsequent evaluation if otherwise in order. Wherever, the Bidder has submitted the revised Bid in modification of earlier Bid, the earlier Bid shall be returned unopened to the Bidder.

ITB. 27. Late Bids

ITB.27.1. Any Bid received by KHPL after the Bid submission deadline as per ITB. 26 will be declared late, rejected and returned unopened to the Bidder.

ITB. 28. Withdrawal, Substitution or Modification of Bids

ITB.28.1. A Bidder may withdraw, substitute or modify its Bid after it has been submitted by sending a written withdrawal/ substitution/ modification notice prior to the deadline for submission of Bids, duly signed by an authorized representative, including a copy of the authorization as per the power of attorney. The Bid requested to be withdrawn shall be returned unopened to the Bidder.

ITB.28.2. The withdrawal, substitution or modification of the Bid must accompany the respective written notice and must be:

a) submitted in accordance with ITB. 25 and, in addition, the respective cover envelopes shall be clearly marked "WITHDRAWAL" "SUBSTITUTION" or "MODIFICATION;" and

b) received by KHPL prior to the deadline prescribed for submission of Bids, in accordance with ITB. 26.

ITB.28.3. No Bid may be withdrawn, substituted or modified in the interval between the deadline for submission of Bids and the expiry of the period of Bid validity specified by KHPL in ITB.22.1 or any extension there of pursuant to ITB.22.1.

ITB.28.4. Withdrawal, substitution or modification of a Bid between the deadline for submission of Bids and expiration of the period of Bid validity (or any extension thereto) shall result in the forfeiture of the Bid Security pursuant to ITB.23.6. If the lowest or the lowest evaluated Bidder withdraws his Bid between the periods specified pursuant to ITB.28.3, the Bid Security of the Bidder shall be forfeited.

E. Bid Opening, Evaluation and Comparison

ITB. 29. Bid Opening

ITB.29.1. KHPL shall conduct the Bid opening at the address, date and time specified in the BDS. Any specific electronic Bid Opening procedures required if electronic bidding is permitted shall be as specified in the BDS.

ITB.29.2. Bidders or their authorized representatives (not more than two) who have submitted the Bids shall be allowed to attend the Bid opening. Bidders who choose to attend shall sign the attendance sheet provided in the record of Bid opening with their name designation, firm name and phone number or any other particulars as may be required. Bidders who chose to attend the opening shall not be allowed to speak on matters related to the Bid until and unless

Khorlochhu Hydro Power Ltd.

required by the committee members or by seeking permission from the Chairperson by raising hand. Bidders who have any complain with regard to the Bid opening shall write in the complaint sheet and duly sign the sheet.

ITB.29.3. The written withdrawal notice duly signed by an authorized representative of the Bidder for withdrawal of Bids, if any, shall be read out and such Bids shall be returned to the Bidder unopened.

ITB.29.4. Written substitution/modification notice duly signed by an authorized representative of the Bidder in accordance with ITB.28.1 shall be read out and corresponding cover envelopes marked "SUBSTITUTION"/ "MODIFICATION" shall be opened. Substituted Bids shall be exchanged with the corresponding Bid being substituted, which shall not be opened, but returned to the Bidder. In case of single stage two envelope system, technical and financial modifications shall be submitted sealed in two separate envelopes.

ITB.29.5. The following information shall be publicly announced during the Bid opening for the Bidders to note:

a) The name of the Bidder;
b) The presence or absence of Bid Security and its amount;
c) The total price offered (applicable for Single Stage Single Envelope);
d) Discounts offered, (applicable for Single Stage Single Envelope);
e) Alternative Bids, if any;
f) Such other details as KHPL may consider appropriate.

ITB.29.6. KHPL shall prepare a record of the Bid Opening, which shall include the information disclosed to those present. The record of the Bid Opening shall include, as a minimum:

a) the NIT title and reference number;
b) the Bid submission deadline date and time;
c) the date, time and place of Bid opening;
d) Bid prices, offered by the Bidders, including any discounts (applicable for single stage single envelop);
e) the presence or absence of Bid Security and, if present, its amount;
f) the name of each Bidder;
g) the names and signature of attendees at the Bid opening, and name of the Bidders they represent (if any);
h) details of any complaints or other comments made by attendees/ representatives attending the Bid opening, including the names and signatures of the attendees/representatives making the complaint(s) and/or comment(s); and
i) the names, designations and signatures of the members of the Bid Opening Committee.

ITB.29.7. The Bidders' representatives who are present shall be requested to sign the record. The omission of a Bidder's representatives' signature on the record shall not invalidate the contents and effect of the record.

ITB.29.8. The Bid form including appendices to Bid form, Bill of Quantities, Price Schedules, Bid Securities, any discounts offered, and any other important documents shall be initialled by all members of the Bid Opening Committee/Tender Committee. All corrections/overwriting will be noted and recorded on each page of the Bill of Quantities. The Bid evaluation will be done using the copies while the original will be kept in safe custody.

ITB.29.9. In the case of Single Stage Two Envelope Bids, on the deadline for submission of Bid the non-financial Bid shall only be opened. The date for opening of the Price Bid shall be intimated at the appropriate time to the Bidders who's Bid is found responsive in the techno-commercial evaluation. The Bid shall be opened on the date and time so specified in the presence of representatives of the Bidder. During the Price Bid opening the following information shall be publicly announced for the Bidders to note:

a) The name of the Bidder;
b) The total price offered;
c) Discounts offered;
d) Alternative Bids, if any;
e) Such other details as KHPL may consider appropriate.

ITB. 30. Confidentiality

ITB.30.1. Except as may be required by law, information relating to the examination, clarification, evaluation, comparison and post-qualification of Bids, and recommendation of Contract Award, or any other matter concerning the Bid shall not be disclosed to Bidders or any other persons not officially concerned with such process after the public opening of the Bids until issuance of the Letter of Award.

ITB.30.2. Subject to ITB. 31, no Bidder shall contact KHPL on any matter related to its Bid from the time of the opening of the Bid to the time the Contract is awarded. Any attempt by a Bidder to influence KHPL in the examination, evaluation, comparison and post-qualification of the Bids or Contract award decisions may result in the rejection of its Bid.

ITB.30.3. Notwithstanding ITB.30.1, from the time of Bid opening to the time of Contract award, if any Bidder wishes to contact KHPL on any matter related to the bidding process, it should do so in writing.

ITB.30.4. The Bidder shall not communicate or use in advertising, publicity or in any other medium, photographs of the Works under this Contract, or description of the Site, dimension, quantity, quality or other information, concerning the Works unless prior written permission has been obtained from KHPL.

ITB.30.5. All documents, correspondence, decisions and other matters concerning the Contract shall be considered of confidential and restricted nature by the Bidder and he shall not divulge or allow access thereto by any unauthorised persons.

ITB. 31. Clarification of Bids

ITB.31.1. To assist in the examination, evaluation, comparison and post-qualification of the Bids, KHPL may, at its discretion, ask any Bidder for a clarification on its Bid including justification and breakup of the rates quoted. Any clarification submitted by a Bidder that is not in response to a request by KHPL shall not be considered. The documents/information so submitted in response to KHPL request shall be as of the date prior to the date of the bid submission. Events occurring after the date of submission of the bid shall not be considered for evaluation of the Bid. KHPL's request for clarification and the response thereto shall be in writing. KHPL may also seek any document in support of meeting the Qualification Requirements only for those mentioned in the Bid.

ITB.31.2. No change in the prices or substance of the Bid shall be sought, offered or permitted, except to confirm the correction of arithmetic errors discovered by KHPL in the evaluation of the Bids, in accordance with ITB. 34.

ITB.31.3. If a Bidder does not provide clarifications/documents of its Bid by the date and time set in KHPL's request for clarification, its Bid may be rejected.

ITB. 32. Responsiveness of Bids

ITB.32.1. For the purpose of this clause, a substantially responsive Bid is one which conforms to all the terms, conditions and specifications of the Bidding Documents without material deviation, reservation, objection, conditionality or omission.

ITB.32.2. KHPL shall examine the Bid to confirm that the bid is substantially responsive and all terms and conditions specified in the Bidding Documents have been accepted by the Bidder without any material deviation, reservation, objection, conditionality or omission. KHPL's determination of a Bid's responsiveness shall be based on the contents of the Bid itself without recourse to extrinsic evidence.

ITB.32.3. A material deviation, reservation, objection, conditionality or omission is one that:

a) affects in any substantial way the scope, quality or performance of Contract; or

b) limits in any substantial way or is inconsistent with the Bidding Documents, KHPL's rights or the Bidder's obligations under the proposed Contract; or

c) if rectified would affect unfairly the competitive position of other Bidders presenting responsive Bids; or

d) is incomplete or does not include all the scope of Work covered in the technical specifications.

ITB.32.4. If a Bid is not substantially responsive to the requirements of the Bidding Documents, it shall be rejected by KHPL and the same cannot subsequently be made responsive by the Bidder by correction of the material deviation, reservation, conditionality or omission.

ITB.32.5. KHPL may waive any minor infirmity, non-conformity or irregularity in a Bid that does not constitute a material deviation, reservation or omission, whether or not identified by the Bidder in its Bid and that does not prejudice or affect the relative ranking of any Bidder, as a result of the technical and commercial evaluation pursuant to ITB. 33 and ITB. 35. KHPL may request that the Bidder submit the necessary information or documentation, within a reasonable period of time, to rectify non-material deviations or omissions in the Bid related to documentation requirements. Such omission shall not be related to any aspect of the price of the Bid. Failure of the Bidder to comply with the request may result in the rejection of the Bid.

ITB. 33. Technical Evaluation

ITB.33.1. KHPL will carry out a detailed technical evaluation of the Bids previously determined to be substantially responsive as per ITB. 32 in order to determine whether the technical aspects are in accordance with the requirements set forth in the Bidding Documents. In order to reach such a determination, KHPL will examine and compare the technical aspects of the bids on the basis of the information supplied by the Bidders, taking into account the following factors:

a) overall completeness and compliance with the Technical Specifications and Drawings as specified in Section VI, Technical Specification; deviations from the Technical Specifications as identified as per ITB.17.3 (m) to the Bid; suitability of the Works/ services offered in relation to the environmental and climatic conditions prevailing at the Site. The Bid that does not meet minimum acceptable standards of completeness, consistency and detail will be rejected for non-responsiveness;

b) where alternative Bid have been allowed in accordance with ITB 16, and offered by the Bidder, KHPL will make a similar evaluation of the alternatives. Where alternatives have not been allowed but have been offered, they shall be ignored.

ITB.33.2. At the time of award of Contract, if so desired by the KHPL the Bidder shall withdraw these deviations listed in Form 11 of Section VIIA at the cost of withdrawal stated by him in the Bid. In case the bidder does not withdraw the deviations proposed by him, if any, at the cost of withdrawal stated in the Bid, his Bid will be rejected and bid security forfeited.

ITB. 34. Correction of Arithmetical Errors in Price Bid

ITB.34.1. Arithmetical errors will be corrected at the time of evaluation of Price Bid and the corrected figure will be considered as evaluated Bid price. The corrections in the Bid price shall be done as per the provisions of this clause and shall be binding on the Bidder. If the Bidder does not accept the correction of errors as per the provisions of this clause, the Bid will be rejected and the Bid Security will be forfeited.

ITB.34.2. If there is a discrepancy between the product of unit price and quantity for any item, and the total price for such item, the product of unit price and quantity will prevail and the total price shall be corrected unless in the opinion of KHPL, there is an obviously gross misplacement of decimal point in the unit rate, or ignoring to put any zero or putting any extra Zero in the unit price in which case, the total of line item as quoted will govern and unit rate will be corrected accordingly.

ITB.34.3. If there is discrepancy between summation of subtotals and total price, the summation of subtotal price shall prevail, and the total price shall be corrected.

ITB.34.4. If there is a discrepancy between words and figure of the total price for each item, wherever the Bid document requires the figures to be written in both words and figures, the amount in words will prevail unless the amount expressed in word has an arithmetic error.

ITB.34.5. In case the Bidder has not filled up unit price against any item, KHPL shall treat the price of unfilled items as zero for the purpose of evaluation & comparison and award (if such Bidder emerges as the lowest evaluated Bidder), with the assumption that the cost have been absorbed elsewhere in the Price Bid.

ITB.34.6. In case price for any specific item is given by a Bidder as lump sum instead of unit rates as required, KHPL reserves the right to arrive at unit rate on the basis of dividing the quoted lump sum amount by the specified quantity in the Bill of Quantity. In case of multiple items if the Bidder has quoted a lump sum price, in the event such Bidder is declared successful, the break-up of unit prices shall be discussed and agreed during the pre-award discussions with the Bidder subject to the lump-sum amount as quoted by the Bidder, and the break-up as agreed shall form part of the Letter of Award.

ITB. 35. Evaluation and Comparison of Bids

ITB.35.1. KHPL shall evaluate each Bid, which has been determined, to be substantially responsive in terms of ITB. 32 and ITB. 33, and Bidders meet the qualification criteria. The evaluation of bids shall be done based on the factors, methodologies and criteria defined in ITB. 35.

ITB.35.2. To evaluate and compare Bids, KHPL shall consider the following:

a) the Bid Price, as quoted in accordance with ITB. 19 in the priced Bill of Quantities;

b) price adjustment for correction of arithmetic errors in accordance with ITB. 34;

c) price adjustment due to discounts offered in accordance with ITB.19.3;

d) The cost of withdrawal of declared deviations as per Form: 11B of Section VIIA and in accordance with ITB.35.3;

ITB.35.3. KHPL's evaluation of a bid shall exclude and not take into account any allowance for price adjustment during the period of execution of the Contract, if provided in the Bid.

ITB.35.4. The evaluation shall be based on the evaluated cost of fulfilling the Contract in compliance with all commercial, contractual and technical obligations under the Bidding Documents. In arriving at the evaluated cost, the price for withdrawal of deviations shown in Form: 11B of Section VIIA of the Bid will be used. Where necessary, if cost of withdrawal of any deviation is not given in Form: 11B of Section VIIA, the KHPL will make its own assessment of the cost of such a deviation for the purpose of ensuring fair comparison of Bids.

ITB.35.5. The total comparison price shall be calculated based on ITB.35.1. KHPL shall compare the total comparison price of all substantially responsive Bids of qualified Bidders to determine the lowest evaluated Bid.

ITB.35.6. If the Bid price of the lowest evaluated Bid appears abnormally low and/or seriously unbalanced KHPL may require the Bidder to produce written explanations of, justifications and detailed price analysis for any or all items of the Bill of Quantities to demonstrate the internal consistency of those prices with the construction methods and schedule proposed. Abnormally low Bid may or may not be accepted. If KHPL decides to accept the abnormally low Bid /or the bid with serious unbalanced rates after considering the above, the Bidder shall be required to provide additional differential security in addition to the Performance Security equivalent to the difference between the estimated and quoted price to a maximum of (ten percent) 10% of the quoted price, to protect KHPL against any financial loss in the event of default of the successful Bidder under the Contract. If the prices of all the received bids are abnormally high in the discretion of the KHPL, then the KHPL may seek justification from the bidder for the high rates and if necessary negotiate with the lowest evaluated bidder and may reject the bid if considered to be abnormally higher than the estimated cost.

ITB.35.7. The basic consideration and the essence of the Contract shall be the strict adherence to the time schedule specified in the SCC after the Effective Date of the Contract as incorporated in the Contract Agreement for completion of Works. Bidders are required to base their prices

on the time schedule given in Section VI, Technical Specifications. No credit will be given for earlier completion for the purpose of evaluation.

ITB.35.8. KHPL reserves the right to accept or reject any variation, deviation. Variations, deviations, alternative offers and other factors which are in excess of the requirements of the Bidding Documents or otherwise result in unsolicited benefits for KHPL shall not be taken into account in Bid evaluation.

ITB. 36. Post-qualification of the Bidder

ITB.36.1. KHPL shall determine to its satisfaction whether the Bidder- is qualified in terms of the qualification requirements stipulated in the BDS and have capacity and capability to perform the Contract.

ITB.36.2. The determination shall be based upon an examination of the documentary evidence, including its authenticity, of the Bidder's qualifications and capacity & capability, submitted by the Bidder as per Form: 6A to 6F of Section VIIA as well as such other information as the KHPL deems necessary and appropriate.

ITB. 37. KHPL's Right to Accept any Bid, and to Reject any or All Bids

ITB.37.1. KHPL reserves the right to accept or reject any Bid, and to annul the bidding process and reject all Bids at any time prior to Contract award, without thereby incurring any liability to Bidders or any obligation to inform the affected Bidders of the grounds for such action of the KHPL.

F. Award of Contract

ITB. 38. Award Criteria

ITB.38.1. Subject to ITB. 35 and ITB. 36, KHPL will award the Contract to the successful Bidder whose Bid has been determined to be substantially responsive and to be the lowest evaluated Bid based on Bid evaluation and the Bidder meets the standards of capability and financial resources as provided in the Bidding Documents. KHPL shall be the sole judge in this regard.

ITB. 39. Notification of Award

ITB.39.1. Prior to expiry of the period of Bid validity, KHPL will notify the successful Bidder, by a Notification of Award as per Form: 16 of Section VIIB or in the form of letter of intent (LOI)/Letter of Award in writing that its Bid has been accepted indicating the award price. The successful bidder shall return a copy of the Letter of Award to KHPL after duly recording "Accepted Unconditionally" under the signature of the authorised signatory within seven (7) days of the date of Letter of Award and submit the Contract Performance Security.

ITB.39.2. Until a formal Contract is prepared and executed, the Letter of Award shall constitute a binding Contract between the successful Bidder and KHPL.

ITB.39.3. Upon the successful Bidder's furnishing of the Performance Security pursuant to ITB. 41, KHPL will promptly notify each unsuccessful Bidder and will return its Bid Security.

ITB. 40. Signing of Contract Agreement

ITB.40.1. Upon accepting the unconditional "Letter of Award" the successful bidder will submit the Performance Security to KHPL within 15 days of Letter of Award.

ITB.40.2. After the successful Bidder has submitted the Contract Performance Security, KHPL shall send the successful Bidder the Contract Agreement as per Form: 17 of Section VIIB.

ITB.40.3. Within seven (7) days of receipt of Contract Agreement, the successful Bidder shall sign, date and return the Contract Agreement to KHPL.

ITB. 41. Contract Performance Security

ITB.41.1. The successful Bidder shall submit the Performance Security equal to ten percent (10%) of the Contract Price in accordance with **Error! Reference source not found.**.The Performance Security shall be valid till thirty (30) days beyond the Defect Liability Period. KHPL reserves

the right to verify independently the genuineness of the Performance Security from the issuing bank in Bhutan.

ITB.41.2. The Performance Security shall be submitted as an irrevocable bank guarantee in the form provided for in Form: 18 of Section VIIB. The Performance Security can also be submitted in the form of demand draft if so specified in the BDS.

ITB.41.3. Failure of the successful Bidder to submit the above-mentioned Performance Security or accept the award or sign the Contract shall constitute sufficient grounds for the annulment of the award and forfeiture of the Bid Security. In that event KHPL may award the Contract to the next lowest evaluated Bidder whose offer is substantially responsive and is determined by KHPL to be qualified to perform the Contract satisfactorily or call for fresh bids.

ITB.41.4. The validity of the Performance Security shall be extended by the successful bidder whenever any time extension for contract completion is granted by KHPL.

ITB.41.5. If the contractor fails to remedy any reported defect within the Defect Liability Period, the KHPL shall be entitled to remedy the defect at the expense of the successful Bidder and appropriate the cost of such remedying defects out of the Performance Security.

ITB.41.6. On completion of the Defects Liability Period, the Engineer In-charge shall issue a no Defect Liability Certificate to the contractor and release the retention money and/ or bank guarantee as available within fourteen (14) days from the issue of certificate.

ITB. 42. Retention Money

ITB.42.1. In the case of large Value Contracts also, if the Executed Contract value exceeds Contract Value, then Retention Money of 10% of the exceeded amount in addition to the Performance security already submitted shall be deducted from the running bills and retained till the end of the Defect Liability Period.

ITB.42.2. The Retention Money or part thereof may be returned to the contractor on completion of the Defect Liability Period. After completion of the work, the retention money may be returned to the contractor against his submission of an bank guarantee, acceptable to the Procuring agency. Such bank guarantee shall be valid until the issue of a No Defect Liability Certificate.

ITB.42.3. If the contractor fails to remedy any reported defect within the Defects Liability Period, the KHPL shall withhold the payment or realize claims from the Retention Money, of an amount, which in the opinion of the KHPL, represent the cost of the defects to be remedied

ITB.42.4. On completion of the Defects Liability Period, the Engineer In-charge shall issue a no Defect Liability Certificate to the contractor and release the retention money and/ or bank guarantee as available within fourteen (14) days from the issue of certificate.

SECTION III – BID DATA SHEET

BID DATA SHEET

The following Bid specific data for the Works to be procured shall amend and/or supplement the clauses in the Instructions to Bidders (ITB). Whenever there is a conflict, the provisions herein shall prevail over those in the ITB.

BDS Item No	ITB Clause Ref., if any	Data
A. INTRODUCTION		
1.	ITB. 2	KHPL intends to finance this procurement through: ***Internal Funding***
2.	ITB.7.1 and ITB.17.3 (k)	Whether Joint Venture Bids are permitted: ***Not Permitted***
3.	ITB.7.2 and ITB.7.2	The lead member of JV (if allowed) must meet at least ….. [*insert %age*] of technical and ……[*insert %age*] of financial requirement. ***Not Applicable***
B. THE BIDDING DOCUMENTS		
4.	ITB.10.1, ITB.10.3 and ITB.13.1	Clarifications on Bidding Documents may be obtained from: General Manager, Contracts & Procurement Division, Khorlochhu Hydro Power Limited, Corporate Office, Doksum New Township, Trashiyangtse Email: gm.cnp@khpl.bt Date & Time up to which clarification requests will be received: **Up to August 28, 2026 by 17:00 Hours (BST)**
5.	ITB.12.1	Pre-bid Meeting: ***No Pre-Bid Meeting shall be held.***
C. PREPARATION OF BIDS		
6.	ITB.16.1	Alternative Bids ***"shall not be"*** permitted
7.	ITB.17.3 (d)	Deviation to any of these clauses anywhere in the Bid shall not be permitted: i) Governing Laws **Error! Reference source not found.** ii) Settlement of Disputes 2 iii) Contract Performance Security **Error! Reference source not found.** iv) Patent Indemnity **Error! Reference source not found.** v) Defect Liability **Error! Reference source not found.** vi) Limitations of Liability **Error! Reference source not found.** vii) Time for Commencement and Completion
8.	ITB.17.3 (f) and (h)	In addition to the requirements specified in ITB.17.3 (f) the following Qualifying Requirement must be met by the Bidder: **(A) Technical** (i) Aggregate size of each similar work (two similar works) or size of the largest similar work executed by the Bidder in the last 3 (three) years shall be **BTN 110.50 million.** The bidder shall submit the Completion Certificate issued and/or duly certified by the Client. (ii) The essential construction equipment to be made available for the Contract by the Bidder shall be:

Sl. No.	Description of Equipment	Min. Required
1	Excavator with Rock Breaker (PC 200 or higher)	1 No.
2	Excavator without Rock Breaker (PC 200 or higher)	1 No.

BDS Item No	ITB Clause Ref., if any	Data

3	Dumper/Tripper	3 Nos.
4	Concrete Mixer	1 No.
5	Transit Mixer	1 No.

**The listed equipment is the minimum requirement either owned or hired. The document to prove the ownership of the equipment shall be submitted. If proposed to be hired from others, then the Bidders should submit hire deeds valid till the duration of the project period along with the registration details/blue book copies.*

(iii) The skilled and experienced manpower required for the timely and quality execution of the work to be made available for the Contract by the Bidder shall be:

Sl. No.	Qualification & Experience	Nos. Required
1	**Project Manager (**Degree) with min. 5 years working experience in similar works.	1 No.
2	**Project Engineer** (Degree with min. 5 years working experience or Diploma with min. 7 years working experience in similar works)	1 No.
3	**Electrical Engineer** (Degree with minimum of min. 3 or Diploma with min. 5 years working experience in similar works)**.**	1 No.
4	**Safety/OHS Officer** (Degree and/or certified in compliance to requirement of DoL, MoICE)	1 No.
5	**Site Supervisor** (VTI/TVET certificate holders with experience in similar works)	2 Nos.

**The Bidder shall submit the CV along with educational qualification certificates and reference for proof of work experience shall be submitted.*

(iv) The Bidder shall submit the past history of litigation for a period of last five years, which shall comprise the contracts both completed and under execution.

(B) Financial

(i) **Net-worth of the Bidder** for the last two financial years immediately preceding the date of Bid Opening shall be positive.

(ii) **Average Annual Turnover** of the 3 (three) highest Annual Turnover for the last 5 (five) financial years immediately preceding the last date of Bid submission shall be equal to: **BTN 74.00 million**

In case where the bidders do not have the operations for the no. of completed financial years as prescribed above , the annual turnover of the bidder for the completed financial years immediately preceding the last date for submission of Bids based on audited accounts as available shall be considered but for the purpose of calculation of the average annual turnover, the turnover shall be divided by the no. of years prescribed and the figures so obtained shall be compared with the prescribed qualifying requirement.

The value of completed works or turnover for the part of the financial year shall also be considered for the purpose of meeting the qualification criteria in regard to turnover provided the bidder has completed at least its operations for one (1) financial year. The value of completed works for part of the financial year shall be considered based on the certificate issued by the Chartered Accountant. In such cases also, the average annual turnover will be calculated by dividing the turnover for the period available by the no. of years as prescribed.

The Bidder must submit the duly certified copies of the Audited Annual Reports, Profit & Loss Account and DRC/RRCO's CIT Field Assessment Report for the last five financial years. The Bidder's annual turnover shall be evaluated explicitly based on the above documents and the work records as provided in BCTA's CiNET database. Any other qualifying

BDS Item No	ITB Clause Ref., if any	Data
		documents submitted by the bidder other than those listed above including the private works executed by the Bidder but not recorded in either the i) Annual Audited Account; or ii) DRC/RRCO's Tax Field Assessment Report; or iii) in the BCTA's CiNET Database, shall not be considered for assessment and/or evaluation of its bid. (iii) The Bidder must have a credit facility of: **BTN 55.730 million**. **(C) Bid Capacity** The Bid capacity of the Bidder shall be computed as follows: ***Assessed Available Bid Capacity = (A*N*2 – B);*** *Where,* *A = Maximum total value of all Works executed in any one year out of the last five years (updated to the current price level by adding 5% per year);* *N = Time period prescribed for the completion of Work under evaluation i.e. (specify duration in years);* *B = Value of existing commitments and on-going works to be completed.* The assessed Bid capacity of the Bidder should be more than the proposed value of Contract to be awarded. However, where the lowest evaluated bidder irrespective of whether it meets the requirement of bid capacity, if the bidder is having 7 (seven) works in hand pending completion and/or awarded, such bidders shall be deemed not to have the bid capacity to undertake the proposed work and KHPL shall reject the bid of such bidder and consider the next lowest evaluated bidder.
9.	ITB19.2.	The unit rates/prices quoted shall be exclusive of GST but inclusive of all taxes, duties, levies & charges payable in the Kingdom of Bhutan (including those levied on the construction material quarried from land owned by KHPL or otherwise), as of thirty (30 days) days prior to the deadline for submission of Bids.
10.	ITB.20.1 and ITB.20.1	The prices quoted by the Bidder shall be adjustable. Where the prices are required to be quoted with price adjustment, **Error! Reference source not found.** shall be applicable.
11.	ITB.22.1	The Bid shall be valid till: **December 06, 2026**.
12.	ITB.23.1	The amount and currency of the Bid Security shall be: **BTN 2,945,000.00**.
13.	ITB.23.1(d)	The Bid Security shall be valid till: **January 05, 2027**.
14.	ITB.24.1	In addition to the original of the Bid, the number of copies of the Bid required shall be: **1 (one) copy**.
D. SUBMISSION OF BIDS		
15.	ITB.25.1 and ITB.25.2	Bids to be addressed to and submitted to: General Manager, Contracts & Procurement Division, Khorlochhu Hydro Power Limited, Corporate Office, Doksum New Township, Trashiyangtse. Email: gm.cnp@khpl.bt Date & Time up to which Bids will be received: **September 07, 2026, up to 10:30 AM (BST)**
16.	ITB.25.2	Bids shall be deposited in a sealed Tender Box when delivered by hand: **["Yes"]**
17.	ITB.25.3	The Mode of Tendering is: **Single Stage - Single Envelope**

BDS Item No	ITB Clause Ref., if any	Data
18.	ITB.25.4	**1. Single Stage - Single Envelope** **Superscript of Cover Envelope**: **"CONFIDENTIAL"** Bid for the Work "**Construction of Doksum Primary School at Doksum New Township, Trashiyangtse**", bearing Bid Reference No. 06/KHPL/C&PD/INFRA/2026/14619 dated August 07, 2026. Name and Address of Bidder: …….. Not to be Opened before Due Date for Opening on: September 07, 2026, at 11:00 AM (BST). General Manager, Contracts & Procurement Division, Khorlochhu Hydro Power Limited, Corporate Office, Doksum New Township, Trashiyangtse. Phone: +975 172989767, Email: gm.cnp@khpl.bt **Superscript of Envelope 1:** Bid Security for "**Construction of Doksum Primary School at Doksum New Township, Trashiyangtse**", bearing Bid Reference No. 06/KHPL/C&PD/INFRA/2026/14619 dated August 07, 2026. Name of Bidder: …….. **Superscript of Envelope 2:** Bid for the Work "**Construction of Doksum Primary School at Doksum New Township, Trashiyangtse**", bearing Bid Reference No. 06/KHPL/C&PD/INFRA/2025/14619 dated August 07, 2026. Name of Bidder: …….. Not to be Opened Before Due Date for Opening on: **September 07, 2026, at 11:00 AM (BST).**
19.	ITB.25.7	Bidders **["shall not"]** have the option of submitting their Bids electronically.
E. BID OPENING, EVALUATION AND COMPARISON		
20.	ITB.29.1	Venue: **Conference Hall, Corporate Office, KHPL, Doksum New Township, Trashiyangtse** **Date & Time: September 07, 2026, at 11:00 AM (BST)**
F. AWARD OF CONTRACT		
21.	ITB.41.1	The Performance Security shall be submitted in the form of an irrevocable Bank Guarantee or a Demand Draft from a schedule commercial bank in Bhutan.

SECTION IV – GENERAL CONDITIONS OF CONTRACT

1. General Provisions

1.1. Definitions

1.1.1. The following words and expressions shall have the meaning hereby assigned to them except where the context otherwise requires.

(i) Affiliate means business concerns, organizations or individuals that control each other or that are controlled by a common third party. Control may include shared management or ownership; common use of facilities, equipment and resources; or family interests.

(ii) Employer means the Employer including its legal successors and permitted assigns. The term "Employer" and "Employer" are synonymous.

(iii) Bid means an offer to execute Works in accordance with the terms and conditions set out in the bidding documents inviting such offers. The term "tender" is synonymous with the term "bid".

(iv) Bid Data Sheet (BDS) means the proforma sheet, which contains data and information specific to a particular work.

(v) Bidder means an eligible individual, firm, legal entity or joint venture that participates in a competitive bidding process governed by the bidding documents.

(vi) Bidding Document means the set of documents sold or issued by Employer to potential Bidders in which the specifications, terms and conditions of the proposed procurement are prescribed. The terms "Bidding Documents", "Tender Documents" and "Bid Documents" are synonymous.

(vii) Bill of Quantities (BoQ) means summary of the quantities and unit prices of the items of work proposed and agreed under the contract.

(viii) Contract means formal agreement(s) in writing entered into simultaneously between Employer and the Contractor on mutually agreed terms and conditions including the Contract Documents and amendments thereto pursuant to Notification of Award issued by Employer and accepted by the Contractor and which are in compliance with all the relevant provisions of the Governing Law of the Contract as per GCC 1.4.

(ix) Contract Document means the documents referred in Contract Agreement.

(x) Contract Price means the price payable to the Contractor as specified in the Contract Agreement, subject to such additions and adjustments thereto or deductions therefrom as may be made pursuant to the provisions of the Contract till the completion of the contract, the price so adjusted shall be termed as executed/final Contract Price.

(xi) Contractor means an individual or legal entity whose Bid to perform the Contract has been accepted by Employer and is named as such in the Contract Agreement, and includes the legal successors or permitted assigns of the Contractor.

(xii) Contractor's Representative means any person nominated by the Contractor and approved by Employer in the manner provided in GCC 3.3**Error! Reference source not found.** hereof to perform the duties assigned by the Contractor.

(xiii) Contractor's Equipment means all plant, facilities, equipment, machinery, tools, apparatus, appliances or things of every kind required for erection, completion and maintenance of works that are to be provided by the Contractor, but does not

include plant, equipment, materials or other things intended to form or forming part of the works.

(xiv) Day means calendar day of the Gregorian calendar.

(xv) Day works are varied work inputs subject to payment on a time basis for the Contractor's employees and Equipment, in addition to payments for associated Materials and Plant.

(xvi) Defect Liability Period means the period of validity of the warranties given by the Contractor commencing at completion of the Works or a part thereof, if separate completion of the Works for such part has been provided in the Contract, during which the Contractor is responsible for defects with respect to the Works (or the relevant part thereof) as provided in **Error! Reference source not found.**10.3 hereof.

(xvii) The Defects Liability Certificate is the certificate issued by the Employer upon correction of defects by the Contractor.

(xviii) Drawings include calculations and other information provided or approved by the Employer for the execution of the Contract.

(xix) Effective Date means the date of Notification of Award/ Work Order/Contract Signing and from which the time for completion shall be determined.

(xx) Foreign Bidder shall mean any Bidder having nationality of any country other than Bhutan.

(xxi) Joint Venture or "JV" means a joint venture, association or consortium of not more than four (4) legal entities that pool their resources and skills to undertake a large or complex Contract in the role as a Contractor, with all legal entities (members in the JV) being legally liable, jointly and severally, through a joint venture agreement between the members of the JV for the execution of the Contract in the event of a member's withdrawal.

(xxii) Notification of Award (NoA) means the letter or order issued by Employer conveying the acceptance of the Bid of the successful Bidder subject to such terms and conditions as may have been stated therein.

(xxiii) Local Transportation shall include loading, unloading, handling of plant, equipment and materials at the port of entry in India/airport in Bhutan; storage at the port/airport, if required, and subsequent transportation from the port of entry/airport up to the Site.

(xxiv) Month means calendar month of the Gregorian calendar.

(xxv) Materials are all supplies, including consumables, used by the Contractor for incorporation in the Works.

(xxvi) Party means the Employer or the Contractor, as the context requires, and "Parties" means both of them.

(xxvii) Project Manager means the person appointed by Employer in the manner provided in **Error! Reference source not found.** hereof and named as such in the SCC to perform the duties delegated by Employer.

(xxviii) Plant is any integral part of the Works that shall have a mechanical, electrical, chemical or biological function.

(xxix) Site is the area defined as such in the SCC.

(xxx) Subcontractor means any person named in the Contract as a subcontractor, or any person appointed by the Contractor as a subcontractor or designer, for a part of the works; and the legal successors in title to each of these persons.

(xxxi) Time for Completion means the time within which completion of the Works as a whole (or of a part of the Works where a separate Time for Completion of such part has been prescribed) is to be attained in accordance with the stipulations in the SCC and the relevant provisions of the Contract.

(xxxii) Technical Specifications means specifications of the Works incorporated in the bidding documents and forming part of the contract and includes any modification or amendment thereto or any addition thereto or any deduction therefrom, as may be made with the mutual agreement of the Employer and Contractor.

(xxxiii) Temporary Works means all temporary works of every kind (other than Contractor's Equipment) required on Site for the execution of the Works.

(xxxiv) Works shall mean the total work to be executed in accordance with the Contract or part(s) thereof, as the case may be, and shall include all extra or additional, altered or substituted works or temporary/enabling works and urgent works as required for performance of the Contract.

(xxxv) A Variation means any change to the Works, which is instructed as a variation under Clause.

1.2. Interpretation

1.2.1. In the Contract, except where the context requires otherwise:

Words indicating one gender shall include all genders;

Words indicating the singular also include the plural and words indicating the plural also include the singular;

Provisions including the word "agree," "agreed," or "agreement" require the agreement to be recorded in writing;

"Written" or "in writing" means hand-written, type-written, printed or electronically made, and resulting in a permanent record;

"may" means that the party/person referred to has the choice whether to act or not in the matter referred to; and

"shall" means that the party/person referred to has an obligation under the Contract to perform the duty referred to.

1.2.2. "Month" and "Year" and all dates shall be reckoned according to the Gregorian calendar.

1.2.3. A "law" shall be construed as a reference to such law including its amendments or reenactments from time to time.

1.2.4. A "person" shall be construed as a reference to any person, firm, Employer, corporation, society, trust, government, or agency of a government or any association or partnership (whether or not having separate legal personality) of two or more of the above and a person shall be construed as including a reference to its successors, permitted transferees and permitted assigns in accordance with their respective interests.

1.2.5. The words "hereof" or "herein" if and when used in the Contract Documents shall mean a reference to the Contract Documents of this Contract.

1.2.6. Incoterms

a) Unless inconsistent with any provision of the Contract, the meaning of any trade term, when used, and the rights and obligations of Parties thereunder shall be

governed by the rules prescribed in the current edition of Incoterms specified in the SCC and published by the International Chamber of Commerce in Paris, France.

1.2.7. Amendment

a) No amendment or other variation of the Contract shall be effective unless it is in writing, is dated, expressly refers to the Contract, and is signed by duly authorized representatives of Employer and the Contractor.

1.2.8. Non-waiver

a) Subject to 1.2.8(b) below, no relaxation, forbearance, delay or indulgence by either party in enforcing any of the terms and conditions of the Contract or the granting of time by either party to the other shall prejudice, affect or restrict the rights of that Party under the Contract, nor shall any waiver by either Party of any breach of Contract operate as waiver of any subsequent or continuing breach of Contract;

b) Any waiver of a party's rights, powers or remedies under the Contract must be in writing, dated and signed by an authorized representative of the party granting such waiver, and must specify the right and the extent to which it is being waived.

1.2.9. Severability

a) If any provision or condition of the Contract is prohibited or rendered invalid or unenforceable, such prohibition, invalidity or unenforceability shall not affect the validity or enforceability of any other provisions and conditions of the Contract.

1.2.10. Entire Agreement

a) The Contract constitutes the entire agreement between Employer and the Contractor, with respect to the subject matter of Contract, and supersedes all communications, negotiations and agreements (whether written or oral) of the Parties with respect thereto made prior to the date of Contract.

1.3. Notices

1.3.1. Notices shall be deemed to include any approvals, consents, instructions, orders, determinations and certificates to be given under the Contract.

1.3.2. Unless otherwise stated in the Contract, all notices to be given under the Contract shall be in writing, and shall be sent by personal delivery, or courier, or post, or electronic mail, writing to the address specified in the SCC.

1.3.3. Any notice sent by post or courier shall be deemed (in the absence of evidence of earlier receipt) to have been delivered ten (10) days after dispatch. In proving the fact of dispatch, it shall be sufficient to show that the envelope containing such notice was properly addressed, stamped and conveyed to the postal authorities or courier service for transmission by airmail or special courier.

1.3.4. Any notice delivered personally or electronic mail shall be deemed to have been delivered on date of its dispatch. Either Party may change its address at which notices are to be received and/or sent by giving ten (10) days' notices to other Party in writing.

1.4. Governing Law and Language

1.4.1. The Contract shall be governed by and interpreted in accordance with the laws of the Kingdom of Bhutan.

1.4.2. The Contractor shall, in all matters arising in the performance of the Contract, comply in all respects, give all notices and pay all fees required by the provisions of any statute, ordinance or other law or any regulation or by-law of any duly constituted authority of the Kingdom of Bhutan.

1.4.3. The Contractor shall indemnify and hold Employer harmless from and against any and all liabilities, damages, claims, fines, penalties and expenses of whatever nature arising or resulting from the violation of such laws by the Contractor or its personnel including its Sub-Contractors and their employees.

1.4.4. The Contract, as well as all correspondence and documents relating to the Contract exchanged by the Contractor and Employer, shall be written in English. Supporting documents and printed literature that are part of the Contract may be in another language provided they are accompanied by an accurate translation of the relevant passages in English, in which case, for purposes of interpretation of the Contract, the translation shall govern.

1.4.5. The Contractor shall bear all costs of translation to the governing language and all risks of the accuracy of such translation, for documents provided by the Contractor.

1.5. Assignment

1.5.1. The Contractor shall not, without the express prior written consent of Employer, assign to any third party the Contract or any part thereof, or any right, benefit, obligation or interest therein or there under, except that the Contractor shall be entitled to:

1.5.2. Assign either absolutely or by way of charge any monies due and payable to it or that may become due and payable to it under the Contract in favour of its bankers;

1.5.3. Assign to the insurers (in cases where the insurers have discharged the Contractor's loss or liability) of the Contractor's right to obtain relief from any other liable party.

1.6. Fraud and Corruption

1.6.1. If Employer determines that the Contractor and/or any of its personnel, or its agents, or its subcontractors, and/or their employees has engaged in corrupt, fraudulent, collusive coercive, or obstructive practices, in competing for or in executing the Contract, then Employer may, after giving fourteen (14) days' notice to the Contractor, terminate the Contract and expel him from the site, and the provisions of **Error! Reference source not found.** shall apply as if such expulsion had been made under 14.2.1.

1.6.2. For the purposes of this sub-clause,

a) "Corrupt practice" is the offering, giving, receiving or soliciting, directly or indirectly, of anything of value to influence improperly the actions of another party;

b) "Fraudulent practice" is any act or omission, including a misrepresentation, that knowingly or recklessly misleads, or attempts to mislead, a party to obtain a financial or other benefit or to avoid an obligation;

c) "Collusive practice" is an arrangement between two or more parties designed to achieve an improper purpose, including to influence improperly the actions of another party;

d) "Coercive practice" is impairing or harming, or threatening to impair or harm, directly or indirectly, any party or the property of the party to influence improperly the actions of a party;

e) "Obstructive practice" is

a. Deliberately destroying, falsifying, altering or concealing of evidence material during an investigation or making false statements to investigators in order to materially impede any investigation into allegations of a corrupt, fraudulent, coercive or collusive practice; and/or threatening, harassing or intimidating any party to prevent it from disclosing its knowledge of matters relevant to the investigation or from pursuing the investigation, or

b. Acts intended materially to impede the exercise of the inspection rights of Employer or any organization or person appointed by Employer.

1.7. Joint Venture

1.7.1. If the Contractor is a joint venture, all such parties shall be jointly and severally bound to Employer for the fulfilment of the obligations under the Contract and shall designate one of such firms/parties to act as a leader with authority to bind the joint venture. The composition or the constitution of the joint venture shall not be altered without the prior consent of Employer.

2. The Employer

2.1. Access to Site

2.1.1. Employer shall give access to and possession of all parts of the Site including special and/or temporary rights-of-way to the Contractor, free from all encumbrances. Employer reserves the right to hand over the Site in parts progressively to the Contractor. The Contractor shall be required to take possession of the Site without any undue delay and commence the Works on the released fronts in parts without any reservation whatsoever.

2.1.2. The Contractor shall allow the Project Manager and any person authorized by the Employer access to the Site and to any place where work in connection with the Contract is being carried out or is intended to be carried out.

2.2. Employer Representative

2.2.1. Project Manager

a) If the Project Manager is not named in the Contract, then within fourteen (14) days of the Effective Date, Employer shall appoint and notify the Contractor in writing of the name of the Project Manager. Employer may from time to time appoint some other person as the Project Manager in place of the person previously so appointed, and shall give a notice of the name of such other person to the Contractor without delay. Employer shall take reasonable care to see that no such appointment is made at such a time or in such a manner as to impede the progress of Works. The Project Manager shall represent and act for Employer at all times during the currency of the Contract and carry out duties and responsibilities specified in the Contract. All notices, instructions, orders, certificates, approvals and all other communications under the Contract shall be given by the Project Manager, except as herein otherwise provided.

b) The Project Manager's representative shall be appointed by and be responsible to the Project Manager and shall carry out such duties and exercise such authority as may be delegated to him by the Project Manager under b) Project Manager's representative shall have no authority to relieve the Contractor of any of his duties or obligations under the Contract except as expressly provided hereunder or elsewhere in the Contract, nor to order any work involving delay or any extra payment by Employer, nor to make any variation in the Works.

c) The Project Manager may, from time-to-time delegate to the Project Manager's representative any of the powers and authorities vested in the Project Manager and he may at any time revoke such delegation. Any communication issued by the Project Manager's representative to the Contractor in accordance with such delegation shall have the same effect as though it had been issued by the Project Manager, provided that:

d) Any failure on the part of the Project Manager's representative to disapprove any work or materials shall not prejudice the authority of the Project Manager thereafter to disapprove such work or materials and to give instructions for the removal or for the rectification thereof;

e) If the Contractor questions any communication of the Project Manager's representative, he may refer the matter to the Project Manager who shall confirm, reverse or vary the contents of such communication.

f) The Project Manager or his representative may appoint any number of persons to assist the Project Manager's representative in carrying out his duties. Such assistants shall have no authority to issue any instructions to the Contractor save in so far as such instructions may be necessary to enable them to carry out their duties and to secure their acceptance of materials, plant, equipment and machinery or workmanship as being in accordance with the Contract, and any instructions given by any of them for those purposes shall be deemed to have been given by the Project Manager's representative.

2.3. Employer's Responsibilities

2.3.1. Employer shall ensure the accuracy of all information and/or data to be supplied by Employer, except when otherwise expressly stated in the Contract.

2.3.2. Employer shall be responsible for acquiring and providing legal and physical possession of the site and access thereto, and for providing possession of and access to all other areas reasonably required for the proper execution of the Contract, including all requisite rights of way.

2.3.3. If requested by the Contractor, Employer shall try its best to assist the Contractor in obtaining in a timely and expeditious manner all permits, approvals and/or licenses necessary for the execution of the Contract from all government authorities or public service undertakings that such authorities or undertakings require the Contractor or subcontractors or the personnel of the Contractor or subcontractors, as the case may be.

2.3.4. If so specified in the SCC, the Employer shall provide qualified personnel; shall supply and make available all raw materials, utilities, lubricants, chemicals, catalysts, other materials and facilities and shall perform work and services of whatsoever nature to enable the Contractor to complete the Works at or before the time specified in the program furnished by the Contractor under 3.143.14 hereof and in the manner thereupon specified or as otherwise agreed upon by Employer and the Contractor.

3. The Contractor

3.1. Responsibility of the Contractor

3.1.1. The Contractor shall design, execute and complete the works in accordance with the Contract and with the Project Manager's instructions, and shall remedy any defects in the works.

3.1.2. The Contractor shall provide all documents specified in the Contract, and all Contractor's personnel, goods, consumables and other things and services, whether of a temporary or permanent nature, required in and for the design, execution, and completion of Works and remedying of defects.

3.1.3. The Contractor shall be responsible for the adequacy, stability, and safety of all site operations and of all methods of construction. The Contractor (i) shall be responsible for all Contractor's documents, temporary works and such design of each item of Works, equipment or materials as is required for the item to be in accordance with the contract and (ii) shall not otherwise be responsible for the design or specification of the permanent works.

3.1.4. The Contractor shall, whenever required by the Project Manager, submit details of the arrangements and methods which the Contractor purposes to adopt for the execution of the works. No significant alteration to these arrangements and methods shall be made without this having previously being notified to the Project Manager.

Khorlochhu Hydro Power Ltd.

3.1.5. If the Contract specifies that the Contractor shall design any part of the permanent works, then unless otherwise stated:

a) The Contractor shall submit to the Project Manager the Contractor's documents for this part in accordance with the procedures specified in the Contract;

b) The Contractor's documents, in this regard, shall be in accordance with the specification and drawings, shall be written in the language for communications defined in **Error! Reference source not found.**1.4, and shall include additional information required by the Project Manager to add to the drawings for co-ordination of each party's designs;

c) The Contractor shall be responsible for this part and it shall, when the works are completed, be fit for such purposes for which the part is intended as are specified in the Contract; and

d) Prior to the commencement of the tests on completion, the Contractor shall submit to the Project Manager the "as- built" documents and operation and maintenance manuals in accordance with the specification and in sufficient detail for the Project Manager to operate, maintain, dismantle, reassemble, adjust and repair this part of the Works. Such part shall not be considered to be completed for the purpose of taking-over under **Error! Reference source not found.**9.2 until these documents and manuals have been submitted to the Project Manager.

3.1.6. Within 14 days of possession of site, the Contractor shall erect an information board as specified in SCC and construct a permanent board towards the completion of Project.

3.2. Performance Security

3.2.1. The Contractor shall, within thirty (30) days of the Notification of Award, provide a performance security equivalent to ten percent (10%) of the Contract Price valid until as specified in SCC. However, in case of delay in completion of the Contract, the validity of the contract performance security shall be extended by the Contractor for such period of delay. Employer shall encash the performance security to avoid it becoming invalid in case of failure by Contractor to extend the validity before 7 days of expiry.

3.2.2. For Contracts not deducting retention money if specified in SCC, the Contractor shall extend the validity of the performance security until 30 days beyond defect liability period (DLP) before the release of final bill payment. In case of failure to extend, Employer shall withhold from final payment equivalent to 10% of the executed Contract price or the total final payment, in lieu of retention money. If the executed Contract price exceeds the Contract price, then retention money equivalent to 10% of the exceeded amount in addition to the performance security already submitted shall be deducted from the running bills and retained until 30 days beyond DLP.

3.2.3. The performance security shall be denominated in the currency or currencies of the Contract or in a freely convertible currency acceptable to Employer and shall be in the form specified in SCC, issued/enforceable by any financial institution.

3.2.4. The performance security shall be discharged and returned to the Contractor with in thirty (30) days after the issuance of Work completion certificate/no defects liability certificate, whichever is applicable.

3.2.5. The proceeds from the Performance Security shall be payable to Employer as compensation for any loss resulting from the Contractor's failure to complete its obligations under the Contract.

3.3. Contractor's Representative and Construction Manager

3.3.1. If the Contractor's Representative is not named in the Contract, then within fourteen (14) days of the Effective Date, the Contractor shall appoint his representative and shall request

Khorlochhu Hydro Power Ltd.

Employer in writing to approve the person so appointed. If Employer makes no objection to the appointment within fourteen (14) days, the Contractor's Representative shall be deemed to have been approved. If Employer objects to the appointment within fourteen (14) days giving the reason thereof, then the Contractor shall appoint a replacement within fourteen (14) days of such objection, and the foregoing provisions of this clause 3.3.1 shall apply thereto.

3.3.2. The Contractor's Representative shall represent and act for the Contractor at all times during the currency of the Contract and shall give to the Project Manager all the Contractor's notices, instructions, information and all other communications under the Contract.

3.3.3. All notices, instructions, information and all other communications given by Employer or the Project Manager to the Contractor under the Contract shall be given to the Contractor's Representative or, in its absence, its deputy, except as herein otherwise provided.

3.3.4. The Contractor shall not revoke the appointment of the Contractor's Representative without Employer's prior written consent, which shall not be unreasonably withheld. If Employer consents thereto, an equivalently qualified, experienced and competent replacement shall be appointed in pursuant to the procedure set out in 3.3.1 3.3.1.

3.3.5. The Contractor's Representative may, subject to the approval of Employer (which shall not be unreasonably withheld), at any time delegate to any person any of the powers, functions and authorities vested in him or her. Any such delegation may also be revoked at any time subject to the approval of Employer. Any such delegation or revocation shall be subject to a prior notice signed by the Contractor's Representative, and shall specify the powers, functions and authorities thereby delegated or revoked. No such delegation or revocation shall take effect unless and until a copy thereof has been delivered to Employer and the Project Manager.

3.3.6. Any act or exercise by any person of powers, functions and authorities so delegated to him or her in accordance with this clause 3.3.53.3.5 shall be deemed to be an act or exercise by the Contractor's Representative.

3.3.7. From the commencement of Works at the Site until operational acceptance, the Contractor's Representative shall appoint a suitable person as the construction manager (hereinafter referred to as "the Construction Manager"). The Construction Manager shall supervise all work done at the Site by the Contractor and shall be present at the Site throughout normal working hours except when on leave, sick or absent for reasons connected with the proper performance of the Contract. Whenever the Construction Manager is absent from the Site, an equivalently qualified, experienced and competent person shall be appointed to act as his or her deputy.

3.3.8. Employer may by notice to the Contractor object to any representative or person employed by the Contractor in the execution of the Contract who, in the reasonable opinion of Employer, may behave inappropriately, may be incompetent or negligent, or may commit a serious breach of the Site regulations provided under **Error! Reference source not found.**3.8. Employer shall provide evidence of the same, whereupon the Contractor shall remove such person from the Site.

3.3.9. If any representative or person employed by the Contractor is removed in accordance with 3.3.83.3.8, the Contractor shall, where required, promptly appoint a replacement.

3.3.10. If any dispute of any kind whatsoever arises between Employer and the Contractor in connection with or arising out of the Contract, including without prejudice to the generality of the foregoing, any question regarding its existence, validity or termination, or the execution of the works – whether during the progress of the works or after their

completion and whether before or after the termination, abandonment or breach of the Contract – the parties shall seek to resolve any such dispute or difference by mutual consultation.

3.4. Opportunities for other Contractors

3.4.1. The Contractor shall, upon written request from Employer or the Project Manager, provide a reasonable opportunity to other Contractors employed by Employer to carry out the work at or near the Site. If the Contractor so requires, Employer shall facilitate the Contractor to make use of the facilities created by other Contractors in and around the site, for the purpose of execution of the Contract. In the process of and as a result of using such facilities, if any damage is caused to the Works, the Contractor shall be responsible to make good such damage at his own cost.

3.4.2. If the Contractor, upon written request from Employer or the Project Manager, makes available to other Contractors any roads or access ways, (the maintenance for which the Contractor is responsible), permits the use by such other Contractors of the Contractor's Equipment, or provides any other service of whatsoever nature to such other Contractors, Employer shall fully compensate the Contractor for any loss or damage caused or occasioned by such other Contractors in respect of any such use or service, and shall pay to the Contractor a reasonable remuneration for the use of such equipment or the provision of such services.

3.4.3. The Contractor shall also arrange to perform its work so as to minimize, to the extent possible, interference with the work of other Contractors. The Project Manager shall determine the resolution of any difference or conflict that may arise between the Contractor and other Contractors and the workers of Employer with regard to their work.

3.4.4. The Contractor shall notify the Project Manager promptly of any defects in the other Contractors' work that come to its notice, and that could affect the Contractor's work. The Project Manager shall determine the corrective measures, if any, required to rectify the situation after inspection of the Works. Decisions made by the Project Manager shall be binding on the Contractor.

3.5. Emergency Work

3.5.1. If, for reason of an emergency arising during the execution of the Contract, any protective or remedial work is necessary as a matter of urgency to prevent damage to the Works, the Contractor shall immediately carry out such work.

3.5.2. If the Contractor is unable or unwilling to do such work immediately, Employer may do or cause such work to be done, as it may determine it necessary in order to prevent damage to the Works. In such event Employer shall, as soon as practicable after the occurrence of any such emergency, notify the Contractor in writing of such emergency, the work done and the reasons thereof. If the work done or caused to be done by Employer is work that the Contractor was liable to do at its own expense under the Contract, the reasonable costs incurred by Employer in connection therewith shall be paid by the Contractor to Employer.

3.6. Progress Review Meetings

3.6.1. The Contractor shall attend all periodic progress review meetings organized by the Project Manager or his authorized representative. The deliberations in the meetings shall inter-alia include the scheduled program, progress of work achieved (including details of manpower, tools and plants deployed by the Contractor vis-a-vis agreed work schedule), inputs to be provided by Employer, delays, if any and recovery programme, specific hindrances to the Works and work instructions by the Project Manager. The minutes of such meetings shall be prepared by the Project Manager. These minutes shall be jointly signed by the Project

Manager or his authorized representative and the Contractor and one copy of the signed minutes shall be handed over to the Contractor.

3.7. Protection of the Environment

3.7.1. The Contractor shall take all reasonable steps to protect the environment on and off the Site and to avoid damage or nuisance to persons or to property of the public or others resulting from pollution, noise or other causes arising as a consequence of his methods of operation, and shall preserve and protect all existing vegetation and trees on or adjacent to the Site which do not unreasonably interfere with the execution of the Works. The Contractor shall be held responsible for all unauthorized cutting of and damage to trees, by careless operation of his plant, equipment or materials and stockpiling of materials etc. and Employer shall have no responsibility on this account.

3.8. Site Regulations and Safety

3.8.1. Employer and the Contractor shall establish Site regulations setting out the rules to be observed in the execution of the Contract at the Site and shall comply therewith. The Contractor shall draft site regulations and submit a copy to the Project Manager, Employer for his approval, which approval shall not be unreasonably withheld. Notwithstanding the approval of the Project Manager, the Contractor shall be responsible for the adequacy, stability and safety of all Site operations and methods of execution of the Contract.

3.8.2. Such Site regulations shall include, but shall not be limited to, rules in respect of security, safety of the Works, gate control, sanitation, medical care, and fire prevention.

3.9. Site Clearance

3.9.1. Site Clearance in course of performance: In the course of carrying out the Contract, the Contractor shall keep the Site reasonably free from all unnecessary obstruction, store or remove any surplus materials, clear away any wreckage, rubbish or temporary works from the Site, and remove any Contractor's Equipment no longer required for execution of the Contract.

3.9.2. Clearance of Site after completion: After completion of all parts of the Works, the Contractor shall clear away and remove all wreckage, rubbish and debris of any kind from the Site, and shall leave the Site and Works clean and safe to the satisfaction of the Project Manager, without which the final bill shall be withheld.

3.10. Watching and Lighting

3.10.1. The Contractor shall provide and maintain at its own expense all lighting, fencing, and watching when and where necessary for the proper execution and the protection of the Works, or for the safety of the owners and occupiers of adjacent property and for the safety of the public.

3.11. Explosives

3.11.1. Permission for the use of explosives shall be obtained from the Project Manager or from any appropriate authority as directed by the Project Manager and all explosive materials shall be used only under close supervision. It shall be the responsibility of the Contractor to seek and obtain any necessary permits, and to ensure that the requirements of the authorities are complied with, in all respects. Failure to do so may result in the Project Manager withdrawing permission to use explosives. The indemnification provided for shall include indemnification against all claims in respect of any incident arising from the use of explosives.

3.12. Temporary Utilities

3.12.1. The Contractor, except as stated in SCC, be responsible for the provision of all temporary utilities, including electricity, gas, telecommunication, drinking water, construction water and any other services the Contractor may require for the execution of the Works.

3.13. Working hours

3.13.1. Unless otherwise provided in the Contract, no work shall be carried out during the night and on public holidays of the Kingdom of Bhutan without prior written consent of Employer, except where work is necessary to ensure the safety of the Works, for the protection of life, or to prevent loss or damage to property. Where work is needed to be carried out during public holidays, the Contractor shall immediately advise the Project Manager and seek his advice and consent. However, the provisions of this clause shall not apply to any work, which is customarily carried out in multiple shifts. Notwithstanding the above provisions, female labour shall not be employed in night shifts.

3.13.2. Notwithstanding 3.13.1 or 5.15.2, if and when the Contractor considers it necessary to carry out work at night or on public holidays so as to meet the Time for Completion and requests the Employer's consent thereto, Employer shall not unreasonably withhold such consent.

3.14. Program of Performance

3.14.1. Within twenty-eight (28) days of the Effective Date, the Contractor shall prepare and submit in soft copies to the Project Manager for his approval a detailed program of performance of the Contract, made in the form of PERT network (prepared in the software as may be directed by Employer) and showing the sequence in which it proposes to design, execute and complete the Works as well as the date(s) by which the Contractor reasonably requires that Employer shall have fulfilled its obligations under the Contract so as to enable the Contractor to execute the Contract in accordance with the program and to achieve completion of the Works in accordance with the Contract. The Contractor shall update and revise the program as and when appropriate or when required by the Project Manager, but without modification in the Time for Completion given in the SCC and any extension granted in accordance with **Error! Reference source not found.**8.3, and shall submit all such revisions to the Project Manager for his approval.

3.15. Progress of Performance

3.15.1. If at any time the Contractor's actual progress falls behind the program referred to in 3.143.14.1, or it becomes apparent that it shall so fall behind, the Contractor shall, at the request of Employer or the Project Manager, prepare and submit to the Project Manager a revised program, taking into account the prevailing circumstances, and shall notify the Project Manager of the steps being taken to expedite progress so as to attain completion of the Works within the Time for Completion under **Error! Reference source not found.**, any extension thereof entitled under **Error! Reference source not found.**, or any extended period as may otherwise be agreed upon between Employer and the Contractor.

4. Subcontracting

4.1. The Contractor shall not Sub-Contract any part of the Contract or any part of the scope of work under the Contract, without explicit and written approval of Employer.

4.2. Where sub-Contracting is allowed and approved, the Contractor shall prepare a list of subcontractors with the approval of Employer. The Contractor may propose any addition to or deletion from any such list. The Contractor shall submit any such list or any modification thereto to Employer for its approval in sufficient time so as not to impede the progress of Works. Such approval by Employer for any of the subcontractors shall not relieve the Contractor from any of its obligations, duties or responsibilities under the Contract.

4.3. The Contractor shall be responsible fully for the acts, defaults and negligence of his sub-Contractors, their agents, servants, and workmen as if such acts, defaults, and negligence is of the Contractor. The Contractor shall be under obligation to furnish the un-priced copies of the Contracts awarded to the sub-Contractors at the request of Employer.

5. Contractor's Staff/Labour and Equipment

5.1. Key Personnel

5.1.1. The Contractor shall employ the key personnel named in the Schedule of Key Personnel, as referred to in the SCC, to carry out the functions stated in the Schedule or other personnel approved by the Project Manager. The Project Manager shall approve any proposed replacement of key personnel only if their relevant qualifications and abilities are substantially equal to or better than those of the personnel listed in the Schedule. If the Contractor fails to deploy the personnel as committed in the Biding Document, the employer shall stop the work if the quality of work is going to suffer or otherwise deduct the salaries of such personnel at a rate stipulated in the SCC per month per personnel for every month of absence of such personnel from the site. Such deductions shall continue till such time that the Contractor deploys the key personnel acceptable to the employer. If the Contractor fails to deploy such key personnel within one to four months, the deductions may be discontinued and the Contractor's failure to deploy such personnel shall be treated as a fundamental breach of Contract. This shall also apply to the commitment of employment to Bhutanese.

5.2. Labour

5.2.1. The Contractor shall provide and employ on the Site in the execution of the Works such skilled, semi-skilled and unskilled labour as is necessary for the proper and timely execution of the Contract. The Contractor is encouraged to use local labour that has the necessary skills.

5.2.2. Unless otherwise provided in the Contract, the Contractor shall be responsible for the recruitment, transportation, accommodation, medical care and catering of all labour, local or expatriate, required for the execution of the Contract and for all payments in connection therewith.

5.2.3. The Contractor shall be responsible, at his own cost, for obtaining all necessary permit(s) and/or visa(s) from the appropriate authorities for the entry of all labour and personnel to be employed on the Site into the Kingdom of Bhutan. The Contractor shall submit to Employer for its approval details and bio-data of all expatriate personnel, which he proposes to engage for the performance of Works under the Contract, at least sixty (60) days prior to their departure for Bhutan. Such data for each personnel shall contain, among other details, his name, present address, his assignment and responsibility in connection with the Works, and a short resume of his qualifications, experience etc. in relation to the works to be performed by him.

5.2.4. Any expatriate personnel deployed for the Works at Site, if found unsuitable or unacceptable later on to RGoB/ Employer, shall within a reasonable time, be repatriated by the Contractor, who shall make alternative arrangements for providing a suitable replacement.

5.2.5. The Contractor shall at its own expense provide the means of repatriation to all of its and its subcontractor's personnel employed on the Contract at the Site to their various home countries. It shall also provide suitable temporary maintenance of all such persons from the cession of their employment on the Contract to the date programmed for their departure. In the event that the Contractor defaults in providing such means of transportation and temporary maintenance, Employer may provide the same to such personnel and recover the cost of doing so from the Contractor.

5.2.6. No person brought to Bhutan for the completion of Works shall be repatriated without the consent of the Project Manager on a written request from the Contractor for such repatriation giving reasons thereof. The Project Manager may give permission for such repatriation provided it is satisfied that the progress of Works shall not suffer due to such repatriation/replacement.

5.2.7. The Contractor shall at all times during the progress of the Contract use its best endeavors to prevent any unlawful, riotous or disorderly conduct or behavior by or amongst its employees and the labour of its subcontractors for the preservation of peace and protection of persons and property at the Site and its surroundings.

5.2.8. In dealing with the labourers and workers engaged at the Works by him or his sub-Contractors, the Contractor shall pay due regards to all recognized festivals, holidays, and traditions and cultures of the labourers. The Contractor shall also comply with all local laws and regulations pertaining to labour and expatriate personnel issued by Ministry of Home and Cultural Affairs, RGOB. The Contractor shall indemnify Employer in respect of all claims that may be made against Employer for non-compliance thereof by the Contractor. In case of non-compliance by the Contractor, the Project Manager may take such actions as may be necessary for compliance of the various labour laws and recover the costs thereof from the Contractor.

5.2.9. The Contractor shall, deliver to the Project Manager or to the Project Manager's representative, a report in such form and at such intervals as the Project Manager may prescribe, regarding the number and names of supervisory staff and different categories of labour engaged by the Contractor.

5.3. Contractor's Equipment

5.3.1. All the equipment brought by the Contractor onto the Site shall be deemed to be intended to be used exclusively for the execution of the Contract. The Contractor shall not remove the same from the Site without the Project Manager's consent stating that the equipment is no longer required for the execution of the Contract.

5.3.2. The Contractor shall deploy construction equipment as per agreed schedule. Provided further that in case of slow rate of progress of Works, the Contractor should supplement the agreed schedule of Contractor's Equipment with additional construction equipment so as to ensure completion of Works within Time for Completion at no extra cost to Employer.

5.3.3. If the Contractor does not make available at site the equipment committed for the Contract, the hiring charges of such equipment shall be deducted at a rate stipulated in the SCC per month for every month of absence for a period up to four months after which the deductions shall be discontinued and the Contractor's failure to produce such equipment at site shall be treated as a fundamental breach of Contract.

5.3.4. Unless otherwise specified in the Contract, upon completion of the Works, the Contractor shall remove from the Site all Contractor's Equipment brought by the Contractor onto the Site and any surplus materials remaining thereon.

5.3.5. Employer may, if requested, use its best endeavours to assist the Contractor in obtaining any government permission required by the Contractor for the export of the Contractor's Equipment imported by the Contractor for use in the execution of the Contract that is no longer required for the execution of the Contract.

6. Plant, Material and Workmanship

6.1. Methodology of Construction & Equipment mobilization

6.1.1. Methodology of construction and the work plan adopted by Contractor shall match the construction methodology/requirements specified in the Technical Specifications. The

suggested minimum plant & equipment and machinery to be deployed by the Contractor for the execution of Works shall be as given in Technical Specifications. The Contractor shall arrange at his own expense all tools, plant and equipment required for execution of the Works.

6.2. Test and Inspection

6.2.1. The Contractor shall at its own expense carry out at the place of manufacture and/or on the Site all such tests and/or inspections of the plant, materials and any part of the Works as specified in the Contract.

6.2.2. Employer and the Project Manager or their designated representatives shall be entitled to attend the aforesaid test and/or inspection, provided that Employer shall bear all costs and expenses incurred in connection with such attendance including, but not limited to, all travelling and boarding & lodging expenses.

6.2.3. Whenever the Contractor is ready to carry out any such test and/or inspection, the Contractor shall give a reasonable advance notice of such test and/or inspection and of the place and time thereof to the Project Manager. The Contractor shall obtain from any relevant third party or manufacturer any necessary permission or consent to enable Employer and the Project Manager (or their designated representatives) to attend the test and/or inspection.

6.2.4. The Contractor shall provide the Project Manager with a certified report of the results of any such test and/or inspection.

6.2.5. If Employer or Project Manager (or their designated representatives) fails to attend the test and/or inspection, or if it is agreed between the Parties that such persons shall not do so, then the Contractor may proceed with the test and/or inspection in the absence of such persons, and may provide the Project Manager with a certified report of the results thereof.

6.2.6. The Project Manager may require the Contractor to carry out any test and/or inspection not required by the Contract, provided that the Contractor's reasonable costs and expenses incurred in the carrying out of such test and/or inspection shall be added to the Contract Price. Further, if such test and/or inspection impede the progress of Works and/or the Contractor's performance of its core obligations under the Contract, due allowance shall be made in respect of the Time for Completion and the other obligations so affected.

6.2.7. If any part of the Works fails to pass any test and/or inspection, the Contractor shall either rectify or replace such part of the Works and shall repeat the test and/or inspection upon giving a notice in accordance with clause 6.2.36.2.3.

6.2.8. If any dispute or difference of opinion shall arise between the Parties in connection with or arising out of the test and/or inspection of any part of the Works that cannot be settled between the Parties within a reasonable period of time, it may be referred to the Adjudicator for determination in accordance with 3.2.

6.2.9. The Contractor agrees that neither the execution of a test and/or inspection of plant, equipment or any part of the Works, nor the attendance by Employer or the Project Manager, nor the issue of any test certificate pursuant to 6.2.4, shall release the Contractor from any other responsibilities under the Contract.

6.2.10. No part of the Works or foundations shall be covered up on the Site without the Contractor carrying out any test and/or inspection required under the Contract. The Contractor shall give a reasonable notice to the Project Manager whenever any such part of the Works or foundations is ready or about to be ready for test and/or inspection; such test and/or inspection and notice thereof shall be subject to the requirements of the

Contract. The Project Manager shall then without unreasonable delay carry out the test/inspection or measurement.

6.2.11. The Contractor shall uncover any part of the Works, or shall make openings in or through the same as the Project Manager may from time to time require at the Site, and shall reinstate and make good such part or parts.

6.2.12. If any part of the Works have been covered up at the Site after compliance with the requirement of 6.2.106.2.10 and are found to be executed in accordance with the Contract, the expenses of uncovering, making openings in or through, reinstating, and making good the same shall be borne by Employer, and the Time for Completion shall be reasonably adjusted to the extent that the Contractor has thereby been delayed or impeded in the performance of any of its obligations under the Contract.

7. Work Execution

7.1. Benchmark

7.1.1. The Contractor shall be responsible for the true and proper setting-out of the Works in relation to bench marks, reference marks and lines provided to it in writing by or on behalf of Employer.

7.1.2. If, at any time during the progress of Works, any error shall appear in the position, level or alignment of the Works, the Contractor shall forthwith notify the Project Manager of such error and, at its own expense, immediately rectify such error to the reasonable satisfaction of the Project Manager. If such error is based on incorrect data provided in writing by or on behalf of Employer, the expense of rectifying the same shall be borne by Employer. The checking of any benchmark by the Project Manager shall not relieve the Contractor of his responsibility.

7.2. Contractor's Supervision

7.2.1. The Contractor shall give or provide all necessary superintendence during the execution of Works, and the Construction Manager or its deputy shall be on the Site to provide full-time superintendence of the execution as long as the Project Manager may consider necessary for the proper fulfilment of the Contractual obligations. The Contractor shall provide and employ only technical personnel who are skilled and experienced in their respective callings and supervisory staff who are competent to adequately supervise the work at hand.

7.3. Quality Assurance Program

7.3.1. Sampling, testing and quality assurance requirements shall be as per the details given in Technical Specifications. All costs associated with testing of materials required as per Technical Specifications shall be deemed to be included in the rates/prices in the Bill of Quantities.

7.4. Progress Report

7.4.1. The Contractor shall monitor progress of all the activities specified in the program referred to in 3.143.14.1 above, and supply a progress report to the Project Manager every month.

7.4.2. The progress report shall be in a form acceptable to the Project Manager and shall include, among other details: (a) percentage completion achieved vis-à-vis planned activities; and (b) where any activity is behind schedule providing reasons and likely consequences and stating the corrective action being taken. The progress report shall be supported by photographs and other written material as the Project Manager may direct.

7.5. Materials obtained from excavation

7.5.1. Materials of any kind obtained from excavation on the Site shall remain the property of Employer and shall be disposed of as the Project Manager may direct.

7.5.2. All fossils, coins, articles of value or antiquity, structures and other remains or things of geological or archaeological interest discovered on the Site shall be the absolute property of Employer and the Contractor shall take reasonable precautions to prevent his workmen or any other person from removing or damaging any such article or thing. Upon discovery and before removal of such items or structures, the Contractor shall immediately inform the Project Manager and shall dispose the same as per the direction of the Project Manager and at the cost of Employer.

8. Commencement, Delays and Suspension

8.1. Time for commencement and completion

8.1.1. The Works must be taken up and completed in all respects within the specified time of completion as mentioned in the SCC and the NoA.

8.1.2. Before the actual commencement of works, the Contractor shall submit an execution schedule of work clearly showing the materials, men and equipment to be mobilized by him to execute the works. The schedule should contain the planned monthly progress of the works for the approval of the Project Manager who shall have the authority to make additions, alternations and substitutions to such schedule in consultation with the Contractor.

8.2. Manner of Execution

8.2.1. The Contractor shall carry out all aspects of the Works in the manner (if any) specified in the Contract:

a) In a proper workmanlike and careful manner with a high sense of aesthetics and in accordance with recognized good practice; and

b) With properly equipped facilities and using non-hazardous materials, except as otherwise specified in the Contract.

8.2.2. Within thirty (30) days of the Effective Date, the Contractor shall prepare and submit in soft copies to the Project Manager for his approval a detailed construction schedule showing the sequence and interdependence of activities and work breakdown structure covering all the activities to meet milestone schedules for complete performance of work, starting from the commencement date to completion within the Time for Completion.

8.2.3. The detailed construction schedule shall include time scaled network diagrams and Gantt charts, based on calendar days. It shall be constructed to show the order in which the Contractor proposes to carry out the work and availability/requirement and use of manpower, materials and construction equipment. The Contractor shall utilize the detailed construction schedule in planning, scheduling, monitoring, coordinating and performing the Works under the Contract (including activities of subcontractors, plant vendors, material suppliers, etc.). The program so submitted by the Contractor shall be in accordance with the Contract.

8.2.4. The Project Manager and Contractor shall meet within seven (7) days of submittal of the detailed construction schedule to review and make any necessary adjustments or revisions. The Contractor shall submit the revised schedule within seven (7) days of re-submission. The process of finalizing the detailed construction schedule shall be completed within sixty (60) days from the date of issue of Notification of Award. The detailed construction schedule, once approved by Employer, shall become the baseline record schedule. The baseline detailed construction schedule shall be used for all monitoring and evaluation of Contractor's performance.

8.2.5. The Contractor shall update and revise the schedule as and when appropriate or when required by the Project Manager, but without modification in the Time for Completion

and any extension granted and shall submit all such revisions to the Project Manager for his approval.

8.2.6. If at any time the Contractor's actual progress falls behind the program, or it becomes apparent that it shall so fall behind, the Contractor shall, at the request of Employer or the Project Manager, prepare and submit to the Project Manager a revised program, taking into account the prevailing circumstances, and shall notify the Project Manager of the steps being taken to expedite progress so as to attain completion of the Works within the Time for Completion, any extension thereof entitled, or any extended period as may otherwise be agreed upon between Employer and the Contractor.

8.3. Extension of Time for Completion

8.3.1. The Time(s) for Completion specified in the SCC shall be extended if the Contractor is delayed or impeded in the performance of any of its obligations under the Contract by reason of any of the following:

a) Any Change in the Works as provided in **Error! Reference source not found.**12.2;

b) Any occurrence of Force Majeure as provided in **Error! Reference source not found.**16;

c) Any suspension order given by Employer under **Error! Reference source not found.** hereof or reduction in the rate of progress pursuant to 14.5.4;

d) Any changes in laws and regulations as provided in **Error! Reference source not found.**12.7.1;

e) Any default or breach of the Contract by Employer, specifically including failure to supply agreed items or any activity, act or omission of any other Contractors employed by Employer; or

f) Any other matter specifically mentioned in the Contract.

8.3.2. Extension of time shall be for such period as shall be fair and reasonable in all the circumstances and as shall fairly reflect the delay or impediment sustained by the Contractor.

8.3.3. Except where otherwise specifically provided in the Contract, the Contractor shall submit to the Project Manager a notice of a claim for an extension of the Time for Completion, together with particulars of the event or circumstance justifying such extension as soon as reasonably practicable after the commencement of such event or circumstance. As soon as reasonably practicable after receipt of such notice and supporting particulars of the claim, Employer and the Contractor shall agree upon the period of such extension. In the event that the Contractor does not accept Employer's estimate of a fair and reasonable time extension, the Contractor shall be entitled to refer the matter to the Adjudicator, pursuant to 3.2.

8.3.4. In no case the extension in Time for Completion shall be permitted for the defaults on the part of the Contractor.

8.4. Liquidated Damages

8.4.1. The Contractor shall pay liquidated damages to the Employer at the rate per day stated in the SCC for each day that the Completion Date is later than the Intended Completion Date. The total amount of liquidated damages shall not exceed the ten percent (10%) of the executed Contract Price. The Employer may deduct liquidated damages from payments due to the Contractor. Payment of liquidated damages shall not affect the Contractor's liabilities.

9. Taking Over

9.1. Test on Completion

9.1.1. The Contractor shall carry out the tests on completion in accordance with clause **Error! Reference source not found.**6.2.

9.1.2. The Contractor shall provide to the Project Manager with a minimum of twenty-one (21) days' notice of the date after which the Contractor shall be ready to carry out each of the tests on completion. Unless otherwise agreed, tests on completion shall be carried out within fourteen (14) days after the notice period on such day or days, as the Project Manager shall instruct.

9.1.3. In considering the result of the tests on completion, Employer shall make allowances for the effect of any use of the Works by Employer on the performance or other characteristics of the Works. As soon as the Works, or a part, have passed any tests on completion, the Contractor shall submit a certified report of the results of these tests to Employer.

9.1.4. If the tests on completion are being unduly delayed by the Contractor, Employer may by notice require the Contractor to carry out the tests within twenty-one (21) days after receiving the notice. The Contractor shall carry out the tests on such day or days within that period as the Contractor may fix and of which he shall give notice to Employer.

9.1.5. If the Contractor fails to carry out the tests on completion within the period of twenty-one (21) days, the Employer's personnel may proceed with the tests at the risk and cost of the Contractor. The tests on completion shall then be deemed to have been carried out in the presence of the Contractor and the result of the tests shall be accepted as accurate.

9.1.6. If the Works, or a part, fail to pass the tests on completion, Employer may require the failed tests on completion on any related work, to be repeated under the same terms and conditions.

9.1.7. If the Works, or a part, fail to pass the tests on completion repeated under GCC.9.1 above, the Project Manager shall be entitled to:

a) order further repetition of tests on completion as provided under GCC.9.1;

b) reject the Works if the effect of the failure is to deprive Employer of substantially the whole benefits of the Works in which event Employer shall have the same remedies as are provided in GCC 10.3.3 (c);

c) issue a Taking-Over Certificate, if Employer so requests.

9.2. Taking Over of Works

9.2.1. The Works shall be taken over by Employer upon successful execution of Works by the Contractor in accordance with provisions of Contract.

9.2.2. On successful completion of Works or any part thereof and upon request of the Contractor for taking over the Works and issuance of Taking Over Certificate (TOC), Employer shall, within forty-five (45) days after the receipt of the Contractor's application, or within fifteen (15) days from the date of actual handing over of relevant Works, whichever is later, either issue the TOC or reject the application giving its reasons and specifying the work required to be done by the Contractor to enable the TOC to be issued.

9.2.3. TOC shall be issued to the Contractor specifying the date on which the Works or any part thereof were complete and ready for taking over, after ascertaining the following:

a) The Works have been satisfactorily completed by the Contractor as per the provisions of Contract.

b) The Contractor has cleared the Site of all the surplus materials, removed all scaffoldings, shuttering materials, labour huts/sheds, cleaned the dirt from Site,

Khorlochhu Hydro Power Ltd.

temporary sanitary and water supply arrangements and all electrical gadgets/ equipment/ switches, wiring, any wood work or any such item, as relevant to the Contract to the satisfaction of the Project Manager, except those required for carrying out rectification works.

c) All the defects have been rectified to the complete satisfaction of the Project Manager.

9.2.4. Issuance of such certificates shall not relieve the Contractor of any of his obligations which otherwise were to be complied with under the terms and conditions of the Contract.

9.2.5. Notwithstanding the above-mentioned provisions, the issuance of TOC shall not be held up due to a delay in completion/ rectification of works of minor nature that do not affect the performance/ use of the Works. In such a case the Contractor shall, however, be required to give an undertaking stating that in case he fails to complete/rectify the defects within a mutually agreed period, Employer shall be at liberty to carry out the work at his risk and cost, and deduct an amount as may be considered appropriate by Employer.

9.2.6. Issuance of TOC for any part of the Works is only for the purpose of facilitating the Contractor to receive the payment for part of the Works completed and for determination of liquidated damages in respect thereof and shall not relieve the Contractor of his responsibilities under the Contract towards other parts of the Works.

9.2.7. At the time of taking over the work, the Project Manager shall ensure that the Contractor constructs a permanent information board as specified in SCC.

9.3. Operating and Maintenance Manuals

9.3.1. If "as built" Drawings and/or operating and maintenance manuals are required, the Contractor shall supply them by the dates stated in the SCC.

9.3.2. If the Contractor does not supply the Drawings and/or manuals by the dates stated in the SCC, or they do not receive the Project Manager's approval, the Project Manager shall withhold the amount stated in the SCC from payments due to the Contractor.

10. Defects

10.1. Correction of Defects

10.1.1. The Project Manager shall check the Contractor's work and notify the Contractor of any Defects that are found. The Project Manager shall give notice to the Contractor of any Defects before the end of the Defects Liability Period (DLP), which begins at Completion, and is defined in the SCC. Every time notice of a Defect is given; the Contractor shall correct the notified Defect within the length of time specified by the Project Manager's notice.

10.2. Uncorrected Defects

10.2.1. If the Contractor has not corrected a Defect within the time specified in the Project Manager's notice, the Project Manager shall assess the cost of having the Defect corrected, and the Contractor shall pay this amount to the Employer. At the option of the Employer, payment of such costs may be made in whole or in part by the Employer deducting and keeping for itself appropriate amounts from the Retention Money and/or claiming against any bank guarantee provided by the Contractor.

10.2.2. Defects Liability Period shall be extended for as long as the defects remain to be corrected.

10.3. Defect Liability

10.3.1. If during the Defect Liability Period any defect is found in the design, engineering, materials and workmanship of the Works executed by the Contractor, the Contractor shall promptly, in consultation and agreement with Employer regarding appropriate remedying

Khorlochhu Hydro Power Ltd.

of the defects, and at its cost, repair, replace or otherwise make good such defect as well as any damage to the Works caused by such defect.

10.3.2. The Defect Liability Period shall be as specified in the SCC. Where any part of the Works is taken over separately, the Defects Liability Period for that part shall commence on the date it was taken over.

10.3.3. If the Contractor fails to commence the work necessary to remedy such defect or any damage to the Works caused by such defect within fifteen (15) days of the intimation of the defect, and complete the remedying of such defect within the time specified by Employer, Employer reserves the right to get such work done in a manner as mentioned hereunder:

a) carry out the work himself or by others, in a reasonable manner and at the Contractor's cost, but the Contractor shall have no responsibility for the work. The Contractor shall pay to Employer the costs reasonably incurred by Employer in remedying the defect or damage;

b) require the Project Manager to agree or determine a reasonable reduction in the Contract Price; or

c) if the defect or damage deprives Employer of substantially the whole benefit of the Works or any major parts of the Works, Employer may terminate the Contract as a whole, or in respect of such major part, which cannot be put to the intended use. Without prejudice to any other rights, under the Contract or otherwise, Employer shall then be entitled to recover all sums paid for the Works or for such part (as the case may be), plus financing costs and the cost of dismantling the same, clearing the site and returning plant and materials to the Contractor. If the Works or any part thereof cannot be used by reason of such defect and/or making good of such defect, the Defect Liability Period of the Works or such part, as the case may be, shall be extended by a period equal to the period during which the Works or such part cannot be used by Employer because of any of the aforesaid reasons. Upon correction of the defects in the Works or any part thereof by repair/replacement, such repair/replacement shall have the Defect Liability Period for a period of twelve (12) months from the time such replacement/repair of the Works or any part thereof has been completed.

10.3.4. On completion of the Defect Liability period of the whole of the Works or where Works have been taken over in parts, Employer shall issue a Defect Liability Certificate to the Contractor certifying the successful completion of defect liability period.

11. Measurement and Valuation

11.1. Except as otherwise stated in the Contract and notwithstanding local practice:

11.1.1. Measurement shall be made of the net actual quantity of each item of the Works, and

11.1.2. The method of measurement shall be in accordance with the BoQ, technical specifications or other applicable schedules.

11.2. Whenever Employer requires any parts of the Works to be measured, reasonable notice shall be given to the Contractor's representative, who shall:

11.2.1. Promptly either attend or send a qualified representative to assist the Project Manager in making the measurement, and

11.2.2. Supply any particulars requested by Project Manager.

11.3. If the Contractor fails to attend or send a representative, the measurement made by (or on behalf of) Employer shall be accepted as accurate.

11.4. Except as otherwise stated in the Contract, wherever any Works are to be measured from records, these shall be prepared by Employer. The Contractor shall, as and when

Khorlochhu Hydro Power Ltd.

requested, attend to examine and agree with the records with Employer, and shall sign the same when agreed. If the Contractor does not attend, the records shall be accepted as accurate.

11.5. If the Contractor examines and disagrees with the records, and/or does not sign them as agreed, then the Contractor shall give notice to Employer citing the reasons/basis for the records to be allegedly inaccurate. After receiving this notice, Employer shall review the records and either confirm or vary them. If the Contractor does not so give notice to Employer within fourteen (14) days after being requested to examine the records, they shall be accepted as accurate.

12. Variations and Adjustments

12.1. Contract Price Adjustment

12.1.1. The regulation and payment of Contract Price Adjustment under the Contract shall be governed by the provisions specified in the Bidding Documents. The Contract Price as awarded shall be the base Contract Price. A certain fixed percentage of the base Contract Price shall not be subject to any Contract Price Adjustment. The balance percentage to be specified shall be of identified components towards labour, material(s) and H.S. diesel oil, hereinafter called the variable component, shall be subject to Contract Price Adjustment.

12.1.2. The fixed component and the variable components shall be specified in SCC. The amount of Contract Price Adjustment payable/ recoverable for the work done during the relevant period shall be calculated as under:

CPA = ACP – BCP

Where,

CPA = Control Price Agreement

BCP = Base Contract Price

ACP = Adjusted Contract Price

ACP shall be computed as under:

$$ACP = BCP * \left[F + \frac{l * L_1}{L_0} + \frac{m * M_1}{M_0} + \frac{m * M_2}{M_0}\right]$$

F+l+m = 1

Where:

F = Fixed component expressed in percentage of the Base Contract Price which shall not be subject to any adjustment as quantified and stipulated in the SCC, generally 20%.

L = Labour component expressed in percentage of the Base Contract Price which shall be subject to Price Adjustment as quantified and stipulated in the SCC, generally up to 15% to 30%

M = Material component expressed in percentage (excluding material issued by Employer) of the Base Contract Price which shall be subject to Price Adjustment as quantified and stipulated in the SCC, generally 30% to 60%

L = Labour Index

M = Material Index

SUBSCRIPT

'0' = refers to the value of the above-mentioned labour/ material indices as on thirty (30) days prior to the Bid opening date.

'1' = refers to the value of the corresponding labour / material indices as applicable for the preceding month in which the work is executed for which the adjustment is applicable, respectively.

12.1.3. The total amount payable on the Base Contract Price on account of the Contract Price Adjustment as indicated in above shall not exceed the maximum of twenty percent (20%) of the Contract Price as awarded.

12.1.4. Contract Price Adjustment(s) shall be calculated for the value of Works executed for the billing month as per agreed work schedule. For the purpose of payment/recovery of Price Adjustments, such payment/refund shall be operative and payable in accordance with the schedule completion period (including authorized extensions, if any) or actual completion period, whichever is earlier. Provided further that the Contractor would be eligible for such price adjustment claims or shall be liable for refund on the quantum of Works scheduled or the actual quantum of Works done provided always that the work done is more than or equal to the scheduled of work as per agreed work schedule.

12.1.5. The Contractor shall not be eligible for the payment of the price adjustment claims or liable for refund of Contract Price adjustment for the period beyond the schedule date of execution of Works if the Works has been delayed beyond the scheduled date(s) for reasons attributable to the Contractor. However, for quantities of Works executed beyond the scheduled dates of execution, the Contractor would be liable for refund of Contract Price Adjustment(s) for such delayed Work based on the value of the indices as applicable to the scheduled dates of execution, provided that if the indices of the actual dates of execution are lower than the indices as on scheduled dates of execution, then lower indices shall be applicable. In cases where the execution of Works is delayed for reasons attributable to Employer, the Contractor shall be eligible for payment or refund of price adjustment on such delayed execution of Works based on the indices prevailing as on the date of execution of such Works.

12.1.6. Rates of items included in the Bill of Quantities, whose quantities have varied beyond the permissible deviation limits and rates of extra items, derived and agreed from items included in the Bill of Quantities shall also be subject to price adjustment as per this clause.

12.1.7. The Contractor shall, every month after commencement of the Works, submit to the Project Manager a written notice of the changes, if any, that have occurred in the specified indices of Materials, and Labour or that of Diesel price, etc. during the previous reporting period containing the effective date of such change, with authenticated documentary evidence of the relevant applicable published indices / diesel price, etc.

12.1.8. Monthly bills for Contract Price Adjustment shall be made by the Contractor commencing first, from the month when all the relevant/ applicable indices/ diesel prices are available and not later than fifteen (15th) day of every month thereafter. The period for processing and making payment for these bills shall also be governed by the provisions as applicable to on-account/ progressive interim payments.

12.2. Change in Works

12.2.1. Introducing a Change

Employer shall have the right to propose, and subsequently require, that the Project Manager order the Contractor from time to time during the performance of the Contract to make any change, modification, addition or deletion to, in or from the Works in the form, quantity or quality of the Works or any part thereof (hereinafter called "Change"), provided that such Change falls within the general scope of the Works and does not constitute unrelated work and that it is technically practicable, taking into account both the state of advancement of the Works and the technical compatibility of the Change envisaged with the nature of the Works as specified in the Contract. Such changes shall include but not be limited to the following:

a) Increase or decrease in the quantity of any work included in the Contract;

b) Omission, insertion, or substitution of any item of work;

c) Change in the drawings, designs, specifications, character or quality or kind of any such work;

d) Change in the levels, lines, positions and dimensions of any part of the Works;

e) Additional work of any kind necessary for the completion of the Works;

f) Change in any specified sequence, method or timing of construction of any part of the Works.

12.2.2. Employer shall make any such variations by issuing written instructions to the Contractor and shall ensure that such variations are duly noted by the Contractor and the Project Manager. A variation made shall not, in any way, vitiate or invalid the Contract, but the effect, if any, of such variations shall be valued.

12.2.3. The Contractor shall execute and be bound by each variation, unless the Contractor promptly gives notice to Employer stating (with supporting particulars and documents) that (i) the Contractor cannot readily obtain the goods and materials required for the variation, or (ii) such variation triggers a substantial change in the sequence of the progress of the on-going works. Upon receipt of such a notice, Employer shall cancel, confirm or vary the instructions.

12.2.4. The Contractor may from time to time during its performance of the Contract, propose to Employer (with a copy to the Project Manager) any Change that the Contractor considers necessary or desirable to improve the quality, efficiency or safety of the Works. Employer may at its discretion approve or reject any Change proposed by the Contractor.

12.2.5. Notwithstanding 012.2.1 and 12.2.2 12.2.1(b), change made necessary because of any default of the Contractor in the performance of its obligations under the Contract shall not be deemed to be a Change, and such change shall not result in any adjustment of the Contract Price or the Time for Completion.

12.3. Variations in Contract

12.3.1. The Contractor shall be under obligation to agree for the Changes as may be required during the execution of the Contract as per directions of the Project Manager and execute such changes at the same rates included in the Contract, provided the total effect of such changes does not exceed the limit of plus/minus twenty percent (+-20%) of the Contract Price. Such ceiling shall however be applicable only for items of work for which rates are provided in the Contract. Notwithstanding the aforesaid provision, the quantities for individual items, if specified in the Contract, can vary to any extent. No claim for revision of rates for any individual item in the Bill of Quantities shall be admissible irrespective of the extent to which the ordered quantity may get revised (+) or (-) during the actual execution of the Works. For Change beyond twenty percent (20%) of the Contract Price, the adjustment in the rates for Bill of Quantity items shall be made as per GCC.12.4. The procedure on how to proceed with and execute Changes is specified in GCC.12.4.

12.4. Adjustment of the Contract Price

12.4.1. If reduction or increase in the Contract Price due to Change is found to be more than twenty percent (20%) of the Contract Price, the Contract Price shall be adjusted as per the rates below:

Variation in value of Work	Increase in payment for minus variation	Decrease in payment for plus variation

Up to 20%	Nil	Nil
Above 20% & up to 35%	6.00%	3.00%
Above 35% & up to 60%	8.00%	4.00%
Above 60% & up to 100%	10.00%	5.00%
Above 100%		5.00%

12.4.2. While working out the value of work for the purpose of variation, the extra items for which new rates have been paid and payment towards price adjustment; and the *adjustment towards statutory variations shall not be considered.*

Illustration:

a. *In case of variation in value of work by (plus) + sixty percent (60%), the payment for (60-20) percent, i.e., forty percent (40%) of value of work shall be decreased by four percent (4%). The reduction in Contract rates shall commence as soon as the value of work executed reaches 120% of Contract Price.*

Award Value (AV)=100

Executed Value (EV)=160

Variation=+ 60%

Final Payable= EV-((60-20) %(4%*160))*

=160-((40%(4%*160)) =160-2.56=157.44*

b. *In case of variation in value of work by (minus) – fifty-five percent (55%), the payment for (45-20) percent i.e., twenty-five percent (25%) of value of work shall be increased by eight percent (8%).*

A=Award Value (AV) =2013935.35

B=Executed Value (EV) =1164731.44

C=Decrease in value of work (B-A) = 849,203.91

D=% decrease in value of work (C/A%) = -42.17%

E=% increase in payment on plus variation of -42.17% based on variation slab=8%

*F=Amount on which 8% increase in payment will be applied (42.17%- 20%) *A=446,489.47*

*G=Decrease in payment (E%*F) =35,719.16*

Final payable=B+G=12, 00,450.60

12.4.3. The Contractor within fifteen (15) days from the receipt of an order to execute any extra item shall submit rate analysis to the Project Manager supported by documentary evidence of basic rates adopted therein; having regard to the cost of materials, actual wages of labour, and other operational costs. The analysis so provided by the Contractor shall form the basis for determination of rates for such extra items. Extra items of work which are not provided in the Bill of Quantities shall be paid on the basis of Bhutan Schedule of Rates (BSR) after adjusting such rates for the place of Works and time period elapsed after the date of BSR. If rates for such extra items are not available in BSR, the rates for such items shall be determined based on the actual expenditure relating to that item including cost of materials, fabrication/machinery handling and erection at site plus twenty percent (20%) towards overheads including profits. The price of varied items determined by the Project Manager shall be final and binding on the Contractor. No payment shall be made for the items of Works ordered to be omitted.

12.4.4. If there is delay in Employer and the Contractor coming to an agreement on the rate of varied work, provisional rates at the rate of seventy-five percent (75%) of the rates as determined by Employer shall be payable till such time as the rates are finally determined. In any case, Employer shall decide the rates within a maximum period of forty-five (45) days from the date of submission for the analysis of rates by the Contractor.

12.4.5. Items of work for which rates have been derived shall be eligible for price adjustment as per the price adjustment formula with base date as per the Contract. Rates for extra items, derived as per GCC.12.4.2 above, shall be eligible for price adjustment as per the price adjustment formula with base date corresponding to the date of input costs considered for working out the rates.

12.5. Day Work

12.5.1. For work of a minor or incidental nature not covered in the Bill of Quantities, the Project Manager may instruct that a Change shall be executed on a daywork basis.

12.5.2. The Contractor shall deliver each day to the Project Manager accurate statements in duplicate which shall include the following details of the resources used in executing the previous day's work:

a) the names, occupations and time of Contractor's employees;

b) the identification, type and time of Contractor's Equipment and temporary works; and

c) the quantities and types of plant and materials used.

12.5.3. One copy of each statement shall, if correct, or when agreed, be signed by the Project Manager and returned to the Contractor. The Contractor shall then submit priced statements of these resources to the Project Manager for further approval and inclusion in the next running bill for payment.

12.6. Record of costs

12.6.1. In any case where the Contractor is instructed to proceed with a variation prior to the determination of the adjustment to the Contract Price in respect thereof, the Contractor shall keep records of the cost of undertaking the variation and of time expended thereon. Such records shall be open to inspection by the Project Manager at all reasonable times.

12.7. Change in Laws and Regulations

12.7.1. If, after the date seven (7) days prior to the last date of Bid submission, any law, regulation, ordinance, order or by-law having the force of law is enacted, promulgated, abrogated or changed in the Kingdom of Bhutan (which shall be deemed to include any change in interpretation or application by the competent authorities) that subsequently affects the costs and expenses of the Contractor and/or the Time for Completion, the Contract Price shall be correspondingly increased or decreased, and/or the Time for Completion shall be reasonably adjusted to the extent that the Contractor has thereby been affected in the performance of any of its obligations under the Contract. However, these adjustments would be restricted to direct transactions between Employer and the Contractor. These adjustments shall not be applicable on procurement of raw materials, intermediary components etc. by the Contractor of foreign Contractor and shall also not be applicable on the bought-out items dispatched directly from sub-vendor's works to site. Notwithstanding the foregoing, such additional or reduced costs shall not be separately paid or credited if the same has already been accounted for in the price adjustment provisions where applicable, in accordance with clause GCC 12.2 hereunder.

13. Contract Price and Payment

13.1. Contract Price

13.1.1. The Contract Price shall be as specified in the Contract Agreement subject to any additions and adjustments thereto or deductions therefrom as may be made pursuant to the Contract. If specified in the SCC, the Contract Price shall be adjusted.

13.1.2. The Contract Price charged by the Contractor for the performance of the Works shall not vary from the prices quoted by the Contractor in its Bid, with the exception of any price adjustments as per the provisions of the Contract specified in the SCC.

13.1.3. Subject to 2.3.12.3.1 and **Error! Reference source not found.**16.1(h) hereof, the Contractor shall be deemed to have satisfied itself as to the correctness and sufficiency of the Contract Price, which shall, except as otherwise provided for in the Contract, cover all its obligations under the Contract.

13.2. Advance Payment

13.2.1. Mobilization Advance

a) Employer may provide for payment of interest free mobilization advance of a maximum ten (10) percent of the Contract price on request from the Contractor, if the payment of mobilization advance is stated in the SCC.

b) Together with the request for mobilization advance, the Contractor shall submit an unconditional bank guarantee for an equivalent amount of advance requested in accordance with the Contract agreement.

c) The advance shall be recovered through proportionate/percentage deductions from payments made to the Contractor. All advances shall be fully recovered by the time eighty percent (80%) of the Contract is executed.

13.2.2. Secured Advance

a) If stated in the SCC, Employer may provide for payment of secured advance to the Contractor against the construction materials brought to the work site as per the Contract agreement and verified by the Project Manager. The list of materials and the quantities not liable for secured advance if any, shall be specified in the SCC. In exceptional circumstances if specified in SCC, secured advance shall be given on account of plants & machineries.

b) The payment of the secured advance shall be based on the following conditions:

i) The materials shall be in accordance with the specifications and shall not be in excess of the requirements;

ii) A declaration shall be given by the Contractor passing on the lien on the rights of the materials to the Employer. However, the materials delivered at work site, shall be properly stored and protected against loss, damage or deterioration by the Contractor;

iii) The amount of the secured advance shall not be more than seventy-five (75%) of the cost of materials delivered at the site of works, which shall be supported by the original invoices/bills. All materials imported from other countries shall be supported by Bhutan Sales Tax receipts or customs clearance. In case of fabrication works off site, secured advance may be paid to the Contractor after site inspection is carried out by the Procuring Agency at the cost of the Contractor, submission of proof of payment and submission of work order;

iv) The advance shall be recovered through proportionate/percentage deductions from payments made to the Contractor. All advances shall be fully recovered by the time eighty percent (80%) of the Contract is executed.

13.3. Terms of Payment

13.3.1. The Contract Price shall be paid as specified in the Contract:

a) The Contractor's request for payment shall be made to Employer in writing accompanied by invoices and documents, describing, as appropriate, the work done and related services performed in fulfilment of the obligations stipulated in the Contract.

b) Payment shall be made promptly by Employer, no later than 30 (thirty) days after the receipt of bills and documents in accordance with GCC 13.3.1(a), provided that the documents are compliant with all the requirements of Employer.

c) No payment made by Employer herein shall be deemed to constitute acceptance by Employer of the works or any part(s) thereof.

d) The currency or currencies in which payments are made to the Contractor under this Contract shall be those in which the Contract Price is expressed in the Contractor's Bid. In cases where the Bid price is in Indian Rupees or Bhutanese Ngultrum, Employer shall at its discretion make payment in either of the currencies at the exchange rate of one Ngultrum = one Indian Rupees.

e) Wherever applicable, the release of first progressive interim payment shall be subject to submission of documentary evidence by the Contractor towards having taken the insurance policy (ies) and acceptance of the same by the Project Manager.

13.4. Taxes and Duties

13.4.1. The prices bid by the Contractor shall include all duties, taxes, and levies that may be levied in accordance with the laws and regulations in force as of the date 30 days prior to the closing date for submission of Bids. As such, except as otherwise specifically provided in the Contract, the Contractor shall bear and pay all taxes, duties, levies and charges assessed on the Contractor, its subcontractors or their employees by all municipal, state or national government authorities in connection with the Works in and outside of the Kingdom of Bhutan.

13.4.2. At the time of release of payment, tax shall be deducted at source (TDS) from Bhutanese Bidders and International Bidders as specified in the SCC from the gross amount of bills. Employer shall furnish necessary TDS Certificate to the Bidders, issued by the Department of Revenue & Customs, RGoB. The Contractor shall be responsible to deduct tax at source from the gross payments made to the sub-Contractors and deposit the same to the account of RGoB as per provisions of law in this regard in force from time to time.

13.4.3. If any rates of taxes or levies are increased or decreased, a new tax or levy is introduced, an existing tax is abolished, or any change in interpretation or application of any tax occurs in the course of the performance of Contract, an equitable adjustment of the Contract Price shall be made to fully take into account any such change by addition to the Contract Price or deduction therefrom, as the case may be.

13.4.4. The Contractor's staff, personnel and labour shall be liable to pay personal income tax in Bhutan in respect of such of their salaries and wages as are chargeable under the laws and regulations in force and the Contractor shall perform such duties with regard to such deductions thereof as may be imposed on him by such laws and regulations.

13.5. Retention Money

13.5.1. The Employer shall retain ten percent (10%) from each payment due to the Contractor in the proportion stated in the SCC until Completion of the whole of the Works as retention money.

13.5.2. The Retention Money may be returned to the Contractor upon issuance of No Defects Liability Certificate. After completion of the work, the Contractor may substitute the

Khorlochhu Hydro Power Ltd.

retention money with an unconditional bank guarantee, issued/enforceable by any financial institution in Bhutan. Such bank guarantee shall be valid until the completion of Defect Liability Period.

13.5.3. If the Contractor fails to remedy any reported defect within the Defects Liability Period, Employer shall withhold the payment or realize claims from the Retention Money, of an amount, which in the opinion of Employer, represent the cost of the defects to be remedied.

13.5.4. On completion of the Defects Liability Period, the Project Manager shall issue a no Defect Liability Certificate to the Contractor and release the retention money and/ or bank guarantee as available within fifteen (15) days from the issue of such certificate.

14. Termination

14.1. Termination for Employer's Convenience

14.1.1. Employer shall at any time terminate the Contract for any reason by giving the Contractor (and a copy to the Project Manager) a sixty (60) days prior notice of termination that refers to this clause GCC 14.1.

14.2. Termination for Contractor's default

14.2.1. In situations/conditions defined below, Employer shall serve a notice to the Contractor highlighting the default/limitation on the part of the Contractor and advising the Contractor to take appropriate corrective/remedial measures. If the Contractor fails to correct or to take steps to remedy the faults/limitations within fourteen (14) days of the notice served by Employer, Employer may, without prejudice to any other rights it may possess, terminate the Contract forthwith by giving a fifteen (15) days prior notice of termination with a copy to the Project Manager and its reasons thereof to the Contractor, referring to this clause GCC 14.2.1.

a) If the Contractor becomes bankrupt or insolvent, has a receiving order issued against it, compounds with its creditors, or, if the Contractor is a corporation, a resolution is passed or order is made for its winding up (other than a voluntary liquidation for the purposes of amalgamation or reconstruction), a receiver is appointed over any part of its undertaking or assets, or if the Contractor takes or suffers any other analogous action in consequence of debt;

b) If the Contractor assigns or transfers or sub-Contracts the Contract in whole or in part or any right or interest therein in violation of the provision of 1.51.5.1;

c) If the Contractor, in the judgement of Employer has engaged in fraud or corruption, as defined in 1.31.6 in competing for or in executing the Contract;

d) If the Contractor has abandoned or repudiated the Contract for more than 30 days;

e) If the Contractor has, without valid reasons, failed to commence the Works promptly or has suspended (other than pursuant to 14.5.414.5.4) the progress of Contract performance for more than twenty-eight (28) days after receiving a written instruction from Employer to proceed;

f) If the Contractor persistently fails to execute the Contract in accordance with the Contract or persistently neglects to carry out its obligations under the Contract without just cause and does not make good such failure or neglect within reasonable period even after a written notice by the Project Manager;

g) If the Contractor refuses or is unable to provide required/sufficient materials, services, equipment or manpower to execute and complete the Works in the manner specified in the program furnished under 3.143.14.1 at rates of progress that give reasonable

assurance to Employer that the Contractor can attain completion of the Works by the Time for Completion as extended;

h) If the liquidated damages to be levied in terms of the provisions under **Error! Reference source not found.**8.4.1 has reached a maximum of ten percent (10%) of the Contract Price and it appears to the Project Manager that the Contractor is unable to complete the Works.

14.2.2. Upon receipt of the notice of termination under GCC 14.1 and GCC 14.2, the Contractor shall, either immediately or upon such date as is specified in the notice of termination:

a) Cease all further work, except for such work as Employer may specify in the notice of termination for the sole purpose of protecting that part of the Works already executed, or any work required to leave the Site in a clean and safe condition;

b) Terminate all subcontracts, except those to be assigned to Employer pursuant to paragraph (d)(ii) below;

c) Remove all Contractor's Equipment from the Site, repatriate the Contractor's and its subcontractors' personnel from the Site, remove from the Site any wreckage, rubbish and debris of any kind, and leave the whole of the Site in a clean and safe condition;

d) In addition, the Contractor, subject to the payment specified in GCC.14.4, shall:

(i) Deliver to Employer the parts of the Works executed by the Contractor up to the date of termination;

(ii) To the extent legally possible, assign to Employer all right, title and benefit of the Contractor to the Works and to the plant, equipment or material as at the date of termination, and, as may be required by Employer, in any subcontracts concluded between the Contractor and its subcontractors;

(iii) Deliver to Employer all non-proprietary drawings, specifications and other documents prepared by the Contractor or its subcontractors as at the date of termination in connection with the Works.

14.2.3. Upon termination under GCC 14.2, Employer may expel the Contractor, and complete the Works itself or by employing any third party. Employer may, to the exclusion of any right of the Contractor over the same, take over and use any Contractor's equipment owned by the Contractor and at site in connection with the Works for such reasonable period, as Employer considers expedient for the completion of the work. However, in doing so, Employer shall pay a fair rental rate to the Contractor, bear all the maintenance costs and indemnify the Contractor for all liability including damage or injury to persons arising out of Employer's use of such equipment. Upon completion of the Works or at such earlier date as Employer thinks appropriate, Employer shall give notice to the Contractor that such Contractor's Equipment shall be returned to the Contractor at or near the Site and shall return such Contractor's Equipment to the Contractor in accordance with such notice. The Contractor shall thereafter without delay and at its cost remove or arrange removal of the same from the Site.

14.3. Termination by Contractor

14.3.1. The Contractor may terminate the Contract forthwith by giving a notice to Employer to that effect, referring to this clause 14.3.1, if Employer becomes bankrupt or insolvent, has a receiving order issued against it, compounds with its creditors, or, being a corporation, if a resolution is passed or order is made for its winding up (other than a voluntary liquidation for the purposes of amalgamation or reconstruction), a receiver is appointed over any part of its undertaking or assets, or if Employer takes or suffers any other analogous action in consequence of debt.

14.3.2. If the Contract is terminated under 14.3.1, then the Contractor shall immediately:

a) Cease all further work, except for such work as may be necessary for the purpose of protecting that part of the Works already executed, or any work required to leave the Site in a clean and safe condition;

b) Terminate all subcontracts, except those to be assigned to Employer pursuant to paragraph (d)(ii) below;

c) Remove all Contractor's Equipment from the Site and repatriate the Contractor's and its subcontractor's personnel from the Site;

d) In addition, the Contractor, subject to the payment specified in **Error! Reference source not found.**14.4, shall

(i) Deliver to Employer the parts of the Works executed by the Contractor up to the date of termination;

(ii) To the extent legally possible, assign to Employer all right, title and benefit of the Contractor to the Works and to the plant, equipment or materials as of the date of termination, and, as may be required by Employer, in any subcontracts concluded between the Contractor and its subcontractors;

(iii) Deliver to Employer all non-proprietary drawings, specifications and other documents prepared by the Contractor or its subcontractors as of the date of termination in connection with the Works.

14.4. Payment upon Termination

14.4.1. If the Contract is terminated because of a fundamental breach of Contract by the Contractor, the Project Manager shall issue a certificate for the value of the work done and Materials ordered less advance payments received up to the date of the issue of the certificate and less the percentage to apply to the value of work not completed, as indicated in the SCC. If the total amount due to the Employer exceeds any payment due to the Contractor, the difference shall be a debt payable by the Contractor to the Employer.

14.4.2. If the Contract is terminated for the Employer's convenience or because of a fundamental breach of Contract by the Employer, the Project Manager shall issue a certificate for the value of the work done, Materials ordered, the reasonable cost of removal of Equipment, repatriation of the Contractor's personnel employed solely on the Works, and the Contractor's costs of protecting and securing the Works, and less advance payments received up to the date of the certificate.

14.5. Suspension

14.5.1. Employer /Project Manager may, by notice to the Contractor, order the Contractor to suspend performance of any or all of its obligations under the Contract. Such notice shall specify the obligation of which performance is to be suspended, the effective date of the suspension and the reasons thereof. The Contractor shall thereupon suspend performance of such obligation (except those obligations necessary for the care or preservation of the Works) until ordered in writing to resume such performance by the Project Manager/ Employer.

14.5.2. If, by virtue of a suspension order given by the Project Manager/ Employer, the Contractor's performance of any of its obligations is suspended for an aggregate period of more than ninety (90) days, then at any time thereafter and provided that at that time such performance is still suspended, the Contractor may give a notice to the Project Manager requiring that Employer shall, within twenty-eight (28) days of receipt of the notice, order the resumption of such performance or request and subsequently order a Change in the Works in accordance with **Error! Reference source not found.**12.2, excluding the performance of the suspended obligations from the Contract.

14.5.3. If Employer fails to do so within such period, the Contractor may, by a further notice to the Project Manager, elect to treat the suspension, where it affects only a part of the Works, as a deletion of such part of the Works in accordance with **Error! Reference source not found.**12.2 or, where it affects the whole of the Works, as termination of the Contract under 14.1.

14.5.4. Under the condition (a) and (b) below, the Contractor may, by giving fourteen (14) days' notices to Employer suspend performance of all or any of its obligations under the Contract, or reduce the rate of progress:

a) If Employer has failed to pay the Contractor any sum due under the Contract within the specified period, or has failed to approve any invoice or supporting documents without just cause or commits a substantial breach of the Contract, the Contractor may give a notice to Employer that requires payment of such sum, requires approval of such invoice or supporting documents, or specifies the breach and requires Employer to remedy the same, as the case may be. If Employer fails to pay such sum, fails to approve such invoice or supporting documents or give its reasons for withholding such approval, or fails to remedy the breach or take steps to remedy the breach within fourteen (14) days after receipt of the Contractor's notice; or

b) If the Contractor is unable to carry out any of its obligations under the Contract for any reason attributable to Employer, including but not limited to Employer's failure to provide possession of or access to the Site or other areas in accordance with 2.3.2, or failure to obtain any governmental permit necessary for the execution and/or completion of the Works;

14.5.5. If the Contractor's performance of its obligations is suspended or the rate of progress is reduced pursuant to this clause **Error! Reference source not found.**, then the Time for Completion shall be extended in accordance with **Error! Reference source not found.**8.3.1, and any and all additional costs or expenses incurred by the Contractor as a result of such suspension or reduction shall be paid by Employer to the Contractor in addition to the Contract Price, except in the case of suspension order or reduction in the rate of progress by reason of the Contractor's default or breach of the Contract.

14.5.6. During the period of suspension, the Contractor shall not remove from the Site any plant, equipment, material or any part of the Works or any Contractor's Equipment, without the prior written consent of Employer.

15. Care of the Works and Indemnities

15.1. Protection of Works

15.1.1. The Contractor shall have total responsibility for protecting the Works till it is finally taken over by Employer. No claim shall be entertained by Employer for any damage or loss to the Works and the Contractor shall be responsible for the complete restoration of the damaged works/equipment to its original condition to comply with the specification and drawings.

15.1.2. The Contractor shall, in connection with the Works, provide and maintain at his own cost all lights, guards, fencing and security when and where necessary or required by Employer or by any authority for the protection of the Works or for the safety and convenience of the public or others.

15.2. Copyright

15.2.1. The copyright of all drawings, documents and other materials containing data and information furnished to Employer by the Contractor shall remain vested in the Contractor, or, if they are furnished to Employer directly or through the Contractor by

any third party, including suppliers of materials, the copyright in such materials shall remain vested in such third Party.

15.3. Confidential Information

15.3.1. Employer and the Contractor shall keep confidential and shall not, without the written consent of the other Party hereto, divulge to any third party any documents, data or other information furnished directly or indirectly by the other Party hereto in connection with the Contract, whether such information has been furnished prior to, during or following completion or termination of the Contract. Notwithstanding the above, the Contractor may furnish to its Sub-vendors such documents, data and other information as it receives from Employer to the extent required for the Sub-vendors to perform its obligations under the Contract, in which event the Contractor shall be under obligation to have a clause in the Contracts with their sub vendors regarding confidentiality similar to that provided herein.

15.3.2. Employer shall not use such documents, data and other information received from the Contractor for any purposes unrelated to the Contract. Similarly, the Contractor shall not use such documents, data and other information received from Employer for any purpose other than the design, procurement of plant and equipment, construction or such other work and services as are required for the performance of the Contract.

15.3.3. The obligation of a Party under 15.3.1 and 15.3.2 above, however, shall not apply to information that:

a) Employer or the Contractor needs to share with the RGoB;

b) Is already in public domain now, or enters the public domain during the execution of the Contract through no fault of that Party;

c) Can be proven to have been possessed by that Party at the time of disclosure and which was not previously obtained, directly or indirectly, from the other Party; or

d) Otherwise lawfully becomes available to that Party from a third party that has no obligation of confidentiality.

15.3.4. The above provisions of **Error! Reference source not found.** shall not in any way modify any undertaking of confidentiality given by either of the Parties hereto prior to the date of the Contract in respect of the performance of the Contract or any part thereof.

15.3.5. The provisions of **Error! Reference source not found.** shall survive completion or termination, for whatever reason, of the Contract.

15.4. Patent Indemnity

15.4.1. The Contractor shall, subject to Employer's compliance with 15.4.2, indemnify and hold harmless Employer and its employees from and against any and all suits, actions or administrative proceedings, claims, demands, losses, damages, costs and expenses of any nature, including attorney's fees and expenses, which Employer may suffer as a result of any infringement or alleged infringement of any patent, utility model, registered design, trademark, copyright or other intellectual property right registered or otherwise existing at the date of the Contract by reason of:

a) The execution of the Works by the Contractor or the use of the Works in the Kingdom of Bhutan; and

b) The sale in any country of the products produced by the Works.

15.4.2. Such indemnity shall not cover any use of the Works or any part thereof other than for the purpose indicated by or reasonably to be inferred from the Contract, neither any infringement resulting from the use of the Works or any part thereof, or any products

produced thereby in association or combination with any other equipment, plant or materials not supplied by the Contractor, pursuant to the Contract.

15.4.3. If any proceedings are brought or any claim is made against Employer arising out of the matters referred to in 15.4.1, Employer shall promptly give the Contractor notice thereof, and the Contractor may at its own expense and in Employer's name conduct such proceedings or claims and any negotiations for the settlement of any such proceedings or claims.

15.4.4. If the Contractor fails to notify Employer within thirty (30) days after receipt of such notice that it intends to conduct any such proceedings or claims, then Employer shall be free to conduct the same on its own behalf at the cost of the Contractor.

15.4.5. Employer shall, at the Contractor's request, provide all available assistance to the Contractor in conducting such proceedings or claim, and shall be reimbursed by the Contractor for all reasonable expenses incurred in so doing.

15.4.6. Employer shall indemnify and hold harmless the Contractor and its employees from and against any and all suits, actions or administrative proceedings, claims, demands, losses, damages, costs and expenses of any nature, including attorney's fees and expenses, which the Contractor may suffer as a result of any infringement or alleged infringement of any patent, utility model, registered design, trademark, copyright or other intellectual property right registered or otherwise existing at the date of the Contract arising out of or in connection with any design, data, drawing, specification or other documents or materials provided or designed by or on behalf of Employer.

15.5. Limitations of Liability

15.5.1. In cases of gross negligence or willful misconduct:

a) Neither Party shall be liable to the other Party, whether in Contract, tort or otherwise, for any indirect or consequential loss, damage, loss of use, loss of production, or loss of profits or interest costs. However, this exclusion shall not apply to any obligation of the Contractor to pay liquidated damages to Employer; and

b) The aggregate liability of the Contractor to Employer, whether under the Contract, in tort or otherwise, shall not exceed the total Contract Price. However, this limitation shall not apply to the cost of repairing or repairing defective works, or to any obligation of the Contractor to indemnify Employer with respect to patent infringement.

15.5.2. In all cases, the Party claiming a breach of Contract or a right to be indemnified in accordance with the Contract shall be obliged to take all reasonable measures to mitigate the loss or damage.

15.6. Indemnification Employer

15.6.1. The Contractor shall indemnify and hold harmless Employer and its employees from and against any and all suits, actions or administrative proceedings, claims, demands, losses, damages, costs, and expenses of whatsoever nature, including attorney's fees and expenses, in respect of the death or injury of any person or loss of or damage to any property (other than the Works whether accepted or not), arising in connection with the execution of Works and caused due to the negligence of the Contractor or its subcontractors, or its employees, or agents. For any injury, death or damages to property caused by the negligence of Employer, its other Contractors, employees, or agents Employer shall be responsible.

15.6.2. If any proceedings are brought or any claim is made against Employer that might subject the Contractor to liability under 15.6.1, Employer shall promptly give the Contractor a notice thereof and the Contractor shall at its own expense and in the Employer s name

conduct such proceedings or claim and any negotiations for the settlement of any such proceedings or claim.

15.6.3. If the Contractor fails to notify Employer within twenty-eight (28) days after receipt of such notice that it intends to conduct any such proceedings or claim, then Employer shall be free to conduct the same on its own behalf. Unless the Contractor has so failed to notify Employer within the twenty-eight (28) day period, Employer shall make no admission that may be prejudicial to the defense of any such proceedings or claim.

15.6.4. Employer shall, at the Contractor's request, afford all available assistance to the Contractor in conducting such proceedings or claim, and shall be reimbursed by the Contractor for all reasonable expenses incurred in so doing.

15.6.5. Employer shall indemnify and hold harmless the Contractor and its employees and subcontractors from any liability for loss of or damage to property of Employer, other than the Works not yet taken over, that is caused by fire, explosion or any other perils, in excess of the amount recoverable from insurances procured under GCC.17, provided that such fire, explosion or other perils were not caused by any act or failure of the Contractor.

15.6.6. The Party entitled to the benefit of an indemnity under this clause shall take all reasonable measures to mitigate any loss or damage, which has occurred. If the Party fails to take such measures, the other party's liabilities shall be correspondingly reduced.

16. Exceptional Event (Force Majeure)

16.1. "Force Majeure" shall mean any unavoidable event beyond the reasonable control of Employer or of the Contractor, as the case may be, and which has impeded the progress of work unreasonably and shall include, without limitation to the following:

a) War, hostilities or warlike operations whether a state of war be declared or not, invasion, act of foreign enemy and civil war;

b) Rebellion, terrorism, revolution, sabotage by persons other than the Contractor's personnel, insurrection, mutiny, usurpation of civil or military government, conspiracy, riot, civil commotion and terrorist acts;

c) Riot, commotion, disorder, strike or lockout by persons other than the Contractor's personnel;

d) Munitions of war, explosive materials, ionizing radiation or contamination by radio-activity, except as may be attributable to the Contractor's use of such munitions, explosives, radiation or radio-activity;

e) Confiscation, nationalization, mobilization, commandeering or requisition by or under the order of any government or de jure or de facto authority or ruler or any other act or failure to act of any government authority;

f) Embargo, import restriction, port congestion, industrial dispute, shipwreck, shortage or restriction of power supply, epidemics/pandemic, quarantine and plague;

g) Natural catastrophes such as earthquake, hurricane, typhoon, volcanic activity, fire, landslide or flood;

h) The physical conditions or artificial obstructions on the Site.

16.2. If a force majeure situation arises, the Bidder shall notify the Employer in writing within seven (7) days of such conditions and the cause thereof along with documentary or pictorial evidence acceptable to the Employer. Unless otherwise directed by the Employer in writing, the Bidder shall continue to perform its obligation.

16.3. The Party who has given such notice shall be excused from the performance or punctual performance of its obligations under the Contract for so long as the relevant event of

Khorlochhu Hydro Power Ltd.

Force Majeure continues and to the extent that such Party's performance is prevented, hindered or delayed. The Time for Completion shall be extended in accordance with **Error! Reference source not found.**8.3.

16.4. The Party or Parties affected by the event of Force Majeure shall use reasonable efforts to mitigate the effect thereof upon its or their performance of the Contract and to fulfil its or their obligations under the Contract so far as reasonably practicable.

16.5. Delay or non-performance by either Party hereto caused by the occurrence of any event of Force Majeure after the Contract has become effective shall not:

a) Constitute a default or breach of the Contract;

b) Give rise to any claim for damages or additional cost or expense occasioned thereby.

16.6. If the performance of the Contract is substantially prevented, hindered or delayed for a single period of more than sixty (60) days or an aggregate period of more than one hundred and twenty (120) days on account of one or more events of Force Majeure during the currency of the Contract, the Parties shall attempt to develop a mutually satisfactory solution, failing which the dispute shall be resolved in accordance with 2.

16.7. Notwithstanding 16.5, Force Majeure shall not apply to any obligation of Employer to make payments to the Contractor herein.

17. Insurance

17.1. The Contractor shall provide, in the joint names of the Employer and the Contractor, insurance cover from the date of commencement of the Works to the end of the respective periods specified below, in the amounts and deductibles stated in the SCC for the following events:

Sl.	Nature of insurance	Period of insurance coverage
i	Loss of or damage to the Works including Employer issued materials, if any	Up to the date of Taking Over of the last Works
ii	Loss of or damage to the Contractor's tools and plant	Up to the date of Taking Over of the last Works
iii	Loss of or damage to the property other than Works including those of third parties	Up to the completion of the Defects Liability Period
iv	Injury or death of personnel belonging to the Contractor, Employer or any other party	Up to the completion of the Defects Liability Period

The insurance policy for (iv) above shall be taken from Bhutanese insurance companies.

17.2. Policies and certificates for insurance shall be delivered by the Contractor to the Project Manager for the Project Manager's approval before the start date. All such insurance shall provide for compensation to be payable in the types and proportions of currencies required to rectify the loss or damage incurred. Payments received from insurers shall be used for the rectification of loss or damage.

17.3. If the Contractor does not provide any of the policies and certificates required, the Employer may affect the insurance which the Contractor should have provided and recover the premiums the Employer has paid from payments otherwise due to the Contractor or, if no payment is due, the payment of the premiums shall be a debt due from the Contractor to the Employer.

17.4. Alterations to the terms of insurance shall not be made without the approval of the Project Manager. Both parties shall comply with any conditions of the insurance policies.

Khorlochhu Hydro Power Ltd.

18. Claims

18.1. Contractor's Claims

18.1.1. If the Contractor considers himself to be entitled to any extension of the Time for Completion and/or any additional payment, under any clause of GCC.18 or otherwise in connection with the Contract, the Contractor shall give notice to Employer, describing the event or circumstances giving rise to the claim. The notice shall be given as soon as practicable, and not later than thirty (30) days after the Contractor became aware, or should have become aware, or the event or circumstance.

18.1.2. If the Contractor fails to give notice of a claim within such period of thirty (30) days, the Time for Completion shall not be extended, the Contractor shall not be entitled to additional payment, and Employer shall be discharged from all liability in connection with the claim. Otherwise, the following provisions of this sub-clause shall apply.

18.1.3. The Contractor shall also submit any other notices which are required by the Contract, and supporting particulars for the claim, as relevant to such event or Circumstances.

18.1.4. The Contractor shall keep such contemporary records as may be necessary to substantiate any claim, either on the Site or at another location acceptable to the Project Manager. Without admitting the Employer's liability, the Project Manager may, after receiving any notice under this sub-clause, monitor the record-keeping and/or instruct the Contractor to keep further contemporary records. The Contractor shall permit the Project Manager to inspect all these records, and shall (if instructed) submit copies to the Project Manager.

18.1.5. Within forty-two (42) days after the Contractor became aware (or should have become aware) of the event or circumstances giving rise to the claim, or within such other period as may be proposed by the Contractor and approved by the Project Manager, the Contractor shall send to the Project Manager a fully detailed claim which includes full supporting particulars of the basis of the claim and for the extension of time and/or additional payment claimed. If the event or circumstance giving rise to the claim has a continuing effect:

a) this fully detailed claim shall be considered as interim;

b) the Contractor shall send further interim claims at monthly intervals, giving the accumulated delay and/or amount claimed, and such further particulars as the Project Manager may reasonably require; and

c) the Contractor shall send a final claim thirty (30) days after the end of the effects resulting from the event or circumstances, or within such other period as may be proposed by the Contractor and approved by the Project Manager.

18.1.6. Within forty-two (42) days after receiving a claim or any further particulars supporting a previous claim, or within such other period as may be proposed by the Project Manager and approved by the Contractor, the Project Manager shall respond with approval, or with disapproval and detailed comments. He may also request any necessary further particulars, but shall nevertheless give his response on the principals of the claim within such time.

18.1.7. Each payment certificate shall include such amounts for any claim as have been reasonably substantiated as due under the relevant provision of the Contract. Unless and until the particulars supplied are sufficient to substantiate the whole of the claim, the Contractor shall only be entitled to payment for such part of the claims, as he has been able to substantiate.

18.1.8. The Project Manager shall proceed to determine (i) the extension (if any) of the Time for Completion (before or after its expiry), and/or (ii) the additional payment (if any) to which the Contractor is entitled under the Contract.

18.1.9. The requirements of this sub-clause are in addition to those of any other sub-clause, which may apply to a claim. If the Contractor fails to comply with this or any other sub-clause in relation to any claim, any extension of time and/or additional payment shall take account of the extent (if any) to which the failure has prevented or prejudiced proper investigation of the claim, unless the claim is excluded under the second paragraph of this sub-clause.

18.2. Claims towards idling of resources

18.2.1. Components of claim admissible hereunder towards additional cost incurred by the Contractor due to idling of resources in connection with execution of Contract for reasons given hereunder shall be evaluated by the Project Manager:

a) Employer does not give possession to Site or a part of the Site free of all encumbrances by the Site possession date stated in the SCC;

b) Employer modifies the schedule of other Contractors in a way which affects the works of the Contractor under the Contract;

c) Employer's representatives' does not issue Drawings, Technical Specifications or instructions required for the execution of Works as per agreed schedule;

d) Other Contractors or Employer does not work within the dates stated in the Contract that cause delay or extra work to the Contractor.

18.2.2. The evaluation of compensation towards idling of resources done by the Project Manager shall be final and binding on the Contractor. The procedure as provided in GCC.17.1 for settlement of claims shall also apply for such claims.

18.3. Early Warning

18.3.1. The Contractor shall warn the Project Manager in writing at the earliest of specific likely future events or circumstances that may adversely affect the quality of the work, increase the Contract Price or delay the execution of the Works. The Project Manager may require the Contractor to provide an estimate of the expected effect of the future event or circumstance on the Contract Price and Completion Date. The estimate shall be provided by the Contractor not later than 30 days after the Contractor became aware, or should have become aware, of the event or circumstance. If the Contractor fails to give notice of a claim within such period of 30 days, the Employer may be discharged from all liability in connection with the claim.

19. Disputes and Arbitrations

19.1. Amicable Settlement

19.1.1. If any dispute of any kind whatsoever arises between Employer and the Contractor in connection with or arising out of the Contract, including without prejudice to the generality of the foregoing, any question regarding its existence, validity or termination, or the execution of the works – whether during the progress of the works or after their completion and whether before or after the termination, abandonment or breach of the Contract – the parties shall seek to resolve any such dispute or difference by mutual consultation.

19.2. Dispute Resolution

19.2.1. In case of dispute, the objecting party may file a written Notice of dispute to the other Party providing in detail the basis of the dispute. The Party receiving the Notice of Dispute shall consider it and respond in writing within 14 days after receipt. If that Party fails to respond within 14 days, or the dispute cannot be amicably settled within 14 days following the response of that Party, clause GCC.19.2.2 shall apply.

19.2.2. Any dispute between the Parties as to matters arising pursuant to this Contract that cannot be settled amicably according to clause GCC.19.2.1 and GCC.19.2.2 may be submitted by either Party for settlement in accordance with the provisions specified in the SCC.

19.2.3. Notwithstanding any reference to the settlement of dispute settlement herein:

a) The Parties shall continue to perform their respective obligations under the Contract unless they otherwise agree; and

b) Employer shall pay the Contractor any monies due to it.

SECTION V - SPECIAL CONDITIONS OF CONTRACT

The following Special Conditions of Contract (SCC) shall supplement and/or amend the General Conditions of Contract (GCC). Whenever there is a conflict, the provisions herein shall prevail over those in the GCC.

GCC Clause Ref., if any	Particulars
1.1.1 (xxvii)	The Project Manager shall be: ***Head, Infra Unit, Khorlochhu Hydro Power Limited.***
1.1.1 (xxix)	The Site is located at: ***New Doksum Township, Trashiyangtse***
1.1.1 (xxxi)	Completion of Works shall be attained within ***730 Days*** from the date of Contract Signing.
1.2.6 (a)	The applicable Incoterms edition shall be of: ***Incoterms 2020***
1.3.2	For notices, the addresses shall be: For the Employer: ***Head, Infra Unit,*** ***Khorlochhu Hydro Power Limited,*** ***Corporate Office, Doksum New Township, Trashiyangtse*** ***Email: head.infra@khpl.bt***
2.3.4	The list of manpower, equipment, raw material etc. to be provided by the Employer: ***Not Applicable***
3.1.6	The information board shall be with following details: (i) Name of Work: (ii) Start and Completion Date: (iii) Value of Work: (iv) Name of Contractor: (v) Name of Employer.
3.2.1 3.2.3	The amount of the Performance Security shall be: ***10% of Contract Price***. The types of acceptable Performance Securities are: *(i) Unconditional bank guarantee issued by a reputable financial institution enforceable in any banks in Bhutan, in the form provided for in the Contract or in any other form acceptable to the Employer.* *(ii) Cash warrant, or* *(iii) Demand Draft*
3.2.2	*For Contracts not deducting retention money, the Contractor shall extend the validity of the performance security until 30 days beyond defect liability period (DLP) before the release of final bill payment [Insert if applicable]*
3.12.1	The temporary utilities to be provided by Employer are: ***Not Applicable***.

GCC Clause Ref., if any	Particulars
5.1.1	Key Personnel:

Sl. No.	Qualification & Experience	Nos. Required
1	**Project Manager (**Degree) with min. 5 years working experience in similar works.	1 No.
2	**Project Engineer** (Degree with min. 5 years working experience or Diploma with min. 7 years working experience in similar works)	1 No.
3	**Electrical Engineer** (Degree with minimum of min. 3 or Diploma with min. 5 years working experience in similar works)**.**	1 No.
4	**Safety/OHS Officer** (Degree and/or certified in compliance to requirement of DoL, MoICE)	1 No.
5	**Site Supervisor** (VTI/TVET certificate holders with experience in similar works)	2 Nos.

The amount to be deducted for the key personnel not employed by the Contractor for each personnel shall be:

Sl. No.	Designation	Monthly Deduction for Non-Availability
1	Project Manager	Nu.50,000.00
2	Project Engineer	Nu.50,000.00
3	Electrical Engineer	Nu. 50, 000.00
4	Safety/OHS Officer	Nu. 30, 000.00
5	Site Supervisor	Nu. 25, 000.00

5.3.3

The amount to be deducted for the equipment not available at site is:

Sl. No.	Equipment	Monthly Deduction for Non-Availability
1	Excavator with/without Rock Breaker (200PC or higher)	Nu. 150,000.00
2	Dumper/Tripper	Nu.85,000.00
3	Concrete Mixer	Nu. 25,000.00
4	Transit Mixer	Nu.85,000.00

8.4.1

The applicable rate for liquidated damages for delay shall be 0.05% of Contract Price per each day of delay.

The maximum amount of liquidated damages shall be 10% of the Contract Price.

9.2.7

The permanent information board shall be with following details:

(i) Name of Work:
(ii) Completion Year:
(iii) Constructed by:
(iv) Name of Employer:

The date by which operating and maintenance manuals are required is: ***Not Applicable***.

The date by which "as built" drawings are required is 30 days upon taking over of works by the Employer.

10.1.1

10.3.2

The Defect Liability Period shall be 12 Months.

<table>
<tr><th>GCC Clause Ref., if any</th><th>Particulars</th></tr>
<tr><td>12.1.2</td><td>Fixed component of the Base Contract Price (F) = 20%

Variable components of the Base Contract Price:

1) Labour (l) = 30%

2) Materials(m) = 50%

L = Labour Index, All India Consumer Price Index for Industrial Workers (Base 2016=100), published by Labour Bureau, Ministry of Labour, India.

M = Material Index, All Commodities (2022-23=100) published by Office of the Economic Advisor, India.

D = Fuel (High Speed Diesel), the official retail price of HSD at Doksum, Trashiyangtse, published by MoICE, Royal Govt. of Bhutan.</td></tr>
<tr><td>13.1.1</td><td>The Contract Price is adjustable.</td></tr>
<tr><td>13.2.1 (a)</td><td>The Mobilization Advance Payment shall be a maximum of ten percent (10%) of the Contract Price against the submission of unconditional bank guarantee issued by a reputable financial institution and enforceable by any Banks in Bhutan.</td></tr>
<tr><td>13.2.2 (a)</td><td>The secured advance shall not be more than seventy-five (75%) of the cost of materials delivered at the site of work, which shall be supported by the original invoices/bills.

The Contractor shall be entitled to secured advance against the construction materials.

In exceptional circumstances, secured advance shall be given on account of plants & machineries: Not Applicable.</td></tr>
<tr><td>13.4.2</td><td>The present rate of tax deducted at source (TDS) of the gross value of the invoice is 2% in case of Bhutanese Bidders.</td></tr>
<tr><td>17.1</td><td>The nature and content, amounts and deductibles on insurance shall be as follows:
<table>
<tr><th>SN</th><th>Insurance</th><th>Amount Insured</th><th>Deductible</th></tr>
<tr><td>1</td><td>Loss of or damage to the Works including Employer issued materials, if any</td><td>110% of the cost of Works</td><td>Minimum as per insurance policy</td></tr>
<tr><td>2</td><td>Loss of or damage to the Contractor's tools and plant</td><td>110% of the cost of tools and plant</td><td>Minimum as per insurance policy</td></tr>
<tr><td>3</td><td>Loss of or damage to the property other than Works including those of third parties</td><td>As permissible under the policy</td><td>Not applicable</td></tr>
<tr><td>4</td><td>Injury or death of personnel belonging to the Contractor, Employer or any other party</td><td>As permissible under the policy</td><td>Not applicable</td></tr>
</table></td></tr>
<tr><td>19.2.2</td><td>Institution whose arbitration procedures shall be used:

<u>For Contracts with Bhutanese Contractors</u>

All disputes arising in connection with the present Contract shall be finally resolved by arbitration in accordance with the rules and procedures of the Alternate Dispute Resolution Act 2013.</td></tr>
</table>

SECTION VI – TECHNICAL SPECIFICATIONS & DRAWINGS

1. Scope of Works

The brief scope of work includes but not limited to the Construction of RCC Tank, one Intermediate RCC Tank, one Storage Tank and peripheral fencing. Water supply shall be provided through a 63 mm diameter, three-layer PP-R-pipe (PN 16) from the bore wells, with subsequent connection to the intermediate Tank and further distribution to the tank Located above the C-Type quarters and the Municipal Tank. The existing tank located above C-type quarter shall be retrofitted and upgraded to a total storage capacity of 349.00 m3. The scope further includes upgradation of the water supply system for Doksum Town from reservoir tank.

2. Technical Specifications

a) The works should correspond to the latest edition of the **"Specifications for Buildings and Road Works** published by Department of Infrastructure Development, MoIT, Thimphu.

b) Any specification not covered/included in the above document and/or any additional works overlooked in this contract and is deemed necessary to complete this contract, such works shall be permitted to be carried out with the prior approval of the Engineer In-Charge or the Project Manager-KHPL.

c) Contractor should adhere to any/all instructions from the Employer, as provided based on actual site condition during the execution of works.

3. Inspection and Tests

The inspection and tests shall confirm to the requirements as specified in the Bidding Document or the latest edition of the **"Specifications for Buildings and Road Works** published by Department of Infrastructure Development, MoIT, Thimphu.

4. Construction Drawings

The following Construction Drawings is provided under Annexure-I of this Bidding Document.

i) Architectural Drawings
ii) Civil/Structural Drawings
iii) Site Development Works

SECTION VII –FORMS

SECTION VIIA - BIDDING FORMS
(Form No. 1 to Form No. 15)

Applicable Forms from this Bidding Forms Section is to be submitted by the Bidder along with his Bid.

Form 1: Bid Security (Bank Guarantee)

(On non-judicial stamp paper of the value relevant to the place of execution)

*[The **Bank/Bidder** shall fill in this Bank Guarantee form in accordance with the instructions indicated in brackets .]*

_____

[Bank's Name, and Address of Issuing Branch or Office]

Beneficiary: _____ *[Name and Address of Employer]*

Date: _____

BID GUARANTEE No.: _____

We have been informed that *[name of the Bidder]* (hereinafter called "the Bidder") has submitted to you its Bid dated (hereinafter called "the Bid") for the execution of *[name of contract]* under Invitation for Bids No. *[IFB number]* ("the IFB").

Furthermore, we understand that, according to your conditions, Bids must be supported by a Bid Guarantee.

At the request of the Bidder, we *[name of Bank]* hereby irrevocably undertake to pay you any sum or sums not exceeding in total an amount of *[amount in figures]* (*[amount in words]*) upon receipt by us of your first demand in writing accompanied by a written statement stating that the Bidder is in breach of its obligation(s) under the bid conditions, because the Bidder:

(a) has withdrawn its Bid during the period of Bid validity specified by the Bidder in the Form of Bid; or

(b) having been notified of the acceptance of its Bid by the Employer during the period of Bid validity, (i) fails or refuses to execute the Contract Form, if required, or (ii) fails or refuses to furnish the Performance Security, in accordance with the Instructions to Bidders.

This guarantee will expire: (a) if the Bidder is the successful Bidder, upon our receipt of copies of the Contract signed by the Bidder and the Performance Security issued to you upon the instruction of the Bidder; or (b) if the Bidder is not the successful Bidder, upon the earlier of (i) our receipt of a copy of your notification to the Bidder of the name of the successful Bidder; or (ii) 30 days after the expiration of the Bidder's Bid.

Consequently, any demand for payment under this guarantee must be received by us at this office on or before that date.

_____

[signature(s)]

Form 2: Certificate Regarding Acceptance of Important Conditions

(To be kept in Envelope II)

To

[KHPL's Name and Address]

Dear Sir/Madam,

With reference to our Bid dated.....for..... *[insert name of the Works]* .....against NIT No....., we hereby conform that we have read the provisions of following clauses and further confirm that notwithstanding anything stated elsewhere to the contrary, the stipulations of these clauses are acceptable to us and we have not taken any deviation to any of these clauses anywhere in the Bid:

[List of clauses to be inserted as per BDS with clause reference no., and heading of the clause and document name]

i) .....

ii) .....

iii) .....

iv) .....

v) .....

vi) .....

vii) .....

viii) .....

ix) .....

We further confirm that any deviation to the above clauses, found anywhere in our Bid, implicit or explicit, shall stand unconditionally withdrawn without any cost implication whatsoever to KHPL failing which the Bid Security may be forfeited

Sealed and signed

Note: The above certificate is to be submitted in the sealed envelope along with the Technical Bid (envelop II). In absence of this certificate the Bid shall be rejected and returned

Form 3: Integrity Pact Statement

[Integrity Pact Statement pre-signed by the KHPL authorised signatory, as provided by the Anti-Corruption Commission (ACC of the Royal Government of Kingdom of Bhutan from time to time is to be used.]

1. General:

Whereas, **Mr. Sonam Rixin, General Manager, Contracts & Procurement Division,** representing the **Khorlochhu Hydro Power Limited (KHPL)**, hereinafter referred to as the **"Employer"** on one part, and *(Name of bidder or his/her authorized representative, with power of attorney)* representing M/s. (……..), hereinafter referred to as the **"Bidder"** on the other part hereby execute this agreement as follows:

1.1. This agreement shall be a part of the standard bidding document, which shall be signed by both the parties at the time of purchase of bidding documents and submitted along with the tender document. This IP is applicable only to "**large**" scale works, goods and services, the threshold of which will be announced by the government from time to time. The signing of the IP shall not apply to framework contracting such as annual office supplies etc.

2. Objectives:

Whereas, the Employer and the Bidder agree to enter into this agreement, hereinafter referred to as IP, to avoid all forms of corruption or deceptive practice by following a system that is fair, transparent and free from any influence/unprejudiced dealings in the **bidding process**[1] and **contract administration**[2], with a view to:

2.1. Enabling the Employer to obtain the desired contract at a reasonable and competitive price in conformity to the defined specifications of the works or goods or services; and

2.2. Enabling bidders to abstain from bribing or any corrupt practice in order to secure the contract by providing assurance to them that their competitors will also refrain from bribing and other corrupt practices.

3. Scope:

The validity of this IP shall cover the bidding process and contract administration period.

4. Commitments of the Employer:

The Employer Commits itself to the following:-

4.1. The Employer hereby undertakes that no officials of the Employer, connected directly or indirectly with the contract, will demand, take a promise for or accept, directly or through intermediaries, any bribe, consideration, gift, reward, favor or any material or immaterial benefit or any other advantage from the Bidder, either for themselves or for any person, organization or third party related to the contract in exchange for an advantage in the bidding process and contract administration.

4.2. The Employer further confirms that its officials shall not favor any prospective bidder in any form that could afford an undue advantage to that particular bidder in the bidding process and contract administration and will treat all Bidders alike.

4.3. Officials of the Employer, who may have observed or noticed or have reasonable suspicion shall report to the head of the employing agency or an appropriate government office any violation or attempted violation of clauses 4.1 and 4.2.

4.4. Following report on violation of clauses 4.1 and 4.2 by official (s), through any source, necessary disciplinary proceedings, or any other action as deemed fit, including criminal proceedings shall be initiated by the Employer and such a person shall be debarred from further dealings related to the bidding process and contract administration.

5. Commitments of Bidders

[1] Bidding process, for the purpose of this IP, shall mean the procedures covering tendering process starting from bid preparation, bid submission, bid processing, and bid evaluation.

[2] Contract administration, for the purpose of this IP, shall mean contract award, contract implementation, un-authorized sub-contracting and contract handing/taking over.

The Bidder commits himself/herself to take all measures necessary to prevent corrupt practices, unfair means and illegal activities during any stage of the bidding process and contract administration in order to secure the contract or in furtherance to secure it and in particular commits himself/herself to the following:-

5.1. The Bidder shall not offer, directly or through intermediaries, any bribe, gift, consideration, reward, favor, any material or immaterial benefit or other advantage, commission, fees, brokerage or inducement to any official of the Employer, connected directly or indirectly with the bidding process and contract administration, or to any person, organization or third party related to the contract in exchange for any advantage in the bidding process and contract administration.

5.2. The Bidder shall not collude with other parties interested in the contract to manipulate in whatsoever form or manner, the bidding process and contract administration.

5.3. If the bidder(s) have observed or noticed or have reasonable suspicion that the provisions of the IP have been violated by the procuring agency or other bidders, the bidder shall report such violations to the head of the procuring agency.

6. Sanctions for Violation:

The breach of any of the aforesaid provisions shall result in administrative charges or penal actions as per the relevant rules and laws.

6.1. The breach of the IP or commission of any offence (forgery, providing false information, mis-representation, providing false/fake documents, bid rigging, bid steering or coercion) by the Bidder, or any one employed by him, or acting on his/her behalf (whether with or without the knowledge of the Bidder), shall be dealt with as per the terms and conditions of the contract and other provisions of the relevant laws, including De-barment Rules.

6.2. The breach of the IP or commission of any offence by the officials of the procuring agency shall be dealt with as per the rules and laws of the land in vogue.

7. Monitoring and Administration:

7.1. The respective procuring agency shall be responsible for administration and monitoring of the IP as per the relevant laws.

7.2. The bidder shall have the right to appeal as per the arbitration mechanism contained in the relevant rules.

We, hereby declare that we have read and understood the clauses of this agreement and shall abide by it.

The parties hereby sign this Integrity Pact at *(place)* _____ on *(date)* _____

Affix Legal Stamp

Affix Legal Stamp

EMPLOYER

CID : 1 1 1 0 7 0 0 6 5 7 7

Witness: _____

Name:

CID :

BIDDER/REPRESENTATIVE

CID :

Witness: _____

Name:

CID :

Form 4: Bidder's Information Form

[The Bidder shall fill in this Form in accordance with the instructions indicated below. No alterations to its format shall be permitted and no substitutions shall be accepted.]

Date: .....*[insert date of Bid submission]*.....

NIT No.: .....

1.	Bidder's Legal Name:
2.	In the case of a Joint Venture (JV) legal name of each party:
3.	Bidder's or each member of JV's Registration No and date :
4.	Bidder's or Each member of JV's Year of Registration:
5.	Bidder's or Each member of JV's Regd. office Address:
6.	Bidder's or Lead member of JV's Local Address in Bhutan (if any) for correspondence:
7.	Bidder's or Each member of JV's Website Address:
8.	Bidder's or Each member of JV's Business Activities:
9.	Bidder's or Lead member of JV's Authorized Representative Name: Designation: Address: Telephone/Fax numbers: E-mail Address:
10.	Status of the Bidder (check the box as applicable): ☐ Bidding Company ☐ Lead Member of the Joint Venture

11.	Attached are copies of the following original documents: *[check the box(es) of the attached original documents]* ☐ Latest Tax Clearance Certificate of Bidder named in 1or 2 above ☐ Certificate of registration from the Construction Development Board ☐ Trade License ☐ Certificate of Incorporation or Registration of Bidder named in 1or 2 above ☐ Any other certificate to support the legal entity of the Bidder named in 1or 2 above

Sealed and Signed.....

Form 5A: Power of Attorney

(To be executed on non-judicial stamp paper of appropriate value)

KNOW ALL MEN BY THESE PRESENTS THAT WE, ……*[insert name of the Bidder]*……. a Company incorporated under the …….*[insert relevant statute of Bhutan]*……. and having its registered office at ……*[insert address]*……. (hereinafter referred to as the "Bidder") having been authorized by the Board of Directors of the Company, inter alia, to execute contracts in the name of and for and on behalf of the Company. I …….*[insert name of the person giving the power of attorney]*…….presently holding the position of …….. *[insert designation of the person giving the power of attorney]*…… in the company do hereby constitute, appoint and authorize Mr.…… [*insert name, designation and residential address of the person to whom the power of attorney is being given]*…… as our true and lawful attorney to do in our name and on our behalf all such acts, deeds, things necessary and incidental for submission of our Bid against NIT No. …….., floated by KHPL. I hereby further authorize the above attorney for signing and submission of the Bid and all other documents, information related to the Bid including undertakings, letters, certificates, declarations, clarifications, acceptances, guarantees, any amendments to the Bid and any other documents related to the Bid, and providing responses and representing us in all the matters before KHPL in connection with the Bid for the said NIT till the completion of the bidding process including signing of the contract.

I accordingly hereby nominate, constitute and appoint above named …… severally, as my lawful attorney to do all or any of the acts specifically mentioned immediately herein above.

WE do hereby agree and undertake to ratify and confirm whatever the said Attorney shall lawfully do or cause to be done under and by virtue of this power of Attorney and the Acts of Attorney to all intents and purposes are done as if I had done the same on behalf of the Company if these presents had not been made.

IN WITNESS whereof I, …….. have executed these presents this the …….day of ……at ……...

EXECUTANT

Signature: …….
Name: ….…….
Designation: ….……..……...

ACCEPTED:

Signature of Attorney:..…….
Name:.....……
Designation:…….....……..

Signature of the Attorney Attested
……
EXECUTANT
Name: ……..……
Designation: ……
Office Seal: ……

Note: *The Power of Attorney should be notarised as per applicable legal provisions in the kingdom of Bhutan*

Form 6: Information for Meeting Qualification Requirement (QR)

NIT No.:.....

Bidder's Name & Address:

.....

To
[KHPL's Name and Address]

Dear Sir/Madam,

We seek qualification under ITB. 16 and BDS and our qualification data in support thereof is enclosed in the following Forms:

1.	Form 6A	:	Financial Details of Bidder
2.	Form 6B	:	Details of Financial Capacity Status
3.	Form 6C	:	Present order book position
4.	Form 6D	:	Past Performance Data
5.	Form 6E	:	Data regarding Key Personnel
6.	Form 6F	:	Brief write up regarding Construction Methodology &Project Management

We further understand and agree that any misleading or false information furnished by us may result in summary rejection of our Bid.

Sealed and Signed.....

Note: The Bidder shall enclose relevant documents like copies of authenticated letter of awards, contracts, completion certificates etc. supporting the data and details provided in the Form 6A to 6F. In support of the financial information the audited accounts of the completed financial years shall be provided.

Form 6A: Financial Details of Bidder

(1- Annual Turnover)

(May be modified as per the requirements specified in the BDS)

Bidder's Name & Address:..... NIT No.:.....

To

[KHPL's Name and Address]

Dear Sir/Madam,

To satisfy the requirements stipulated in the Bidding Documents, we provide the following details.

We confirm that our average annual turnover during the preceding *[Insert no. of years]* financial years as on date of Bid opening is not less than ……*[insert the amount as per NIT]*……. In support of above, we are enclosing ……*[Balance Sheets and Profit & Loss Account duly certified by the statutory auditors, or Income Tax Return duly acknowledged by the tax department, or any other documents to be inserted as applicable]*……...

Sl. No.	Particulars	Amount in BTN
1.	Financial Year: 20.. – 20…	
2.	Financial Year: 20.. – 20…	
3.	Financial Year: 20.. – 20…	
4.	Average Annual Turnover for the preceding*[Insert no. of years]* () Financial Years as on date of Bid Opening.	
5.		

Sealed and Signed.....

Note:

i. Other income shall not be considered for calculation of Annual Turnover.

(2- Net worth)

Bidder's Name & Address:..... NIT No.:.....

To

[KHPL's Name and Address]

Dear Sir/Madam,

To satisfy the requirements stipulated in the Bidding Documents, we provide the following details.

We hereby confirm that net worth of our company as on the last day of the preceding financial year is not less than …….*[indicate in %]* ….of its paid-up share capital.

The Details are as under:

Sl. No.	**Description**	**As on last day of the preceding financial year (BTN)**
1	Paid-up share capital	
2	Net Worth	
3	% of Net Worth to paid-up Share Capital	
4	Documentary evidence like Audited financial statements for the last preceding financial year or in case Audited results for the last Financial Year is not available certification of financial statements from a practicing Chartered Accountant etc. in support of above is enclosed at Appendix..... to this Form 6A	

Sealed and Signed.....

Note:

Net worth shall be defined as:

= Paid up share capital

Add: Reserves net of losses
Subtract: Revaluation reserves
Subtract: Intangible Assets
Subtract: Miscellaneous expenditures to the extent not written off

(3- Line of Credit)

Bidder's Name & Address:..... NIT No.:.....

To

[KHPL's Name and Address]

Dear Sir/Madam,

To satisfy the requirements stipulated in the Bidding Documents, we provide the following details.

We hereby confirm that unutilised line of credit for fund based and non-fund based limits with cash & bank balances including fixed deposits of our company, duly certified by the bankers as on a date not earlier than fifteen (15) days prior to the date of bid opening, is not less than BTN…….....

The details are as under:

Sl. No.	**Description**	**Amount in BTN, 15 days prior to the date of bid opening**
1	Sanctioned Line of credit Bank Guarantees Cash credit Letter of credit	
2	Utilised Line of credit Bank Guarantees Cash credit Letter of credit	
3	Unutilised Line of credit Bank Guarantees Cash credit Letter of credit	
4	Certificate from the Bankers in respect of unutilised Line of credit as above is enclosed at Appendix.....to this Form 6A	

Sealed and Signed.....

Note:

- *In case certificates from more than one bank are submitted, the certified unutilized limit shall be of the same date from all such banks*
- *In case the unutilised line of credit is not meeting the requirement prescribed a comfort letter from the bank in the proforma should be submitted along with the bid.*

Form 6B: Details of Financial Capacity Status

(May be modified as per the requirements specified in the BDS)

Bidder's Name & Address:..... NIT No.:.....

To

[KHPL's Name and Address]

A	Orders in Hand	
i	Total value of Contracts	
ii	Value of work completed out of above value upto ……..	
iii	Value of anticipated work to be done in the following …….Financial Years out of (i) above : a) ..... b) ..... c)	
B	Bidder's assessment of maximum negative cash flow (fund requirement)at any point of time between Letter of Award and completion of Contract based on specified terms of payment and his expenditure plan for materials and equipment required for the Works.	
C	Arrangement to meet the above fund requirement.	Own Funds-/Credit /Others/Total
D	Declaration by Bankers regarding:	
	i) Bank Guarantee Limits Sanctioned and unutilised as on (a date not later than 15 days prior to date of bid opening).	Letter from Bank Enclosed at Appendix....
	ii) Over Draft Limits/Cash Credit Limits – Sanctioned and un-utilised as on (a date not later than 15 days prior to date of bid opening).	Letter from bank Enclosed at Appendix.....
	iii) Cash and Bank Balances including Fixed Deposits	
	iv) Movable Property Hypothecation. (Please state the present utilisation status also	
E	i) Information regarding any current litigation in which the Bidder is involved, the parties concerned, the dispute sand the disputed amount if any.	

Sealed and Signed

Note:

- *Continuation sheets of like size and format, may be used and annexed to this Form if required.*

Form 6C: Present Order Book Position

Bidder's Name & Address:..... NIT No.:.....

To

[KHPL's Name and Address]

List of works under execution and their present status

Sl. No.	Owner/ Client (Name and address)	Project Name & Scope of Work	Order Value	Date of Order	Schedule Time of Completion	Value of Outstanding Work	Actual/ Expected Time of Completion	Reason for Delay (if any)

We hereby confirm that the information above is true and correct. We have not concealed any information and we understand that any wilful misstatement described above will lead to disqualification before award or termination of the Contract with all consequential losses to our account.

Sealed and Signed.....

Note:

- *Continuation sheets of like size and format, may be used and annexed to this Form if required.*
- *Relevant documents/LOA/Orders to be furnished to justify the data above.*

Form 6D: Past Performance Data

Bidder's Name & Address:..... NIT No.:.....

To

[KHPL's Name and Address]

Details of similar Works in last .....*[insert number of years]*..... years

Sl. No.	**Owner/ Client** (Name and address)	**Project Name &Scope of Work**	**Order Value**	**Date of Order**	**Schedule Completion Date**	**Actual/Expected Completion Date**	**Reason for Delay (if any)**

Sealed and Signed.....

Note:

- *Continuation sheets of like size and format, may be used and annexed to this Form if required.*
- *Relevant documents/LOA/Orders/Certificate from the client to be furnished to justify the data above.*
- *The details of similar works should be given atleast for those no of works as specified in the qualification requirements. Subsequent to submission of the bid no further details will be accepted.*

Form 6E: Data regarding Key Personnel

Bidder's Name & Address:..... NIT No.:.....

To

[KHPL's Name and Address]

The qualification and experience of key personnel proposed for administration and execution of the Contract at the Site are as follows:-

Sl. No.	Proposed Position	Name	Position Held since	Professional Qualification	Experience in relevant Field	Any other Information
1						
2						
3						
4						
5						
6						
7						
8						
9						

Sealed and Signed

Note:

i. *Please furnish the complete Site organization chart proposed to be set up for execution of the Contract.*
ii. *Continuation sheets of like size and format, may be used and annexed to this Form if required.*

Form 11: Deviation Schedule

NIT No.:.....

Bidder's Name & Address:

.....

To:

[Employer's relevant official, name and address]

Sir/Madam,

The following are the deviations and variations from and exceptions to the terms, conditions and specifications of the Bidding Documents for procurement of….....*[insert brief description of works]* …….... These deviations and variations are exhaustive. We are furnishing below the cost of withdrawal for the deviations and variations stated in this Form. We shall withdraw the deviations proposed by us in this Form at the cost of withdrawal indicated herein, failing which our Bid may be rejected and bid security forfeited.

We confirm that except for the deviations and variations stated in this Form to our Bid, the entire work shall be performed as per specifications and conditions of the Bidding Documents without any extra cost to Employer, irrespective of any mention to the contrary anywhere else in the Bid, failing which our Bid may be rejected and Bid security forfeited.

Further, we agree that additional condition, deviation, if any, found in the Bidding Documents other than those stated in this Form, save those pertaining to any rebates offered, shall not be given effect to.

Section / Clause No	Page No.	Statement of Deviations

Date :

Place :

(Signature).....

(Printed Name).....

(Designation).....

(Seal).....

Note: Continuation sheets of like size and format may be used and annexed to this Form if required.

Form 14: Bid Submission Form

(To be submitted on Bidder's letter head)

Name and Description of Works: .....

.....

To NIT No.:.....

[KHPL's Name and Address]

Dear Sir,

We, the undersigned, declare that:

a) Having examined all the Bidding Documents (with reference ITB 10), including addenda *[insert list]*, we offer to execute the (*name and title of the contract/work*) in accordance with the Conditions of Contract accompanying this Bid for the Contract Price of *BTN*……. *(In figures), Ngultrums*……. *(In words).*

b) This Bid and your written acceptance of it shall constitute a binding Contract between us. We understand that you are not bound to accept the lowest or any Bid you receive.

c) We hereby confirm that this Bid complies with the Bid validity and Bid Security required by the Bidding Documents and specified in the Bidding Data Sheet.

d) We, including any subcontractors for any part of the Contract, have nationalities from eligible countries in accordance with ITB Clause 7;

e) We have no conflict of interest in accordance with ITB sub clause 5.2;

f) Our firm, its affiliates or subsidiaries—including any subcontractors for any part of the Contract—has not been declared ineligible under the laws or official regulations of Bhutan, in accordance with ITB Clause 6 and other relevant clauses.

g) Commissions or gratuities, if any, paid or to be paid by us to agents relating to this Bid, and to contract execution if we are awarded the contract, are listed below:

Name & address of agent	Amount & Currency	Purpose of commission or gratuity

** If none, please state none*

h) Our duly executed Integrity Pact Statement is attached herewith.

i) We accept the vendor performance management system.

Authorized Signature: _____ *(Affix legal stamp)*

Name and title of signatory:_____

Name of Bidder: _____

Address: _____

Form 15: Bill of Quantities

Abstract of Cost-BoQ

SN	Description	Total Cost	Remarks
A	**PRINCIPAL'S QUARTER**		
1	Civil Works		
2	Electrical Works		
	Sub-Total A		
B	**CARETAKER'S RESIDENCE**		
1	Civil Works		
2	Electrical Works		
	Sub-Total B		
C	**ADMINSTRACTIVE BLOCK WITH CLASSROOM**		
1	Civil Works		
2	Electrical Works		
	Sub-Total C		
D	**LIBRARY AND LABORATORY**		
1	Civil Works		
2	Electrical Works		
	Sub-Total D		
E	**CLASSROOM 2 BLOCKS**		
1	Civil Works		
2	Electrical Works		
	Sub-Total E		
F	**MULTIPURPOSE HALL**		
1	Civil Works		
2	Electrical Works		
	Sub-Total F		
G	**TOILET FOR BOYS AND GIRLS**		
1	Civil Works		
2	Electrical Works		

SN	Description	Total Cost	Remarks
	Sub-Total G		
H	**KITCHEN**		
1	Civil Works		
2	Electrical Works		
	Sub-Total H		
I	**ANCILLARY WORK:**		
1	SITE DEVELOPMENT		
2	RETAINING WALLS		
3	CHAIN LINK FENCE		
4	INTERLINK FOOTPATH		
5	INTERNAL ROAD WITH PARKING		
6	RRM STAIRCASE FOR RAMP		
7	WALKWAY FOR RAMP		
8	INTERNAL ROAD WITH PARKING		
9	MS RAILING FOR FOOTPATH AND WALL TOP		
10	SEWERAGE LINE, PIPELINE AND DRAINAGE		
11	COURTYARD		
12	COMPOUND GATE		
13	RRM WATER TANK		
14	COMPOUND LIGHTING		
	Sub-Total I		
J	**Occupational Health & Safety (OHS)**		
	Sub-Total J		
	GRAND TOTAL		

In Words:

I. Buildings

1. Principal's Quarter

SN	Description	Unit	Qty	Rate in Nu.		Total Amount (Nu.)
				Figure	Words	
1	**Earthwork**					
1.1	Excavation in foundation trenches or drains, not exceeding 1.5 m in width or 10 sq.m on plan, including setting out, dressing of sides, ramming and leveling of bottoms, and disposal of surplus excavated material within 50 m lead and 1.5 m lift, in all kinds of soil and rock, with or without blasting, complete.	cu.m	143.34			
1.2	Filling of trenches, sides of foundations, areas to be raised etc. including compaction in layers < 200mm using selected excavated earth within lead 50m &lift 1.5m.	cu.m	93.19			
1.3	Providing and laying dry earth bedding, including consolidating each deposited layer by watering, ramming and dressing.	cu.m	13.94			
2	**Damp Proof Course**					
2.1	Providing & laying 75mm thick sand bedding, including watering, ramming and dressing.	cu.m	6.94			
2.2	Providing and laying moisture barrier using plastic sheeting underlay -200 micrometer.	sq.m	113.03			
3	**Stonework**					
3.1	Providing and laying Hand packed stone soling/ coarse aggregate filling with hard stone.	cu.m	44.17			
3.2	Providing and laying Random Rubble Masonry with hard stone in CM 1:4 in foundation and upto plinth level.	cu.m	48.08			
4	**Concrete Work**					
4.1	Providing and laying in position plain cement concrete -1:3:6 (1 cement: 3 sand: 6 graded crushed rock 20 mm nominal size) excluding the cost of centering and shuttering - All work upto plinth level.	cu.m	24.50			

SN	Description	Unit	Qty	Rate in Nu.		Total Amount (Nu.)
				Figure	Words	
4.2	Providing and laying in plain cement concrete - 1:2:4 (1 cement: 2 sands: 4 graded crushed rock 20 mm nominal size) excluding the cost of centering and shuttering - All work upto plinth level.	cu.m	8.74			
5	**RCC Work**					
5.1	Providing & laying in position reinforced cement concrete 1:1.5:3 (1 cement: 1.5 sand: 3 graded crushed rock 20 mm nominal size) excluding the cost of centering, shuttering and reinforcement - all work upto plinth level.	cu.m	19.88			
5.2	Providing & laying in position reinforced cement concrete 1:1.5:3 (1 cement: 1.5 sand: 3 graded crushed rock 20 mm nominal size) in columns, Pillars, posts above plinth up to roof excluding the cost of centering, shuttering and reinforcement.	cu.m	5.01			
5.3	Providing & laying in position reinforced cement concrete 1:1.5:3 (1 cement: 1.5 sand: 3 graded crushed rock 20 mm nominal size) in beams, lintels, slabs, staircase above plinth up to roof excluding the cost of centering, shuttering and reinforcement.	cu.m	14.13			
6	**Steel Reinforcement**					
6.1	Providing & fixing Thermo-Mechanically Treated reinforcement bar (Yield Strength 500 MPa) for R.C.C work including cutting, bending, binding and placing in position complete.	kg	10,962.80			
7	**Form Work**					
7.1	Providing & fixing centering and shuttering (formwork) using Timber, including strutting, propping etc. and removal of formwork-Foundation, Footings and all works upto Plinth Level, etc.	sq.m	40.25			
7.2	Providing & fixing centering and shuttering (formwork) using Shuttering Plywood, including Timber frame and timber strutting, propping with complete form tie system etc., and removal of formwork- Columns, Pillars, Post, Struts, etc.	sq.m	75.44			

SN	Description	Unit	Qty	Rate in Nu.		Total Amount (Nu.)
				Figure	Words	
7.3	Providing & fixing centering and shuttering (formwork) using Shuttering Plywood, including Timber frame and timber strutting, propping with complete form tie system etc., and removal of formwork- Lintels, Beams, Griders, Bresummers, Cantilevers etc.	sq.m	280.76			
7.4	Providing & fixing centering and shuttering (formwork) using Shuttering Plywood, including Timber frame and timber strutting, propping with complete form tie system etc., and removal of formwork- Slab, Suspended floor, roof and landing.	sq.m	108.65			
8	**Coursed Rubble Masonry/ Concrete Cement Block works**					
8.1	Providing & laying Coursed Rubble Masonry with hard stone hammer-dressed laid in cement mortar 1:4 (1 cement: 4 sand) in foundation, plinth and in superstructure, complete in all respects.	cu.m	30.82			
8.2	Providing & laying locally manufactured Concrete Solid Block Masonry (115mm) in superstructure below floor 2 level in cement mortar 1:4.	sq.m	79.82			
9	**Doors and Windows**					
9.1	Providing & fixing in position dressed wood work in frame for window including aluminum framed windows in position with all accessories, including sliding shutters glazed with 5 mm thick plain glass, pelmet and curtain rod, and all required fittings, fixtures, and holdfasts, complete as per drawings and specifications. Rate includes traditional RCC cornices, synthetic enamel painting on internal woodwork, and traditional painting on internal and external surfaces, complete as directed by the Engineer-in-Charge.					
9.1.1	W164	each	1			
9.1.2	W165	each	3			
9.1.3	W210	each	4			
9.1.4	V95	each	2			

SN	Description	Unit	Qty	Rate in Nu.		Total Amount (Nu.)
				Figure	Words	
9.2	Providing & fixing in position dressed wood work in frame for door including flush door shutter (prefabricated), block-board with ply veneer 35mm thick treated with anti-termite polishes with all fittings & fixtures & hold fasts as per drawing complete. Rate includes traditional RCC cornices, synthetic enamel painting on internal woodwork, and traditional painting on internal and external surfaces, complete as directed by the Engineer-in-Charge.					
9.2.1	D80	each	2			
9.2.2	D85	each	2			
9.2.3	D90	each	3			
9.2.4	DW255	each	1			
10	**Steel work**					
10.1	Steel work welded, in built up sections, trusses, frame-works including cutting, hoisting, fixing and appl. priming coat of red lead paint- In Tubular sections.	kg	1968.62			
10.2	Steel work welded, in built up sections, trusses, frame-works including cutting, hoisting, fixing and appl. priming coat of red lead paint- In M.S Angles/ Tee for external ceiling.	kg	374.28			
10.3	Providing and fixing MS round hold-down bolts with nuts and washer plates, complete in all areas.	kg	31.25			
10.4	Providing & fixing bolts of various sizes including nuts & washers.	kg	15.44			
10.5	Providing, making and fixing, M.S Gusset Plate, straps, flats, sole plates etc., complete in roof truss work.	kg	180.17			
11	**Roof Work**					
11.1	Providing & fixing Pre - Painted Galvanised Iron (PPGI) sheets, including bolts, hooks and nuts 8mm dia. with bitumen and G.I limpet washers filled with white lead for connection, excluding the cost of purlins, rafter and trusses (24g, 0.50mm).	sq.m	211.62			

SN	Description	Unit	Qty	Rate in Nu.		Total Amount (Nu.)
				Figure	Words	
11.2	Providing & fixing 600mm ridges or hips in Pre Painted Steel sheets, including bolts, hooks and nuts 8mm dia G.I limpet and bitumen washers for connection. -25g	m	37.19			
11.3	Providing and fixing to frames 8mm thick Cement Fibre Board in ceiling or sofit including ceiling frames as per manufacturer's specifications (sample to be approved by client).	sq.m	86.55			
11.4	Providing & fixing Eaves board (225x25mm) with moulding fitted and fixed with necessary screws.	m	57.70			
11.5	Providing and fixing on wall face single socketed rigid PVC (Working Pressure 4kgf per sq.cm) rain water pipes including jointing with seal ring leaving 10 mm gap for thermal expansion- complete. -90mm dia.	m	18.40			
11.6	Providing & fixing Semi circular/half round Poly Vinyl Chloride (PVC) roof gutter of 180mm dia 3.04m long, including fittings (brackets, bolts, nuts, washer, end cap, tee end cap etc.) excluding the cost of pipes.	m	57.70			
12	**Traditional Cornices**					
12.1	Providing & fixing in position dressed wood work in frames of doors, windows, clerestory windows and other frames, wrought and framed - Class 'B' (conifer) for verandah railing.	cu.m	0.26			
12.2	Providing & fixing traditional wooden Tshegay for windows\railing etc. as per standard design -In Class 'B' (conifer) for verandah railing.	sq.m	3.07			
12.3	Providing, preparing and applying Sumdang washable painting - Ding for verandah railing.	sq.m	3.53			
13	**Flooring Works**					
13.1	Providing and laying Vitrified Tiles (600*600*10mm) in floorings laid on a bed of 12mm thick cement mortar of 1:3 finished with flush pointing in white cement.	sq.m	87.66			

SN	Description	Unit	Qty	Rate in Nu.		Total Amount (Nu.)
				Figure	Words	
13.2	Providing and laying Vitrified Tiles in skirtings on a bed of 12mm thick cement mortar of 1:3 finished with flush pointing in white cement -150mm height.	sq.m	7.76			
13.3	Providing and laying Anti-Skid Tiles (600*600*10mm) in floors on a bed of 12mm thick cement mortar of 1:3 finished with flush pointing in white cement.	sq.m	7.88			
13.4	Providing and laying Ceramic Tiles (300*300*10mm) in walls on a bed of 12mm thick cement mortar of 1:3 finished with flush pointing in white cement.	sq.m	33.74			
13.5	Providing and laying Pre-Polished/ Polished Granite of approved quality and source in flooring using necessary cement bedding in C.M. 1:4 upto 20 mm thick average cement slurry for fixing the tiles with required slopes, curing, cleaning, filling the joints with pigments of similar colour and at all levels with all leads and lifts etc. ...complete as per directions of site in-charge and as per pattern required. - 18mm Thick granite stone flooring over 18mm thick base of cement mortar 1:4.	sq.m	3.12			
14	**Finishing Work**					
14.1	Providing and laying cement plaster in CM 1:4, 15 mm thick (Inside wall).	sq.m	301.67			
14.2	Providing & laying cement plaster, finished with floating coat of neat cement -20mm plaster in C.M 1:4.	sq.m	22.62			
14.3	Providing and laying 6mm thick cement plaster in C.M 1:4 in ceiling.	sq.m	105.13			
14.4	Providing & applying putty of thickness 2mm or more over plastered surface to prepare the surface even and smooth complete.	sq.m	406.80			
14.5	Providing and applying finishing coats Acrylic washable distemper, two coats on new work, including cement primer coat for internal walls and room ceiling.	sq.m	406.80			

SN	Description	Unit	Qty	Rate in Nu.		Total Amount (Nu.)
				Figure	Words	
14.6	Providing and applying finishing coats synthetic enamel paint - 2 coats on new work including applying primer for external ceiling and internal portion for window & door.	sq.m	140.91			
15	**Plumbing Works**					
15.1	Providing and fixing 3-layer PP-R (Polypropylene Random Copolymer) PN 16 pipes, SDR 7.4 UV Stabilized and anti-microbial fusion welded, having thermal stability for hot and cold-water supply including all PP-R plain and brass Threaded Polypropylene random fittings including connection from existing GI-pipe, excluding trenching, refilling but including testing of joints complete as per direction of Engineer-in- Charge. - 32mm.	m	10.00			
15.2	Providing and fixing 3-layer PP-R (Polypropylene Random Copolymer) PN 16 pipes, SDR 7.4 UV Stabilized and anti-microbial fusion welded, having thermal stability for hot and cold-water supply including all PP-R plain and brass Threaded Polypropylene random fittings excluding trenching, refilling but including testing of joints complete as per direction of Engineer-in- Charge. - 25mm.	m	18.00			
15.3	Providing and fixing 3-layer PP-R (Polypropylene Random Copolymer) PN-16 pipes, SDR 7.4 UV Stabilized and anti-microbial fusion welded, having thermal stability for hot and cold-water supply including all PP-R plain and brass Threaded Polypropylene random fittings including fixing pipe with clamps at 1.0m spacing. This includes testing of joints, cutting chases and making good the wall complete as per direction of Engineer-in- Charge. - 20mm.	m	48.61			
15.4	Providing & fixing European-type vitreous China w.c One piece Toilet with seat cover, repairing walls complete.	each	2			

SN	Description	Unit	Qty	Rate in Nu.		Total Amount (Nu.)
				Figure	Words	
15.5	Providing & fixing white vitreous China wash basin, including C.I brackets, 15mm C.P. brass pillar taps, c.p. chain & rubber plug, 32mm pvc waste, 32mm dia. trap & union, repair walls Flat back wash basin 630x450mm with a pair of 15mm c.p. brass pillar taps.	each	2			
15.6	Providing & fixing 600x450mm bevelled edge mirror (superior glass) incl.4mm A.C sheet base fixed to wooden cleats.	each	2			
15.7	Providing & Fixing soap dish- including brackets, wooden cleats, c.p. brass screws.	each	4			
15.8	Providing & Fixing toilet paper holder (C.P. brass)	each	2			
15.9	Providing & fixing c.p. towel rail 750 x 20mm with c.p brass brackets fixed to wooden cleats.	each	2			
15.10	Providing & fixing Electric water heater including necessary fittings. -50 liters	each	2			
15.11	Providing & fixing Electric water heater including necessary fittings. -10 litres	each	1			
15.12	Providing & fixing Kitchen Sinks including all connections and fittings. -Stainless steel, 1740*520*200mm, double bowl & single drain-board.	each	1			
15.13	Providing & fixing c.p. brass mixers, 15mm. -For wall, non-telephonic type.	each	2			
15.14	Providing & fixing c.p. brass mixers, 15mm -For sink, with casted spout swinging for kitchen sink.	each	1			
15.15	Providing & fixing c.p. brass bibcock- 15mm, long body, c.p. knob.	each	2			
15.16	Providing & fixing c.p. brass stop cock -15mm, angle, c.p knob.	each	12			
15.17	Providing and fixing c.p glass shelt (450x120) mm fixed to wooden cleats, complete.	each	2			
15.18	Providing & fixing plastic tank including all accessories complete - 1000-liter capacity.	each	1			
16	**Sewerage Works**					

SN	Description	Unit	Qty	Rate in Nu.		Total Amount (Nu.)
				Figure	Words	
16.1	Hand excavation and refilling in layers < 200mm, of trenches for pipes & sockets, cables, including dressing of sides/ ramming of bottom, depth upto 1.5m, disposal of surplus material within lead of 50m: All kinds of soil-Pipes, cables etc. 80mm < dia < 300mm.	m	72.00			
16.2	Providing & laying H.D.P.E Pipes, 4 PN, including H.D.P.E fittings (excluding trenching, refilling & thrust block) -110mm.	m	60.00			
16.3	Providing & fixing P.V.C soil waste and vent pipes, single or double socketed, including pipe clip complete (including the cost of PVC fittings)-75mm.	m	12.00			
16.4	Providing & fixing P.V.C waste pipes, single or double socketed in floors, (excluding the cost of PVC fittings) -110mm.	m	12.00			
16.5	Providing & fixing P.V.C waste pipes, single or double socketed in floors, (excluding the cost of PVC fittings) - 75mm dia.	m	12.00			
16.6	Providing & fixing P.V.C Nahani Trap. -110mm inlet & 75mm outlet.	each	2			
16.7	Providing & fixing P.V.C bend with door cap- 75mm dia.	each	2			
16.8	Providing & fixing P.V.C bend with door cap- 110mm dia.	each	2			
17	**External Works**					
17.1	Providing and laying 50mm thick Plinth Protection and grouted with fine sand mix including well rammed, finishing the top smooth. -With cement concrete 1:3:6, 20mm aggregates, laid over 75mm thick layer of compacted gravel (40mm).	sq.m	84.83			

SN	Description	Unit	Qty	Rate in Nu.		Total Amount (Nu.)
				Figure	Words	
17.2	Constructing second class brick masonry open surface drain in cement mortar 1:4 including earth work in excavation 100 mm thick concrete bed 1:5:10, 40mm aggregate and 25mm thick cement concrete 1:2:4,12 mm aggregate for filling haunches including 12mm cement plastering 1:4 with a floating coat of neat cement and disposal of surplus earth etc. complete-150mm wide x 200mm average depth.	m	56.55			
17.3	Constructing Brick masonry manhole/ inspection chamber in cement mortar 1:4, R.C.C top slab with 1:2:4 20mm aggregates, foundation concrete 1:4:8 40mm aggregates, 12mm plaster in CM 1:3 finished, inside dimension 800mm x 900mm & 450mm deep & additional depth as per site requirement including C.I. cover & frame (weight >38 kg).	each	5.00			
	Sub Total (Principal Quarter)					

2. Caretaker's Residence

SN	Description	Unit	Qty	Rate in Nu.		Total Amount (Nu.)
				Figure	Words	
1	**Earthwork**					
1.1	Excavation in foundation trenches or drains, not exceeding 1.5 m in width or 10 sq.m on plan, including setting out, dressing of sides, ramming and leveling of bottoms, and disposal of surplus excavated material within 50 m lead and 1.5 m lift, in all kinds of soil and rock, with or without blasting, complete.	cu.m	36.78			
1.2	Filling of trenches, sides of foundations, areas to be raised etc. including compaction in layers < 200mm using selected excavated earth within lead 50m & lift 1.5m.	cu.m	15.63			

SN	Description	Unit	Qty	Rate in Nu.		Total Amount (Nu.)
				Figure	Words	
1.3	Providing and laying dry earth bedding, including consolidating each deposited layer by watering, ramming and dressing.	cu.m	16.72			
2	**Damp Proof Course**					
2.1	Providing & laying 75mm thick sand bedding, including watering, ramming and dressing.	cu.m	4.76			
2.2	Providing and laying moisture barrier using plastic sheeting underlay -200 micro meter.	sq.m	63.50			
3	**Stonework**					
3.1	Providing and laying Hand packed stone filling or soling with stones	cu.m	17.28			
3.2	Providing and laying Random Rubble Masonry with hard stone in CM 1:4 in foundation and upto plinth level.	cu.m	36.47			
4	**Concrete Work**					
4.1	Providing and laying in position plain cement concrete -1:3:6 (1 cement: 3 sand: 6 graded crushed rock 20 mm nominal size) excluding the cost of centering and shuttering - All work upto plinth level.	cu.m	8.64			
4.2	Providing and laying in position plain cement concrete - 1:2:4 (1 cement: 2 sand: 4 graded crushed rock 20 mm nominal size) excluding the cost of centering and shuttering - All work upto plinth level.	cu.m	5.02			
5	**RCC Work**					
5.1	Providing & laying in position reinforced cement concrete 1:1.5:3 (1 cement: 1.5 sand: 3 graded crushed rock 20 mm nominal size) excluding the cost of centering, shuttering and reinforcement - all work upto plinth level.	cu.m	18.75			
5.2	Providing & laying in position reinforced cement concrete 1:1.5:3 (1 cement: 1.5 sand: 3 graded crushed rock 20 mm nominal size) in columns, Pillars, posts above plinth up to roof excluding the cost of centering, shuttering and reinforcement.	cu.m	0.53			

SN	Description	Unit	Qty	Rate in Nu.		Total Amount (Nu.)
				Figure	Words	
5.3	Providing & laying in position reinforced cement concrete 1:1.5:3 (1 cement: 1.5 sand: 3 graded crushed rock 20 mm nominal size) in beams, lintels, slabs, staircase above plinth up to roof excluding the cost of centering, shuttering and reinforcement.	cu.m	4.47			
6	**Steel Reinforcement**					
6.1	Providing & fixing Thermo-Mechanically Treated reinforcement bar (Yield Strength 500 MPa) for R.C.C work including cutting, bending, binding and placing in position complete.	kg	1928.06			
7	**Form Work**					
7.1	Providing & fixing centering and shuttering (formwork) using Timber, including strutting, propping etc. and removal of formwork-Foundation, Footings and all works upto Plinth Level, etc.	sq.m	60.63			
7.2	Providing & fixing centering and shuttering (formwork) using Shuttering Plywood, including Timber frame and timber strutting, propping with complete form tie system etc., and removal of formwork- Columns, Pillars, Post, Struts, etc.	sq.m	41.97			
7.3	Providing & fixing centering and shuttering (formwork) using Shuttering Plywood, including Timber frame and timber strutting, propping with complete form tie system etc., and removal of formwork- Lintels, Beams, Griders, Bresummers, Cantilevers etc.	sq.m	10.56			
8	**Coursed Rubble Masonry/ Cement Concrete Block**					
8.1	Providing &laying Coursed Rubble Masonry with hard stone hammer-dressed in foundation & plinth (In cement mortar 1:4) including superstructure above plinth level upto floor three level (including all lifts and heights) - 400mm Thick.	cu.m	44.70			
8.2	Providing & laying concrete block brick in Foundation & Plinth including superstructure above	cu.m	12.70			

SN	Description	Unit	Qty	Rate in Nu.		Total Amount (Nu.)
				Figure	Words	
	plinth level upto floor three level (including all lifts and heights) - 250mm Thick.					
9	**Door and Window**					
9.1	Providing & fixing in position dressed wood work in frame for door including flush door shutter (prefabricated), block-board with ply vaneer 35mm thick treated with anti-termite polishes with all fittings & fixtures & hold fasts as per drawing complete. Rate includes traditional RCC cornices, synthetic enamel painting on internal woodwork, and traditional painting on internal and external surfaces, complete as directed by the Engineer-in-Charge.					
9.1.1	D95	each	1			
9.1.2	D85	each	2			
9.1.3	D100	each	1			
9.2	Providing & fixing in position dressed wood work in frame for window including aluminium framed windows in position with all accessories, including sliding shutters glazed with 5 mm thick plain glass, pelmet and curtain rod, and all required fittings, fixtures, and holdfasts, complete as per drawings and specifications. Rate includes traditional RCC cornices, synthetic enamel painting on internal woodwork, and traditional painting on internal and external surfaces, complete as directed by the Engineer-in-Charge.					
9.2.1	W219	each	5			
9.2.2	KW150	each	1			
9.2.3	V80	each	1			
9.2.4	KW50	each	2			
10	**Steel work**					
10.1	Steel work welded, in built up sections, trusses, frame-works including cutting, hoisting, fixing and appl. priming coat of red lead paint- In Tubular sections.	kg	1322.58			
10.2	Steel work welded, in built up sections, trusses, frame-works including cutting, hoisting, fixing and appl.	kg	319.79			

SN	Description	Unit	Qty	Rate in Nu.		Total Amount (Nu.)
				Figure	Words	
	priming coat of red lead paint- In M.S Angles/ Tee for external ceiling.					
10.3	Providing & fixing M.S. round hold-down bolts with nuts and washer plates.	kg	67.27			
10.4	Providing & fixing bolts of various sizes including nuts & washers.	kg	8.88			
10.5	Providing, making and fixing, M.S Gusset Plate, straps, flats, sole plates etc., complete in roof truss work.	kg	436.54			
11	**Roof Work**					
11.1	Providing & fixing Pre - Painted Galvanised Iron (PPGI) sheets, including bolts, hooks and nuts 8mm dia. with bitumen and G.I limpet washers filled with white lead for connection, excluding the cost of purlins, rafter and trusses (24g, 0.50mm).	sq.m	100.20			
11.2	Providing & fixing 600mm ridges or hips in Pre Painted Steel sheets, including bolts, hooks and nuts 8mm dia G.I limpet and bitumen washers for connection. -25g	m	11.05			
11.3	Providing and fixing to frames 8 mm thick Cement Fibre Board in ceiling or sofit including ceiling frames as per manufacturer's specifications (sample to be approved by client)	sq.m	92.01			
11.4	Providing & fixing Eaves board (225x25mm) with moulding fitted and fixed with necessary screws - Mixed Conifer.	m	43.90			
11.5	Providing and fixing on wall face single socketed rigid PVC (Working Pressure 4kgf per sq.cm) rain water pipes including jointing with seal ring leaving 10 mm gap for thermal expansion- complete. -90 mm dia.	m	11.00			
11.6	Providing & fixing Semicircular/half round Poly Vinyl Chloride (PVC) roof gutter of 180mm Dia 3.04m long, including fittings (brackets, bolts, nuts, washer, end cap, tee end cap etc.) excluding the cost of pipes	m	42.30			

SN	Description	Unit	Qty	Rate in Nu.		Total Amount (Nu.)
				Figure	Words	
12	**Flooring Work**					
12.1	Providing and laying Vitrified Tiles (600*600*10mm) in floorings laid on a bed of 12mm thick cement mortar of 1:3 finished with flush pointing in white cement.	sq.m	52.04			
12.2	Providing and laying Vitrified Tiles in skirtings on a bed of 12mm thick cement mortar of 1:3 finished with flush pointing in white cement -150mm height.	sq.m	3.26			
12.3	Providing and laying Anti-Skid Tiles (600*600*10mm) in floors on a bed of 12mm thick cement mortar of 1:3 finished with flush pointing in white cement.	sq.m	17.34			
12.4	Providing and laying Ceramic Tiles (300*300*10mm) in walls on a bed of 12mm thick cement mortar of 1:3 finished with flush pointing in white cement.	sq.m	11.92			
13	**Finishing Work**					
13.1	Providing and laying cement plaster in CM 1:4, 15 mm thick (Inside wall).	sq.m	149.14			
13.2	Providing & applying putty of thickness 2mm or more over plastered surface to prepare the surface even and smooth complete.	sq.m	254.27			
13.3	Providing and applying finishing coats Acrylic washable distemper, two coats on new work, including cement primer coat for internal walls and room ceiling.	sq.m	149.14			
13.4	Providing and applying finishing coats Synthetic enamel paint for steel & woodwork, two coats on new work, including applying one coat of primers for external ceiling and internal portion for window & door.	sq.m	32.48			
14	**Plumbing Works**					
14.1	Providing and fixing 3-layer PP-R (Polypropylene Random Copolymer) PN-16 pipes, SDR 7.4 UV Stabilized and anti-microbial fusion welded, having thermal stability for hot and cold-water supply					

SN	Description	Unit	Qty	Rate in Nu.		Total Amount (Nu.)
				Figure	Words	
	including all PP-R plain and brass Threaded Polypropylene random fittings including fixing pipe with clamps at 1.0m spacing. This includes testing of joints, cutting chases and making good the wall complete as per direction of Engineer-in- Charge. -20mm	m	40.00			
14.2	Providing & fixing c.p. towel rail 750 x 20mm with c.p brass brackets fixed to wooden cleats.	each	1			
14.3	Providing & fixing soap dish. -Recessed, ceramic, 200x100mm.	each	1			
14.4	Providing & fixing 600x450mm bevelled edge mirror (superior glass) incl.4mm A.C sheet base fixed to wooden cleats.	each	1			
14.5	Providing & fixing 450x120mm glass shelf, including c.p brass brackets fixed to wooden cleats.	each	1			
14.6	Providing & fixing c.p toilet paper holder.	each	1			
14.7	Providing & fixing European-type vitreous China w.c One piece Toilet with seat cover, repairing walls complete.	each	1			
14.8	Providing & fixing white vitreous China wash basin, including C.I brackets, 15mm C.P. brass pillar taps, c.p. chain & rubber plug, 32mm pvc waste, 32mm dia. trap & union, repair walls Flat back wash basin 630x450mm with a pair of 15mm c.p. brass pillar taps.	each	1			
14.9	Providing & fixing Electric water heater including necessary fittings. -50 litres	each	1			
14.10	Providing & fixing Electric water heater including necessary fittings. -10 litres.	each	1			
14.11	Providing & fixing Kitchen Sinks including all connections and fittings. -Stainless steel, 1740*520*200mm, double bowl & single drain-board.	each	1			
14.12	Providing & fixing c.p. brass mixers, 15mm. -For wall, non-telephonic type.	each	1			
14.13	Providing & fixing c.p. brass mixers, 15mm. -For sink, with casted spout swinging.	each	1			

SN	Description	Unit	Qty	Rate in Nu.		Total Amount (Nu.)
				Figure	Words	
14.14	Providing & fixing 25mm brass stop cock.	each	7			
14.15	Providing & fixing c.p. brass bibcock- 15mm, long body, c.p. knob.	each	1			
15	**Sewerage Works**					
15.1	Hand excavation and refilling in layers < 200mm, of trenches for pipes & sockets, cables, including dressing of sides/ ramming of bottom, depth upto 1.5m, disposal of surplus material within lead of 50m: All kinds of soil-Pipes, cables etc. 80mm < dia < 300mm.	m	35.00			
15.2	Providing & fixing P.V.C soil waste and vent pipes, single or double socketed, including pipe clip complete (excluding the cost of PVC fittings)-75mm.	m	5.20			
15.3	Providing & fixing P.V.C soil waste and vent pipes, single or double socketed, including pipe clip complete (excluding the cost of PVC fittings)-110mm.	m	3.00			
15.4	Providing & fixing P.V.C plain bend. -75mm dia.	each	3.00			
15.5	Providing & fixing P.V.C Single Tee with door. -110mm dia.	each	1			
15.6	Providing & fixing P.V.C Nahanni Trap. -110mm inlet & 75mm outlet.	each	1			
15.7	Providing & laying H.D.P.E Pipes, 4 PN, including H.D.P.E fittings (excluding trenching, refilling & thrust block). -110mm.	m	35.00			
16	**External Works**					
16.1	Providing and laying 50mm thick Plinth Protection and grouted with fine sand mix including well rammed, finishing the top smooth. -With cement concrete 1:3:6, 20mm aggregates, laid over 75mm thick layer of compacted gravel (40mm).	sq.m	61.46			
16.2	Constructing second class brick masonry open surface drain in cement mortar 1:4 including earth work in excavation 100 mm thick concrete bed 1:5:10, 40mm aggregate and 25mm thick cement concrete					

SN	Description	Unit	Qty	Rate in Nu.		Total Amount (Nu.)
				Figure	Words	
	1:2:4,12 mm aggregate for filling haunches including 12mm cement plastering 1:4 with a floating coat of neat cement and disposal of surplus earth etc. complete-150mm wide x 200mm average depth.	m	43.90			
16.3	Constructing Brick masonry manhole/ inspection chamber in cement mortar 1:4, R.C.C top slab with 1:2:4 20mm aggregates, foundation concrete 1:4:8 40mm aggregates, 12mm plaster in CM 1:3 finished, inside dimension 800 x 900mm & 450mm deep & additional depth as per site requirement including C.I. cover & frame (weight >38 kg).	each	5.00			
	Sub Total (Caretakers Quarter)					

3. Administrative Block with Classroom

SN	Description	Unit	Qty	Rate in Nu.		Total Amount (Nu.)
				Figure	Words	
1	**Earthwork**					
1.1	Excavation in foundation trenches or drains, not exceeding 1.5 m in width or 10 sq.m on plan, including setting out, dressing of sides, ramming and leveling of bottoms, and disposal of surplus excavated material within 50 m lead and 1.5 m lift, in all kinds of soil and rock, with or without blasting, complete.	cu.m	110.79			
1.2	Filling of trenches, sides of foundations, areas to be raised etc. including compaction in layers < 200mm using selected excavated earth within lead 50m & lift 1.5m.	cu.m	145.36			
1.3	Providing and laying dry earth bedding, including consolidating each deposited layer by watering, ramming and dressing.	cu.m	18.34			
2	**Damp Proof Course**					
2.1	Providing & laying 75mm thick sand bedding, including watering, ramming and dressing.	cu.m	10.09			

SN	Description	Unit	Qty	Rate in Nu.		Total Amount (Nu.)
				Figure	Words	
2.2	Providing and laying moisture barrier using plastic sheeting underlay -200 micrometer.	sq.m	122.27			
3	**Stonework**					
3.1	Providing and laying dry hand packed stone soling /coarse aggregate filling with hard stone.	cu.m	38.78			
3.2	Providing and laying Random Rubble Masonry with hard stone in CM 1:4 in foundation and upto plinth level.	cu.m	33.82			
4	**Concrete Work**					
4.1	Providing and laying in position plain cement concrete -1:3:6 (1 cement: 3 sand: 6 graded crushed rock 20 mm nominal size) excluding the cost of centering and shuttering - All work upto plinth level.	cu.m	32.89			
4.2	Providing and laying in position plain cement concrete - 1:2:4 (1 cement: 2 sand: 4 graded crushed rock 20 mm nominal size) excluding the cost of centering and shuttering - All work upto plinth level.	cu.m	15.07			
5	**RCC Work**					
5.1	Providing & laying in position reinforced cement concrete 1:1.5:3 (1 cement: 1.5 sand: 3 graded crushed rock 20 mm nominal size) excluding the cost of centering, shuttering and reinforcement - all work upto plinth level.	cu.m	43.21			
5.2	Providing & laying in position reinforced cement concrete 1:1.5:3 (1 cement: 1.5 sand: 3 graded crushed rock 20 mm nominal size) in columns, Pillars, posts above plinth up to roof excluding the cost of centering, shuttering and reinforcement.	cu.m	13.38			
5.3	Providing & laying in position reinforced cement concrete 1:1.5:3 (1 cement: 1.5 sand: 3 graded crushed rock 20 mm nominal size) in beams, lintels, slabs, staircase above plinth up to roof excluding the cost of centering, shuttering and reinforcement.	cu.m	66.87			
6	**Steel Reinforcement**					

SN	Description	Unit	Qty	Rate in Nu.		Total Amount (Nu.)
				Figure	Words	
6.1	Providing & fixing Thermo-Mechanically Treated reinforcement bar (Yield Strength 500 MPa) for R.C.C work including cutting, bending, binding and placing in position complete.	kg	18,202.03			
7	**Form Work**					
7.1	Providing & fixing centering and shuttering (formwork) using Timber, including strutting, propping etc. and removal of formwork-Foundation, Footings and all works upto Plinth Level, etc.	sq.m	147.53			
7.2	Providing & fixing centering and shuttering (formwork) using Shuttering Plywood, including Timber frame and timber strutting, propping with complete form tie system etc., and removal of formwork- Columns, Pillars, Post, Struts, etc.	sq.m	124.42			
7.3	Providing & fixing centering and shuttering (formwork) using Shuttering Plywood, including Timber frame and timber strutting, propping with complete form tie system etc., and removal of formwork- Lintels, Beams, Griders, Bresummers, Cantilevers etc.	sq.m	270.48			
7.4	Providing & fixing centering and shuttering (formwork) using Shuttering Plywood, including Timber frame and timber strutting, propping with complete form tie system etc., and removal of formwork- Slab, Suspended floor, roof and landing.	sq.m	279.00			
8	**Coursed Rubble Masonry/ Cement Concrete Block**					
8.1	Providing &laying Coursed Rubble Masonry with hard stone hammer-dressed in foundation & plinth (In cement mortar 1:4) including superstructure above plinth level upto floor three level (including all lifts and heights) - 400mm Thick.	cu.m	118.96			
8.2	Providing & laying concrete block brick in Foundation & Plinth including superstructure above plinth level upto floor three level (including all lifts and heights) - 250mm Thick.	cu.m	20.67			

SN	Description	Unit	Qty	Rate in Nu.		Total Amount (Nu.)
				Figure	Words	
8.3	Providing & laying locally manufactured Concrete Solid Block Masonry in superstructure below floor 2 level - 115mm Thick.	sq.m	85.03			
9	**Door and Window**					
9.1	Providing & fixing in position dressed wood work in frame for window including aluminum framed windows in position with all accessories, including sliding shutters glazed with 5 mm thick plain glass, pelmet and curtain rod, and all required fittings, fixtures, and holdfasts, complete as per drawings and specifications. Rate includes traditional RCC cornices, synthetic enamel painting on internal woodwork, and traditional painting on internal and external surfaces, complete as directed by the Engineer-in-Charge.					
9.1.1	W155	each	4			
9.1.2	W210	each	14			
9.1.3	V96	each	4			
9.1.4	R335-W195 (excluding Rabsey)	each	2			
9.1.5	R530 - Opening Area (excluding Rabsey)	each	1			
9.2	Providing & fixing in position dressed woodwork in frame for door including flush door shutter (prefabricated), block-board with ply vaneer 35mm thick treated with anti-termite polishes with all fittings & fixtures & hold fasts as per drawing complete. Rate includes traditional RCC cornices, synthetic enamel painting on internal woodwork, and traditional painting on internal and external surfaces, complete as directed by the Engineer-in-Charge.					
9.2.1	D100	each	3			
9.2.2	ED120	each	2			
9.2.3	ID100	each	2			
9.2.4	D80	each	3			
9.2.5	D90	each	2			
10	**Steel work**					

SN	Description	Unit	Qty	Rate in Nu.		Total Amount (Nu.)
				Figure	Words	
10.1	Steel work welded, in built up sections, trusses, frame-works including cutting, hoisting, fixing and appl. priming coat of red lead paint- In Tubular sections.	kg	3,428.86			
10.2	Steel work welded, in built up sections, trusses, frame-works including cutting, hoisting, fixing and appl. priming coat of red lead paint-In Tees, angles, flats and channels.	kg	229.57			
10.3	Providing and fixing MS round hold-down bolts with nuts and washer plates, complete in all areas.	kg	168.68			
10.4	Providing & fixing bolts of various sizes including nuts & washers.	kg	29.76			
10.5	Providing, making and fixing, M.S Gusset Plate, straps, flats, sole plates etc., complete in roof truss work.	kg	527.08			
10.6	Providing and fixing Stainless Steel railing of Grade 304, made from hollow stainless-steel sections of minimum 1.5 mm thickness, comprising 50.8 mm dia handrail, 42.4 mm dia vertical posts, and 16 mm dia intermediate members, including all required hollow tubes, channels, plates, brackets, base plates, and supports. The item includes cutting, bending, welding, grinding, buffing, polishing (hairline/mirror finish as approved), forming of curvature wherever required, and fixing the railing on top of floor or on the side of waist slab, complete with all necessary stainless steel nuts, bolts, dash fasteners, anchor fasteners, screws, and other accessories, as per approved drawings, specifications, and directions of the Engineer-in-Charge, complete in all respects.	m	8.40			
11	**Roof Work**					
11.1	Providing & fixing Pre - Painted Galvanised Iron (PPGI) sheets, including bolts, hooks and nuts 8mm dia. with bitumen and G.I limpet washers filled with white lead for connection, excluding the cost of purlins, rafter and trusses (24g, 0.50mm).	sq.m	317.81			

SN	Description	Unit	Qty	Rate in Nu.		Total Amount (Nu.)
				Figure	Words	
11.2	Providing & fixing 600mm ridges or hips in Pre-Painted Steel sheets, including bolts, hooks and nuts 8mm dia G.I limpet and bitumen washers for connection. -25g	m	52.87			
11.3	Providing and fixing to frames with 8 mm thick Cement Fiber Board in ceiling or sofit excluding ceiling frames as per manufacturer's specifications (sample to be approved by client)	sq.m	111.57			
11.4	Providing & fixing Eaves board (225x25mm) with molding fitted and fixed with necessary screws	m	69.08			
11.5	Providing and fixing on wall face single socketed rigid PVC (Working Pressure 4kgf per sq.cm) rainwater pipes including jointing with seal ring leaving 10 mm gap for thermal expansion- complete. -90mmdia.	m	74.22			
11.6	Providing & fixing Semicircular/half round Poly Vinyl Chloride (PVC) roof gutter of 180mm dia 3.04m long, including fittings (brackets, bolts, nuts, washer, end cap, tee end cap etc.) excluding the cost of pipes	m	72.53			
12	**Traditional Cornices**					
12.1	Bhutan type Traditional Cornices and in R.C.C 1:1.5:3, 20 mm aggregate including cost of formwork including finishing with 6mm thick plaster on the exposed surface with cement mortar 1:3, including reinforcement & Traditional painting -ding (washable) decorative painting cost as per standard design for Zhu and Kachen.	m	9.44			
12.2	Providing, making & fixing woodwork dressed in traditional cornices complete as per standard design in Class 'B' (conifer), including applying wood preservative on unexposed surfaces, excluding decorative painting (Measurement to be taken along the cornice and wall junction line) - At all other floor levels + Phana, for RW335 and RW530.	m	15.20			

SN	Description	Unit	Qty	Rate in Nu.		Total Amount (Nu.)
				Figure	Words	
12.3	Bhutan type Traditional Cornices in R.C.C 1:1.5:3, 20 mm aggregate including cost of formwork including finishing with 6mm thick plaster on the exposed surface with cement mortar 1:3, excluding reinforcement & decorative painting cost as per standard design (Measurement to be taken along the cornice and wall junction)- Multi-Storied building.. at all floor 1 levels including Lhanglag / Tshechu-khanim excluding the cost of phana.	m	12.20			
12.4	Providing, preparing and applying Sumdang washable painting -Ding for RW335 and RW530.	sq.m	17.19			
13	**Flooring Work**					
13.1	Providing & laying 40mm thick marble chips flooring (mosaic flooring) top layer 6mm thick with white, black or black and white marble chips of nominal size 1.5-3mm in proportion 1:2 (cement: chips), on 34mm thick concrete base in cement concrete 1:2:4, 12.5mm aggregate (cement and marble powder mix shall be of the ratio 3 part of cement to 1 part of marble powder) - In White Cement.	sq.m	272.2			
13.2	Providing & fixing Terrazzo or Marble chips skirting < 300mm top layer 6mm thick with white or black, black and white marble chips size 4mm in proportion 1:2, laid on 12.5mm thick cement plaster 1:3 base (for mosaic flooring).	sq.m	22.17			
13.3	Providing and laying Anti-Skid Tiles (600*600*10mm) in floors on a bed of 12mm thick cement mortar of 1:3 finished with flush pointing in white cement.	sq.m	22.05			
13.4	Providing and laying Ceramic Tiles (300*300*10mm) in walls on a bed of 12mm thick cement mortar of 1:3 finished with flush pointing in white cement.	sq.m	59.01			
14	**Plastering and Finishing Works**					
14.1	Providing and laying cement plaster in CM 1:4, 15 mm thick (Inside wall).	sq.m	421.49			

SN	Description	Unit	Qty	Rate in Nu.		Total Amount (Nu.)
				Figure	Words	
14.2	Providing and laying 6mm thick cement plaster in C.M 1:4 in ceiling.	sq.m	251.68			
14.3	Providing & laying 20mm cement plaster in cement mortar 1:4 in Staircase.	sq.m	14.58			
14.4	Providing & applying putty of thickness 2mm or more over plastered surface to prepare the surface even and smooth complete.	sq.m	687.75			
14.5	Providing and applying finishing coats Acrylic washable distemper, two coats on new work, including cement primer coat for internal walls and room ceiling.	sq.m	687.75			
14.6	Providing and applying finishing coats synthetic enamel paint - 2 coats on new work including applying primer for external ceiling and internal portion for window & door.	sq.m	142.66			
15	**External Works**					
15.1	Providing & laying 50mm thick Plinth Protection and grouted with fine sand mix including well rammed, finishing the top smooth - With cement concrete 1:3:6, 20mm aggregates, laid over 75mm thick layer of compacted gravel.	sq.m	95.71			
15.2	Constructing second class brick masonry open surface drain in cement mortar 1:4 including earth work in excavation 100 mm thick concrete bed 1:5:10, 40mm aggregate and 25mm thick cement concrete 1:2:4,12 mm aggregate for filling haunches including 12mm cement plastering 1:4 with a floating coat of neat cement and disposal of surplus earth etc. complete-150mm wide x 200mm average depth.	m	56.30			

SN	Description	Unit	Qty	Rate in Nu.		Total Amount (Nu.)
				Figure	Words	
15.3	Constructing Brick masonry manhole/ inspection chamber in cement mortar 1:4, R.C.C top slab with 1:2:4 20mm aggregates, foundation concrete 1:4:8 40mm aggregates, 12mm plaster in CM 1:3 finished, inside dimension 800 x 900mm & 450mm deep & additional depth as per site requirement including C.I. cover & frame (weight >38 kg).	each	5			
16	**Plumbing Works**					
16.1	Providing and fixing 3-layer PP-R (Polypropylene Random Copolymer) PN 16 pipes, SDR 7.4 UV Stabilized and anti-microbial fusion welded, having thermal stability for hot and cold-water supply including all PP-R plain and brass Threaded Polypropylene random fittings excluding trenching, refilling but including testing of joints complete as per direction of Engineer-in- Charge. - 32mm.	m	40.00			
16.2	Providing and fixing 3-layer PP-R (Polypropylene Random Copolymer) PN 16 pipes, SDR 7.4 UV Stabilized and anti-microbial fusion welded, having thermal stability for hot and cold-water supply including all PP-R plain and brass Threaded Polypropylene random fittings excluding trenching, refilling but including testing of joints complete as per direction of Engineer-in- Charge. - 25mm.	m	15.28			
16.3	Providing and fixing 3-layer PP-R (Polypropylene Random Copolymer) PN-16 pipes, SDR 7.4 UV Stabilized and anti-microbial fusion welded, having thermal stability for hot and cold-water supply including all PP-R plain and brass Threaded Polypropylene random fittings including fixing pipe with clamps at 1.0m spacing. This includes testing of joints, cutting chases and making good the wall complete as per direction of Engineer-in- Charge. - 20mm.	m	20.48			

SN	Description	Unit	Qty	Rate in Nu.		Total Amount (Nu.)
				Figure	Words	
16.4	Providing & fixing white vitreous china wash basin, including C.I brackets, 15mm C.P. brass pillar taps, c.p. chain & rubber plug, 32mm pvc waste, 32mm dia. trap & union, repair walls- Flat back wash basin 630x450mm with single 15mm c.p. brass pillar taps.	each	3			
16.5	Providing & fixing European-type vitreous china w.c One piece Toilet with seat cover, repairing walls complete.	each	3			
16.6	Providing & fixing white vitreous china flat back, lipped front urinal basin 430x260x350mm, including all fittings, painting, and repairing walls complete-one bowl.	each	2			
16.7	Providing & fixing 600x450mm bevelled edge mirror (superior glass) incl.4mm A.C sheet base fixed to wooden cleats.	each	3			
16.8	Providing & Fixing soap dish- including all necessary fixtures and fittings. (including brackets, wooden cleats, c.p. brass screws).	each	2			
16.9	Providing & Fixing toilet paper holder with necessary fittings. (C.P. brass).	each	3			
16.10	Providing & fixing 32mm brass full way valve with wheel.	each	2			
16.11	Providing & fixing c.p. brass stop cock -15mm, angle, c.p knob.	each	3			
16.12	Providing and fixing c.p. brass bibcock - 15mm standard vertical, c.p. knob.	each	3			
16.13	Providing & fixing plastic tank including all accessories complete, 2000 ltr.	each	2			
17	**Sewerage Works**					
17.1	Hand excavation and refilling in layers < 200mm, of trenches for pipes & sockets, cables, including dressing of sides/ ramming of bottom, depth upto 1.5m, disposal of surplus material within 50m: All kinds of soil.	m	79.09			

SN	Description	Unit	Qty	Rate in Nu.		Total Amount (Nu.)
				Figure	Words	
17.2	Providing & laying H.D.P.E Pipes, 4 PN, including H.D.P.E fittings (excluding trenching, refilling & thrust block), 110mm.	m	64.50			
17.3	Providing & laying H.D.P.E Pipes, 4 PN, including H.D.P.E fittings (excluding trenching, refilling & thrust block), 90mm.	m	4.98			
17.4	Providing & fixing P.V.C soil waste and vent pipes, single or double socketed, including pipe clip complete (excluding the cost of PVC fittings) - 75mm dia.	m	9.62			
17.5	Providing & fixing P.V.C soil waste and vent pipes, single or double socketed, including pipe clip complete (excluding the cost of PVC fittings) - 110mm dia.	m	4.98			
17.6	Providing & fixing P.V.C plain bend-110mm.	each	1			
17.7	Providing & fixing P.V.C plain bend- 75mm.	each	3			
17.8	Providing & fixing P.V.C Nahanni Trap - 110mm inlet & 75mm outlet.	each	3			
17.9	Providing & fixing P.V.C Single Tee with door - 110mm dia.	each	1			
	Sub Total (Adm. Block with Classroom)					

4. Library And Laboratory

SN	Description	Unit	Qty	Rate in Nu.		Total Amount (Nu.)
				Figure	Words	
1	**Earthwork**					
1.1	Excavation in foundation trenches or drains, not exceeding 1.5 m in width or 10 sq.m on plan, including setting out, dressing of sides, ramming and leveling of bottoms, and disposal of surplus excavated material within 50 m lead and 1.5 m lift, in all kinds of soil and rock, with or without blasting, complete.	cu.m	118.38			

SN	Description	Unit	Qty	Rate in Nu.			Total Amount (Nu.)
				Figure	Words		
1.2	Filling of trenches, sides of foundations, areas to be raised etc. including compaction in layers < 200mm using selected excavated earth within lead 50m &lift 1.5m.	cu.m	172.18				
1.3	Providing and laying dry earth bedding, including consolidating each deposited layer by watering, ramming and dressing.	cu.m	13.98				
2	**Damp Proof Course**						
2.1	Providing & laying 75mm thick sand bedding, including watering, ramming and dressing.	cu.m	12.20				
2.2	Providing and laying moisture barrier using plastic sheeting underlay -200 micro meter.	sq.m	95.41				
3	**Stonework**						
3.1	Providing and laying dry hand packed stone soling/coarse aggregate filling with hard stone.	cu.m	38.39				
3.2	Providing and laying Random Rubble Masonry with hard stone in CM 1:4 in foundation and upto plinth level.	cu.m	47.94				
4	**Concrete Work**						
4.1	Providing and laying in position plain cement concrete -1:3:6 (1 cement: 3 sand: 6 graded crushed rock 20 mm nominal size) excluding the cost of centering and shuttering - All work upto plinth level.	cu.m	27.90				
4.2	Providing and laying in position plain cement concrete - 1:2:4 (1 cement: 2 sand: 4 graded crushed rock 20 mm nominal size) excluding the cost of centering and shuttering - All work upto plinth level.	cu.m	10.88				
5	**RCC Work**						
5.1	Providing & laying in position reinforced cement concrete 1:1.5:3 (1 cement: 1.5 sand: 3 graded crushed rock 20 mm nominal size) excluding the cost of centering, shuttering and reinforcement - all work upto plinth level..	cu.m	43.59				

SN	Description	Unit	Qty	Rate in Nu.			Total Amount (Nu.)
				Figure	Words		
5.2	Providing & laying in position reinforced cement concrete 1:1.5:3 (1 cement: 1.5 sand: 3 graded crushed rock 20 mm nominal size) in columns, Pillars, posts above plinth up to roof excluding the cost of centering, shuttering and reinforcement.	cu.m	13.25				
5.3	Providing & laying in position reinforced cement concrete 1:1.5:3 (1 cement: 1.5 sand: 3 graded crushed rock 20 mm nominal size) in beams, lintels, slabs, staircase above plinth up to roof excluding the cost of centering, shuttering and reinforcement.	cu.m	53.79				
6	**Steel Reinforcement**						
6.1	Providing & fixing Thermo-Mechanically Treated reinforcement bar (Yield Strength 500 MPa) for R.C.C work including cutting, bending, binding and placing in position complete.	kg	22,366.21				
7	**Form Work**						
7.1	Providing & fixing centering and shuttering (formwork) using Timber, including strutting, propping etc. and removal of formwork-Foundation, Footings and all works upto Plinth Level, etc.	sq.m	150.98				
7.2	Providing & fixing centering and shuttering (formwork) using Shuttering Plywood, including Timber frame and timber strutting, propping with complete form tie system etc., and removal of formwork- Columns, Pillars, Post, Struts, etc.	sq.m	164.95				
7.3	Providing & fixing centering and shuttering (formwork) using Shuttering Plywood, including Timber frame and timber strutting, propping with complete form tie system etc., and removal of formwork- Lintels, Beams, Griders, Bresummers, Cantilevers etc.	sq.m	108.26				

SN	Description	Unit	Qty	Rate in Nu.			Total Amount (Nu.)
				Figure	Words		
7.4	Providing & fixing centering and shuttering (formwork) using Shuttering Plywood, including Timber frame and timber strutting, propping with complete form tie system etc., and removal of formwork- Slab, Suspended floor, roof and landing.	sq.m	123.08				
8	**Coursed Rubble Masonry/ Cement Concrete Block**						
8.1	Providing &laying Coursed Rubble Masonry with hard stone hammer-dressed in foundation & plinth (In cement mortar 1:4) including superstructure above plinth level upto floor three level (including all lifts and heights) - 400mm Thick.	cu.m	88.38				
8.2	Providing & laying concrete block brick in Foundation & Plinth including superstructure above plinth level upto floor three level (including all lifts and heights) - 250mm Thick.	cu.m	4.05				
8.3	Providing & laying locally manufactured Concrete Solid Block Masonry in superstructure below floor 2 level - 115mm Thick.	cu.m	28.93				
9	**Traditional Cornices Work**						
9.1	Providing & fixing in position with timber in mixed conifer with aluminum windows including Shutter 5mm thick plain glass, Pelmet & curtain rod, fittings & fixtures & hold fasts as per drawing complete - synthetic enamel paint on new work of steel. (Inclusive of traditional wooden cornices and painting works) for W213.	each	21.00				
9.2	Providing & fixing in position dressed wood work in frame for door including flush door shutter (pre-fabricated), block-board with ply vaneer 35mm thick treated with anti-termite polishes with all fittings & fixtures & hold fasts as per drawing complete. Rate includes traditional RCC cornices, synthetic enamel painting on internal woodwork, and traditional painting on internal and external surfaces, complete as directed by the Engineer-in-Charge.						

SN	Description	Unit	Qty	Rate in Nu.			Total Amount (Nu.)
				Figure	Words		
9.2.1	D135	each	2				
9.2.2	D100	each	3				
9.3	Providing and fixing in position timber railings including fittings and fixtures complete (Inclusive of 'ding' traditional sumdang paint).	each	1				
9.4	Bhutan type Traditional Cornices and in R.C.C 1:1.5:3, 20 mm aggregate including cost of formwork including finishing with 6mm thick plaster on the exposed surface with cement mortar 1:3, reinforcement & decorative painting cost as per standard design for both traditional cornices (inclusive of zhu) and kachen.	m	18.28				
9.5	Bhutan type Traditional Cornices in R.C.C 1:1.5:3, 20 mm aggregate including cost of formwork including finishing with 6mm thick plaster on the exposed surface with cement mortar 1:3, excluding reinforcement & decorative painting cost as per standard design (Measurement to be taken along the cornice and wall junction)- Multi-Storied building.. at all floors 1 levels including Lhanglag / Tshechu-khanim (excluding the cost of phana).	m	6.05				
9.6	Providing & fixing wooden Kachen, zhu and traditional cornices and timber joists including wood preservatives, all types of painting etc. with complete necessary fitting and accessories - mix conifer - for Entrance Porch (First Floor).	m	7.56				
9.7	Providing, preparing and applying Sumdang washable painting -Ding for Kachen, Zhu and traditional cornices for Rabsey.	sq.m	15.43				
10	**Steel work**						
10.1	Steel work welded, in built up sections, trusses, frame-works including cutting, hoisting, fixing and appl. priming coat of red- In tubular sections.	kg	2,680.75				

SN	Description	Unit	Qty	Rate in Nu.			Total Amount (Nu.)
				Figure	Words		
10.2	Steel work welded, in built up sections, trusses, frame-works including cutting, hoisting, fixing and appl. priming coat of red lead paint-In Tees, angles, flats and channels.	kg	224.3				
10.3	Providing and fixing MS round hold-down bolts with nuts and washer plates, complete in all areas.	kg	94.70				
10.4	Providing & fixing bolts of various sizes including nuts & washers.	kg	19.72				
10.5	Providing, making and fixing, M.S Gusset Plate, straps, flats, sole plates etc., complete in roof truss work.	kg	347.79				
11	**Roof Work**						
11.1	Providing & fixing Pre - Painted Galvanised Iron (PPGI) sheets, including bolts, hooks and nuts 8mm dia. with bitumen and G.I limpet washers filled with white lead for connection, excluding the cost of purlins, rafter and trusses (24g, 0.50mm).	sq.m	221.75				
11.2	Providing & fixing 600mm ridges or hips in Pre-Painted Steel sheets, including bolts, hooks and nuts 8mm dia G.I limpet and bitumen washers for connection (25g).	m	38.40				
11.3	Providing and fixing to frames 8 mm thick Cement Fibre Board in ceiling or sofit excluding ceiling frames as per manufacturer's specifications (sample to be approved by client).	sq.m	93.88				
11.4	Providing & fixing Eaves board (225x25mm) with moulding fitted and fixed with necessary screws.	m	66.7				
11.5	Providing and fixing on wall face single socketed rigid PVC (Working Pressure 4kgf per sq.cm) rainwater pipes including jointing with seal ring leaving 10 mm gap for thermal expansion- complete -90mm dia.	m	14.10				
11.6	Providing & fixing 180mm over all semi-circular plain G.I gutter, including brackets, bolts, nuts, washers & rainwater pipes connections, excluding the cost of pipes.	m	66.70				

SN	Description	Unit	Qty	Rate in Nu.		Total Amount (Nu.)
				Figure	Words	
12	**Flooring Work**					
12.1	Providing & laying 40mm thick marble chips flooring top layer 6mm thick with white, black or black and white marble chips of nominal size 1.5-3mm in proportion 1:2 (cement: chips), on 34mm thick concrete base in cement concrete 1:2:4, 12.5mm aggregate (cement and marble powder mix shall be of the ratio 3 part of cement to 1 part of marble powder) +Extra for colored chips instead of black, white or black and white chips in top 6mm layer of marble chips flooring	sq.m	96.81			
12.2	Providing & fixing Terrazzo or Marble chips skirting < 300mm height top layer 6mm thick with white or black, black and white marble chips size 4mm in proportion 1:2, laid on 12.5mm thick cement plaster 1:3 base (for mosaic and marble flooring)	sq.m	10.71			
12.3	Providing and laying Vitrified Tiles (600*600*10mm) in floorings laid on a bed of 12mm thick cement mortar of 1:3 finished with flush pointing in white cement.	sq.m	96.92			
12.4	Providing and laying Vitrified Tiles in skirtings on a bed of 12mm thick cement mortar of 1:3 finished with flush pointing in white cement -150mm height.	sq.m	9.14			
12.5	Providing & laying marble stone flooring over 20mm thick base of cement mortar 1:4, jointed with grey cement slurry mixed with pigment where necessary, rubbing & polishing complete, 20mm thick colored marble	sq.m	31.25			
13	**Finishing Work**					
13.1	Providing and laying cement plaster in CM 1:4, 15 mm thick (Inside wall).	sq.m	312.62			
13.2	Providing and laying 6mm thick cement plaster in C.M 1:4 in ceiling.	sq.m	248.32			
13.3	Providing & laying 20mm cement plaster in cement mortar 1:4 in Staircase.	sq.m	15.88			

SN	Description	Unit	Qty	Rate in Nu.			Total Amount (Nu.)
				Figure	Words		
13.4	Providing & applying putty of thickness 2mm or more over plastered surface to prepare the surface even and smooth complete.	sq.m	560.93				
13.5	Providing and applying finishing coats Acrylic washable distemper, two coats on new work, including cement primer coat for internal walls and room ceiling.	sq.m	560.93				
13.6	Providing and applying finishing coats synthetic enamel paint - 2 coats on new work including applying primer for external ceiling and internal portion for window & door.	sq.m	123.92				
14	**External Works**						
14.1	Providing and laying 50mm thick Plinth Protection and grouted with fine sand mix including well rammed, finishing the top smooth. -With cement concrete 1:3:6, 20mm aggregates, laid over 75mm thick layer of compacted gravel (40mm).	sq.m	90.40				
14.2	Constructing second class brick masonry open surface drain in cement mortar 1:4 including earth work in excavation 100 mm thick concrete bed 1:5:10, 40mm aggregate and 25mm thick cement concrete 1:2:4,12 mm aggregate for filling haunches including 12mm cement plastering 1:4 with a floating coat of neat cement and disposal of surplus earth etc. complete-150mm wide x 200mm average depth.	m	45.20				
	Sub Total (Laboratory and Library Block)						

5. Classroom 2 Blocks

SN	Description	Unit	Qty	Rate in Nu.		Total Amount (Nu.)
				Figure	Words	
1	**Earthwork**					
1.1	Excavation in foundation trenches or drains, not exceeding 1.5 m in width or 10 sq.m on plan, including setting out, dressing of sides, ramming and leveling of bottoms, and disposal of surplus excavated material within 50 m lead and 1.5 m lift, in all kinds of soil and rock, with or without blasting, complete.	cu.m	1,539.82			
1.2	Filling of trenches, sides of foundations, areas to be raised etc. including compaction in layers < 200mm using selected excavated earth within lead 50m &lift 1.5m.	cu.m	1,134.34			
1.3	Providing and laying dry earth bedding, including consolidating each deposited layer by watering, ramming and dressing.	cu.m	63.16			
2	**Damp Proof Course**					
2.1	Providing & laying 75mm thick sand bedding, including watering, ramming and dressing.	cu.m	31.58			
2.2	Providing and laying moisture barrier using plastic sheeting underlay -200 micro meter.	sq.m	334.50			
3	**Stonework**					
3.1	Providing and laying dry hand packed stone soling/coarse aggregate filling with hard stone.	cu.m	316.10			
3.2	Providing and laying Random Rubble Masonry with hard stone in CM 1:4 in foundation and upto plinth level.	cu.m	453.18			
4	**Concrete Work**					
4.1	Providing and laying plain cement concrete excluding the cost of centering and shuttering - All work upto plinth level -1:3:6 (1 cement: 3 sand: 6 graded crushed rock 20 mm nominal size)	cu.m	57.00			
4.2	Providing and laying in position plain cement concrete - 1:2:4 (1 cement: 2 sand: 4 graded crushed rock 20 mm nominal size) excluding the cost of centering and shuttering - All work upto plinth level.	cu.m	31.68			

SN	Description	Unit	Qty	Rate in Nu.		Total Amount (Nu.)
				Figure	Words	
5	**RCC Work**					
5.1	Providing & laying in position reinforced cement concrete 1:1.5:3 (1 cement: 1.5 sand: 3 graded crushed rock 20 mm nominal size) excluding the cost of centering, shuttering and reinforcement - all work upto plinth level.	cu.m	165.46			
5.2	Providing & laying in position reinforced cement concrete work in - 1:1.5:3 (1 cement: 1.5 sand: 3 graded crushed rock 20mm nominal size) in walls (any thickness) including attached pilasters buttresses, piers, abutments etc. upto floor five level excluding the cost of centering, shuttering and reinforcement.	cu.m	7.88			
5.3	Providing & laying in position reinforced cement concrete 1:1.5:3 (1 cement: 1.5 sand: 3 graded crushed rock 20 mm nominal size) in columns, Pillars, posts above plinth up to roof excluding the cost of centering, shuttering and reinforcement.	cu.m	56.50			
5.4	Providing & laying in position reinforced cement concrete 1:1.5:3 (1 cement: 1.5 sand: 3 graded crushed rock 20 mm nominal size) in beams, lintels, slabs, staircase above plinth up to roof excluding the cost of centering, shuttering and reinforcement.	cu.m	177.64			
6	**Steel Reinforcement**					
6.1	Providing & fixing Thermo-Mechanically Treated reinforcement bar (Yield Strength 500 MPa) for R.C.C work including cutting, bending, binding and placing in position complete.	kg	75,213.58			
7	**Form Work**					
7.1	Providing & fixing centering and shuttering (formwork) using Timber, including strutting, propping etc. and removal of formwork-Foundation, Footings and all works upto Plinth Level, etc.	sq.m	568.56			

SN	Description	Unit	Qty	Rate in Nu.		Total Amount (Nu.)
				Figure	Words	
7.2	Providing & fixing centering and shuttering (formwork) using Shuttering Plywood, including Timber frame and timber strutting, propping with complete form tie system etc., and removal of formwork- Columns, Pillars, Post, Struts, etc.	sq.m	1,096.50			
7.3	Providing & fixing centering and shuttering (formwork) using Shuttering Plywood, including Timber frame and timber strutting, propping with complete form tie system etc., and removal of formwork- Lintels, Beams, Griders, Bresummers, Cantilevers etc.	sq.m	1247.78			
7.4	Providing & fixing centering and shuttering (formwork) using Shuttering Plywood, including Timber frame and timber strutting, propping with complete form tie system etc., and removal of formwork- Slab, Suspended floor, roof and landing.	sq.m	607.56			
7.5	Providing & fixing centering and shuttering (formwork) using Shuttering Plywood, including Timber frame and steel strutting, propping with complete form tie system etc. and removal of formwork- Walls (any thickness), pilasters, buttresses, string course etc.	sq.m	126.00			
8	**Coursed Rubble Masonry/ Cement Concrete Block**					
8.1	Providing &laying Coursed Rubble Masonry with hard stone hammer-dressed in foundation & plinth (In cement mortar 1:4) including superstructure above plinth level upto floor three level (including all lifts and heights) - 400mm Thick.	cu.m	215.40			
8.2	Providing & laying concrete block brick in Foundation & Plinth including superstructure above plinth level upto floor three level (including all lifts and heights) - 250mm Thick.	cu.m	28.36			
9	**Traditional Cornices Work**					

SN	Description	Unit	Qty	Rate in Nu.		Total Amount (Nu.)
				Figure	Words	
9.1	Providing & fixing in position with timber in mixed conifer with aluminium windows including Shutter 6mm thick plain glass, Pelmet & curtain rod, fittings & fixtures & hold fasts as per drawing complete - synthetic enamel paint on new work of steel - W210.	each	36			
9.2	Providing & fixing in position doors in timber of mixed conifer including, timber shutter with all fittings & fixtures & hold fasts as per drawing complete with timber as the frame - D135.	each	12			
9.3	Providing & fixing in MS railing Top & bottom (40 x25x2mm) and Post section (25 x 25x2.5mm) with complete traditional sumdang painting (ding) with Tshegay.	m	105.70			
9.4	Bhutan type Traditional Cornices in R.C.C 1:1.5:3, 20 mm aggregate including cost of formwork including finishing with 6mm thick plaster on the exposed surface with cement mortar 1:3, including reinforcement & decorative painting cost as per standard design - at all middle floor levels -kachen & Zhu.	m	131.60			
9.5	Bhutan type Traditional Cornices in R.C.C 1:1.5:3, 20 mm aggregate including cost of formwork including finishing with 6mm thick plaster on the exposed surface with cement mortar 1:3, excluding reinforcement & decorative painting cost as per standard design (Measurement to be taken along the cornice and wall junction)- Multi-Storied building. at all floor 1 levels including Lhanglag / Tshechu-khanim (excluding the cost of phana).	m	61.60			

SN	Description	Unit	Qty	Rate in Nu.		Total Amount (Nu.)
				Figure	Words	
9.6	Providing, making & fixing woodwork dressed in traditional cornices complete as per standard design in Class 'B' (conifer), including applying wood preservative on unexposed surfaces, excluding decorative painting (Measurement to be taken along the cornice and wall junction line)-At all other floor levels (excluding phana) + Phana.	m	56.40			
9..7	Providing & fixing in position dressed wood work in frames of doors, windows, clerestory windows and other frames, wrought and framed	Cu.m	1.00			
9.8	Providing, preparing and applying Sumdang washable painting-ding.	sq.m	161.12			
10	**Steel work**					
10.1	Steel work welded, in built up sections, trusses, frame-works including cutting, hoisting, fixing and appl. priming coat of red lead paint- In tubular sections.	kg	14,192.08			
10.2	Steel work welded, in built up sections, trusses, frame-works including cutting, hoisting, fixing and appl. priming coat of red lead paint-In Tees, angles, flats and channels.	kg	714.52			
10.3	Providing and fixing MS round hold-down bolts with nuts and washer plates, complete in all areas.	kg	1,129.86			
10.4	Providing & fixing bolts of various sizes including nuts & washers.	kg	114.58			
10.5	Providing, making and fixing, M.S Gusset Plate, straps, flats, sole plates etc., complete in roof truss work.	kg	1,198.72			
11	**Roof Work**					
11.1	Providing & fixing 600mm ridges or hips in Pre-Painted Steel sheets, including bolts, hooks and nuts 8mm dia G.I limpet and bitumen washers for connection. 25g	m	55.54			

SN	Description	Unit	Qty	Rate in Nu.		Total Amount (Nu.)
				Figure	Words	
11.2	Providing and fixing to frames 8 mm thick Cement Fibre Board in ceiling or sofit excluding ceiling frames as per manufacturer's specifications (sample to be approved by client).	sq.m	518.20			
11.3	Providing & fixing Eaves board (225x25mm) with moulding fitted and fixed with necessary screws.	m	194.48			
11.4	Providing and fixing on wall face single socketed rigid PVC (Working Pressure 4kgf per sq.cm) rain water pipes including jointing with seal ring leaving 10 mm gap for thermal expansion- complete -90mm dia.	m	60.00			
11.5	Providing & fixing 180mm over all semi-circular plain G.I gutter, including brackets, bolts, nuts, washers & rainwater pipes connections, excluding the cost of pipes.	m	108.86			
12	**Flooring Work**					
12.1	Providing & laying 40mm thick marble chips flooring top layer 6mm thick with white, black or black and white marble chips of nominal size 1.5-3mm in proportion 1:2 (cement: chips), on 34mm thick concrete base in cement concrete 1:2:4, 12.5mm aggregate (cement and marble powder mix shall be of the ratio 3 part of cement to 1 part of marble powder).	sq.m	814.48			
12.2	Providing & fixing Terrazzo or Marble chips skirting < 300mm height top layer 6mm thick with white or black, black and white marble chips size 4mm in proportion 1:2, laid on 12.5mm thick cement plaster 1:3 base.	sq.m	44.70			
12.3	Providing & laying marble stone flooring over 20mm thick base of cement mortar 1:4, jointed with grey cement slurry mixed with pigment where necessary, rubbing & polishing complete in staircase- 20mm thick black and white marble.	sq.m	38.06			
13	**Finishing Work**					
13.1	Providing and laying cement plaster in CM 1:4, 15 mm thick (Inside wall).	sq.m	1,699.60			

SN	Description	Unit	Qty	Rate in Nu.		Total Amount (Nu.)
				Figure	Words	
13.2	Providing and laying 6mm thick cement plaster in C.M 1:4 in ceiling.	sq.m	680.46			
13.3	Providing & laying 20mm cement plaster in cement mortar 1:4 in Staircase.	sq.m	41.58			
13.4	Providing & applying putty of thickness 2mm or more over plastered surface to prepare the surface even and smooth complete.	sq.m	4,760.12			
13.5	Providing and applying finishing coats Acrylic washable distemper, two coats on new work, including cement primer coat (Inside wall and ceiling).	sq.m	2,380.06			
13.6	Providing and applying finishing coats Synthetic enamel paint for steel & woodwork, two coats on new work, including applying one coat of primers.	sq.m	369.60			
14	**External Works**					
14.1	Providing and laying 50mm thick Plinth Protection and grouted with fine sand mix including well rammed, finishing the top smooth. -With cement concrete 1:3:6, 20mm aggregates, laid over 75mm thick layer of compacted gravel (40mm).	sq.m	267.42			
14.2	Constructing second class brick masonry open surface drain in cement mortar 1:4 including earth work in excavation 100 mm thick concrete bed 1:5:10, 40mm aggregate and 25mm thick cement concrete 1:2:4,12 mm aggregate for filling haunches including 12mm cement plastering 1:4 with a floating coat of neat cement and disposal of surplus earth etc. complete-150mm wide x 200mm average depth.	m	177.30			
	Sub Total (Classroom-2 blocks)					

6. Multipurpose Hall

SN	Description	Unit	Qty	Rate in Nu.		Total Amount (Nu.)
				Figure	Words	
1	**Earthwork**					
1.1	Excavation in foundation trenches or drains, not exceeding 1.5 m in width or 10 sq.m on plan, including setting out, dressing of sides, ramming and leveling of bottoms, and disposal of surplus excavated material within 50 m lead and 1.5 m lift, in all kinds of soil and rock, with or without blasting, complete.	cu.m	243.44			
1.2	Filling of trenches, sides of foundations, areas to be raised etc. including compaction in layers < 200mm using selected excavated earth within lead 50m &lift 1.5m.	cu.m	128.81			
1.3	Providing and laying dry earth bedding, including consolidating each deposited layer by watering, ramming and dressing.	cu.m	180.15			
2	**Damp Proof Course**					
2.1	Providing & laying 75mm thick sand bedding, including watering, ramming and dressing.	cu.m	450.38			
2.2	Applying a coat of hot bitumen (maxphalt) 80\100 or equivalent using 1.7 kg per sq.m including the surface cleaning.	sq.m	82.38			
2.2	Providing and laying moisture barrier using plastic sheeting underlay -200 micro meter.	sq.m	403.98			
3	**Stonework**					
3.1	Providing and laying Hand packed stone filling or soling with stones	cu.m	113.03			
3.2	Providing and laying Random Rubble Masonry with hard stone in CM 1:4 in foundation and upto plinth level.	cu.m	139.47			
4	**Concrete Work**					

SN	Description	Unit	Qty	Rate in Nu.		Total Amount (Nu.)
				Figure	Words	
4.1	Providing and laying in position plain cement concrete excluding the cost of centering and shuttering - All work upto plinth level - -1:3:6 (1 cement: 3 sand: 6 graded crushed rock 20 mm nominal size)	cu.m	9.73			
4.2	Providing and laying in position plain cement concrete - 1:2:4 (1 cement: 2 sand: 4 graded crushed rock 20 mm nominal size) excluding the cost of centering and shuttering - All work upto plinth level	cu.m	69.03			
5	**RCC Work**					
5.1	Providing & laying in position reinforced cement concrete 1:1.5:3 (1 cement: 1.5 sand: 3 graded crushed rock 20 mm nominal size) excluding the cost of centering, shuttering and reinforcement - all work upto plinth level.	cu.m	31.25			
5.2	Providing & laying in position reinforced cement concrete 1:1.5:3 (1 cement: 1.5 sand: 3 graded crushed rock 20 mm nominal size) in columns, Pillars, posts above plinth up to roof excluding the cost of centering, shuttering and reinforcement.	cu.m	12.91			
5.3	Providing & laying in position reinforced cement concrete 1:1.5:3 (1 cement: 1.5 sand: 3 graded crushed rock 20 mm nominal size) in beams, lintels, slabs, staircase above plinth up to roof excluding the cost of centering, shuttering and reinforcement.	cu.m	45.22			
5.4	Providing & laying in position reinforced cement concrete work 1:1:2 (1 cement: 1 sand: 2 graded crushed rock 20 mm nominal size) in suspended floor, roofs having slope upto 15 Degree, landings, balconies, shelves and chajjas upto floor five level excluding the cost of centering, shuttering and reinforcement. including expanded metal mesh.	cu.m	9.40			
6	**Steel Reinforcement**					

SN	Description	Unit	Qty	Rate in Nu.		Total Amount (Nu.)
				Figure	Words	
6.1	Providing & fixing Thermo-Mechanically Treated reinforcement bar (Yield Strength 500 MPa) for R.C.C work including cutting, bending, binding and placing in position complete.	kg	10,206.52			
7	**Form Work**					
7.1	Providing & fixing centering and shuttering (formwork), including strutting, propping etc. and removal of formwork - Foundation and plinth etc.	sq.m	133.65			
7.2	Providing & fixing centering and shuttering (formwork) using Shuttering Plywood, including Timber frame and timber strutting, propping with complete form tie system etc. and removal of formwork - Columns, pillars, post, struts, etc.	sq.m	236.46			
7.3	Providing & fixing centering and shuttering (formwork) using Shuttering Plywood, including Timber frame and timber strutting, propping with complete form tie system etc. and removal of formwork - Lintels, beams, griders, bresummers, cantilevers etc.	sq.m	422.00			
7.4	Providing & fixing centering and shuttering (formwork) using Shuttering Plywood, including Timber frame and timber strutting, propping with complete form tie system etc. and removal of formwork - Suspended floor, roof, landing, shelves and their supports, balconies, chajjas, etc.	sq.m	5.77			
8	**Coursed Rubble Masonry/ Cement Concrete Block**					
8.1	Providing & laying Coursed Rubble Masonry with hard stone hammer-dressed in foundation & plinth (In cement mortar 1:4) including superstructure above plinth level upto floor three level (including all lifts and heights) - 400mm Thick.	cu.m	68.52			
8.2	Providing & laying concrete block brick in Foundation & Plinth including superstructure above plinth level upto floor three level (including all lifts and heights) - 250mm Thick.	cu.m	51.71			

SN	Description	Unit	Qty	Rate in Nu.		Total Amount (Nu.)
				Figure	Words	
8.3	Providing & laying locally manufactured Concrete Solid Block Masonry in superstructure below floor 2 level - 115mm Thick.	sq.m	52.38			
9	**Door and Window**					
9.1	Providing & fixing in position with timber in mixed conifer with aluminium windows including Shutter 5mm thick plain glass, Pelmet & curtain rod, fittings & fixtures & hold fasts as per drawing complete - synthetic enamel paint on new work of steel. (Inclusive of traditional wooden cornices and painting works)					
9.1.1	W1	each	4			
9.1.2	W2	each	10			
9.1.3	V1	each	8			
9.1.4	V2	each	8			
9.1.5	V3	each	2			
9.1.6	Rabsey Window	each	1			
9.2	Providing & fixing in position doors in timber of mixed conifer including, timber shutter with all fittings & fixtures & hold fasts as per drawing (complete) with timber as the frame. (Inclusive of traditional cornices and all types of paintings)					
9.2.1	D1	each	1			
9.2.2	D2	each	4			
9.2.3	D3	each	1			
9.2.4	D4	each	1			
9.2.5	D5	each	2			
9.2.6	D6	each	3			

SN	Description	Unit	Qty	Rate in Nu.		Total Amount (Nu.)
				Figure	Words	
9.3	Bhutan-type traditional cornices in R.C.C. (1:1.5:3, 20 mm aggregate), including formwork, and finishing with 6 mm thick cement plaster (1:3) on the exposed surface, excluding reinforcement and decorative painting, as per standard design. Measurement to be taken along the cornice-wall junction for multi-storied buildings at all first-floor levels, including Lhanglag/Tshechu-khanim, but excluding the cost of phana.	m	7.90			
9.4	Bhutan-type traditional cornices in R.C.C. (1:1.5:3, 20 mm aggregate), including formwork, reinforcement, and finishing with 6 mm thick cement plaster (1:3) on exposed surfaces, complete with decorative painting, as per standard design and in accordance with drawings and specifications - in Zhu and Kachen.	m	18.32			
9.5	Providing, preparing and applying Sumdang washable painting-ding	sq.m	7.96			
9.6	Providing, making & fixing woodwork dressed in traditional cornices complete as per standard design in Class 'B' (conifer), including applying wood preservative on unexposed surfaces, excluding decorative painting (Measurement to be taken along the cornice and wall junction line)-At all other floor levels + Phana.	m	6.46			
9.7	Providing and fixing 12 Nos. aluminium louvre frames fixed to timber frame for Jamthok wall, including all necessary accessories such as clips for fixing glass blades, weather strips or seals, handles, holdfasts, and finishing. Complete with 4 mm thick frosted glass blades (6 nos. per frame) with smoothly rounded edges for ventilators, and applying finishing paint on woodwork as per approved sample or client's approval, complete as per drawings and specifications.	set	1			

SN	Description	Unit	Qty	Rate in Nu.		Total Amount (Nu.)
				Figure	Words	
9.8	Providing & fixing 125x100mm wood plastic composite (WPC) frame with Cement Bonded Particle Board (pre-laminated both sides for wall/ceiling) lining with necessary nails/screws with 4mm plain glass for Jamthok wall.	set	1			
10	**Steel work**					
10.1	Steel work welded, in built up sections, trusses, frame-works including cutting, hoisting, fixing and appl. priming coat of red lead paint - In Tubular sections.	kg	11,179.40			
10.2	Steel work welded, in built up sections, trusses, frame-works including cutting, hoisting, fixing and appl. priming coat of red lead paint - In R.S. joists & channel Section.	kg	15,782.41			
10.3	Providing & fixing M.S. round hold-down bolts with nuts and washer plates.	kg	1,043.07			
10.4	Providing, making and fixing M.S. straps, flats, sole plates etc.	kg	3,576.08			
10.5	Providing, making and fixing, M.S Gusset Plate, straps, flats, sole plates etc., complete in roof truss work.	kg	1,774.78			
10.6	Providing and fixing square/rectangular hollow steel sections of size 30 × 30 × 2.6 mm for external ceiling grid and internal wall paneling grid, including cutting, hoisting, welding, and fixing in position with screws, complete, along with 6 mm dia fully threaded GI hanger rods, wall paneling supports, and all necessary fittings, as per drawings and directions of the Engineer-in-Charge.	m	3,242.02			

SN	Description	Unit	Qty	Rate in Nu.		Total Amount (Nu.)
				Figure	Words	
10.7	Providing and fixing Stainless Steel railing of Grade 304, made from hollow stainless-steel sections of minimum 1.5 mm thickness, comprising 50.8 mm dia handrail, 42.4 mm dia vertical posts, and 16 mm dia intermediate members, including all required hollow tubes, channels, plates, brackets, base plates, and supports. The item includes cutting, bending, welding, grinding, buffing, polishing (hairline/mirror finish as approved), forming of curvature wherever required, and fixing the railing on top of floor or on the side of waist slab, complete with all necessary stainless steel nuts, bolts, dash fasteners, anchor fasteners, screws, and other accessories, as per approved drawings, specifications, and directions of the Engineer-in-Charge, complete in all respects.	m	48.77			
11	**Roof Work**					
11.1	Providing & fixing Pre - Painted Galvanised Iron (PPGI) sheets, including bolts, hooks and nuts 8mm dia. with bitumen and G.I limpet washers filled with white lead for connection, excluding the cost of purlins, rafter and trusses (24g, 0.50mm).	sq.m	722.86			
11.2	Providing & fixing 600mm ridges or hips in Pre-Painted Steel sheets, including bolts, hooks and nuts 8mm dia G.I limpet and bitumen washers for connection. 25g	m	71.18			
11.3	Providing and fixing to frames 8 mm thick Cement Fibre Board in ceiling or sofit excluding ceiling frames as per manufacturer's specifications (sample to be approved by client).	sq.m	460.65			
11.4	Providing & fixing Eaves board (225x25mm) with moulding fitted and fixed with necessary screws.	m	189.00			
11.5	Providing and fixing on wall face single socketed rigid PVC (Working Pressure 4kgf per sq.cm) rain water pipes including jointing with seal ring leaving 10 mm gap for thermal expansion- complete - 110mm.	m	47.70			

SN	Description	Unit	Qty	Rate in Nu.		Total Amount (Nu.)
				Figure	Words	
11.6	Providing & fixing Semicircular/half round Poly Vinyl Chloride (PVC) roof gutter of 180mm dia 3.04m long, including fittings (brackets, bolts, nuts, washer, end cap, tee end cap etc.) excluding the cost of pipes	m	72.49			
11.7	Providing & fixing P.V.C plain bend - 110mm dia.	each	18.00			
11.8	Providing and fixing designer fiber cement board ceiling tiles of size 595 × 595 mm, of approved texture, design, and pattern, laid in position on a galvanized steel interlocking grid system comprising 24 × 38 mm T-sections and 24 × 24 mm wall angles, including all necessary accessories such as 6 mm dia fully threaded hanger rods, anchor fasteners, stainless steel screws, and all other fittings, complete.	sq.m	536.55			
12	**Woodwork**					
12.1	Providing and fixing in position dressed wooden flooring using 30 mm thick planks made of mixed conifer timber, including cutting, dressing, fixing with nails/screws, proper alignment, and finishing, complete as per drawings and directions of the Engineer-in-Charge, in Mezzanine, Stage, Catwalk, and Dhingri Langna.	cu.m	7.01			
12.2	Providing and fixing in position wooden joists made of mixed conifer timber, including cutting to required sizes, hoisting and placing in position at all levels, applying approved wood preservative on all unexposed surfaces, fixing with necessary fasteners, and all incidental works, complete as per drawings and directions of the Engineer-in-Charge, in Mezzanine, Stage, and Catwalk areas.	cu.m	1.55			
12.3	Providing and fixing 25 mm thick wooden skirting in mixed conifer timber, fixed with necessary nails or screws, complete, in Mezzanine, Stage, and Catwalk areas.	sq.m	17.32			
13	**Flooring Work**					

SN	Description	Unit	Qty	Rate in Nu.		Total Amount (Nu.)
				Figure	Words	
13.1	Providing and laying CP grating in floor traps-100mm dia (vent holes in timber flooring).	each	26			
13.2	Providing & laying 40mm thick marble chips flooring top layer 10mm thick with white, black or black and white marble chips of size 6mm in proportion 1:2 (cement: chips), on 30mm cement concrete 1:2:4 base, 12.5mm aggregate - In grey cement.	sq.m	449.45			
13.3	Providing & fixing Terrazzo or Marble chips skirting < 300mm height top layer 6mm thick with white or black, black and white marble chips size 4mm in proportion 1:2, laid on 12.5mm thick cement plaster 1:3 base - In grey cement.	sq.m	39.54			
13.4	Providing and laying anti-skid tiles of size 300x300mm in floors on a bed of 12mm thick cement mortar of 1:3 finished with flush pointing in white cement.	sq.m	25.78			
13.5	P/L 40mm thk. marble chips flooring top layer 10mm thk. with white, black or B&W marble chips of size 6mm in proportion 1:2 (cement: chips), on 30mm cement conc. 1:2:4 base, 12.5mm agg.on staircase treads, width<300mm incl. forming nosing -In grey cement.	sq.m	14.39			
13.6	Extra, for Providing & fixing glass strips in joints of terrazzo floors.	m	832.19			
14	**Finishing Work**					
14.1	Providing & fixing Pre-Fabricated Flooring Profiles in Class 'B' (conifer) including necessary screws etc. complete - 25mm thick	sq.m	124.94			
14.2	Providing & laying granite flooring over 20mm thick base of cement mortar 1:4, jointed with grey cement slurry mixed with pigment where necessary, rubbing & polishing complete - 20mm thick colored marble	sq.m	2.83			
14.3	Providing and laying Ceramic Tiles (300*300*10mm) in walls on a bed of 12mm thick cement mortar of 1:3 finished with flush pointing in white cement.	sq.m	35.14			

SN	Description	Unit	Qty	Rate in Nu.		Total Amount (Nu.)
				Figure	Words	
14.4	Providing and laying cement plaster in CM 1:4, 15 mm thick (Inside wall).	sq.m	304.90			
14.5	Providing & laying 20mm cement plaster - C.M 1:4	sq.m	37.45			
14.6	Cement Lime Plaster- 12 mm cement lime plaster of mix on fair side of brick work - 1:1:6 (1 cement :1 lime: 6 sand) finished even and smooth and curing etc. complete.	sq.m	641.43			
14.7	Providing & applying one coat of primers - Cement primer.	sq.m	342.35			
14.8	Providing and applying finishing coats Acrylic washable distemper, two coats on new work, including cement primer coat (Inside wall and ceiling).	sq.m	1,014.80			
14.9	Providing and applying finishing coats - Vinyl plastic emulsion paint, for cement, masonry, plaster, two coats on new work (for external wall).	sq.m	342.35			
14.10	Providing and applying wood stains, varnishes & polishes - Synthetic varnish (clera) - two coats, including coat of wood filler on new work.	sq.m	17.32			
14.11	Providing and applying finishing coats - Synthetic enamel, for steel and wood works, two coats on new work	sq.m	198.68			
14.12	Providing and fixing to frames (wall or ceiling) Gypsum plaster board 12mm thick including finishing of joints smooth complete (excluding cost of frame)	sq.m	335.51			
14.13	Providing & fixing ceiling hatch in MPH, Dining Hall & Kitchen as per drawing complete.	each	1			
15	**Plumbing Works**					

SN	Description	Unit	Qty	Rate in Nu.		Total Amount (Nu.)
				Figure	Words	
15.1	Providing and fixing 3-layer PP-R (Polypropylene Random Copolymer) PN 16 pipes, SDR 7.4 UV Stabilized and anti-microbial fusion welded, having thermal stability for hot and cold-water supply including all PP-R plain and brass Threaded Polypropylene random fittings excluding trenching, refilling but including testing of joints complete as per direction of Engineer-in- Charge. - 25mm	m	100.00			
15.2	Providing and fixing 3-layer PP-R (Polypropylene Random Copolymer) PN-16 pipes, SDR 7.4 UV Stabilized and anti-microbial fusion welded, having thermal stability for hot and cold water supply including all PP-R plain and brass Threaded Polypropylene random fittings including fixing pipe with clamps at 1.0m spacing. This includes testing of joints, cutting chases and making good the wall complete as per direction of Engineer-in- Charge. - 20mm.	m	50.00			
15.3	Providing & fixing Indian-type vitreous china w.c squatting pan with 10 litres vitreous china cistern including 100 mm P or S trap, fittings and repairing walls complete - 580mm, white Orissa-model.	each	2			
15.4	Providing & fixing European-type vitreous china w.c One piece Toilet with seat cover, repairing walls complete.	each	1			
15.5	P/F white vitreous china flatback, lipped front urinal basin 430x260x350mm incl. white vitreous china low level cistern, fittings, brackets, G.I. flush pipe & spreaders, brass unions, G.I. clamps, painting, repair walls - One bowl-5 litres.	each	1			
15.6	Providing & fixing white vitreous china wash basin, including C.I brackets, 15mm C.P. brass pillar taps, c.p. chain & rubber plug, 32mm p.v.c. waste, 32mm dia. trap & union, repair walls - Flat back wash basin 630x450mm with single 15mm c.p. brass pillar tap.	each	3			

SN	Description	Unit	Qty	Rate in Nu.		Total Amount (Nu.)
				Figure	Words	
15.7	Providing & fixing Kitchen Sinks including all connections and fittings - Stainless steel, 580 x 480 x 175 mm, single bowl.	each	1			
15.8	Providing & fixing Electric water heater including necessary fittings - 15 litres	each	1			
15.9	Providing & fixing c.p. brass stop cock - 15mm, standard, c.p knob.	each	6			
15.10	Providing & fixing c.p. brass pillar-cock - 15mm, standard, c.p knob.	each	4			
15.11	Providing & fixing c.p. brass bibcock - 15mm, standard vertical, c.p knob.	each	3			
15.12	Providing & fixing c.p. brass mixers, 15mm - For sink, with swivel spout.	each	1			
15.13	Providing & fixing 600x450mm bevelled edge mirror (superior glass) incl.4mm A.C sheet base fixed to wooden cleats.	each	5			
15.14	Providing & fixing c.p. towel rail 750 x 20mm with c.p brass brackets fixed to wooden cleats.	each	3			
15.15	Providing & fixing toilet paper holder - C.P. brass.	each	3			
15.16	Providing & fixing soap dish - including brackets, wooden cleats, c.p. brass screws.	each	3			
15.17	Providing & fixing plastic tank including all accessories complete - 2000 litre capacity with 3 Nos of Brass bib cock including fittings etc. (rainwater harvest).	each	2			
16	**Sewerage Works**					
16.1	Providing & fixing P.V.C soil waste and vent pipes, single or double socketed, including pipe clip complete (excluding the cost of PVC fittings) - 75mm dia.	m	75.00			
16.2	Providing & fixing P.V.C soil waste and vent pipes, single or double socketed, including pipe clip complete (excluding the cost of PVC fittings) - 110mm dia.	m	120.00			
16.3	Providing &. fixing P.V.C plain bend - 75mm dia	each	5.00			

SN	Description	Unit	Qty	Rate in Nu.		Total Amount (Nu.)
				Figure	Words	
16.4	Providing & fixing P.V.C plain bend - 110mm dia.	each	5.00			
16.5	Providing & fixing P.V.C door bend - 75mm dia.	each	5.00			
16.6	Providing & fixing P.V.C door bend - 110mm dia.	each	5.00			
16.7	Providing & fixing P.V.C Nahani Trap - 110mm inlet & 75mm outlet.	each	6.00			
16.8	Providing and laying CP grating in floor traps-100mm dia.	each	6.00			
17	**External Works**					
17.1	Providing and laying 50mm thick Plinth Protection and grouted with fine sand mix including well rammed, finishing the top smooth. -With cement concrete 1:3:6, 20mm aggregates, laid over 75mm thick layer of compacted gravel (40mm).	sq.m	126.25			
17.2	Constructing second class brick masonry open surface drain in cement mortar 1:4 including earth work in excavation 100 mm thick concrete bed 1:5:10, 40mm aggregate and 25mm thick cement concrete 1:2:4,12 mm aggregate for filling haunches including 12mm cement plastering 1:4 with a floating coat of neat cement and disposal of surplus earth etc. complete-150mm wide x 200mm average depth.	m	109.27			
17.3	Constructing Brick masonry manhole in cement mortar 1:5, R.C.C top slab with 1:2:4 20mm aggregates, foundation concrete 1:4:8 40mm aggregates, 12mm plaster in CM 1:3 finished with floating coat of neat cement and making channels in cement concrete 1:2:4 20mm aggregates, neatly finished complete , Inside dimension 900 x 800mm & 600mm deep including C.I. cover & frame (weight >38 kg) Interception Pit.	each	1.00			
	Sub Total (MPH)					

7. Toilet for Boys and Girls

SN	Description	Unit	Qty	Rate in Nu.		Total Amount (Nu.)
				Figure	Words	
1	**Earthwork**					
1.1	Excavation in foundation trenches or drains not exceeding 1.5 m in width or area 10 sq.m on plan, including dressing & ramming, disposal of surplus soil within 50m lead & 1.5 m lift: All types of soil	cu.m	176.62			
1.2	Filling of trenches, sides of foundations etc. in layers < 200mm using selected excavated earth, ramming etc. within lead 50 m & lift 1.5m	cu.m	99.31			
2	**Damp Proof Course**					
2.1	Providing and laying sand bedding, including watering, ramming and dressing.	cu.m	20.75			
3	**Stonework**					
3.1	Providing and laying Hand packed stone filling or soling with stones	cu.m	23.89			
3.2	Providing and laying Random Rubble Masonry with hard stone in foundation & plinth: In cement mortar 1:5	cu.m	65.22			
4	**Concrete Work**					
4.1	Providing and laying in position 1:3:6 (1 cement: 3 sand: 6 graded crushed rock 20 mm nominal size) plain cement concrete excluding the cost of centering and shuttering: All work upto plinth level	cu.m	24.06			
5	**RCC Work**					
5.1	Providing and laying in position reinforced cement concrete 1:1.5:3 (1 cement: 1.5 sand: 3 graded crushed rock 20 mm nominal size) excluding the cost of centering, shuttering and reinforcement: All work upto plinth level	cu.m	17.48			
5.2	Providing and laying in position reinforced cement concrete work 1:1.5:3 (1 cement: 1.5 sand: 3 graded crushed rock 20 mm nominal size) in plinth and skirting courses, fillets, columns, pillars, posts and struts upto floor five level excluding the cost of centering, shuttering and reinforcement.	cu.m	6.37			

SN	Description	Unit	Qty	Rate in Nu.		Total Amount (Nu.)
				Figure	Words	
5.3	Providing and laying in position reinforced cement concrete work 1:1.5:3 (1 cement: 1.5 sand: 3 graded crushed rock 20 mm nominal size) in suspended floor, roofs having slope upto 15 degree, landings, balconies, shelves and chajjas upto floor five level excluding the cost of centering, shuttering and reinforcement	cu.m	8.83			
5.4	Providing and laying in position reinforced cement concrete work 1:1.5:3 (1 cement: 1.5 sand: 3 graded crushed rock 20 mm nominal size) in beams, lintels, bands, plain windowsills, staircases, spiral staircases upto floor five level excluding the cost of centering, shuttering and reinforcement24.30	cu.m	24.30			
6	**Steel Reinforcement**					
6.1	Providing & fixing Thermo-Mechanically Treated reinforcement bar (Yield Strength 500 MPa) for R.C.C work including cutting, bending, binding and placing in position complete.	kg	9,313.41			
7	**Form Work**					
7.1	Providing & fixing centering and shuttering (formwork) using Timber, including strutting, propping etc. and removal of formwork- Foundation, Footings and all works upto Plinth Level, etc.	sq.m	58.96			
7.2	Providing & fixing centering and shuttering (formwork) using Shuttering Plywood, including Timber frame and timber strutting, propping with complete form tie system etc., and removal of formwork- Lintels, Beams, Griders, Bresummers, Cantilevers etc.	sq.m	209.16			
7.3	Providing & fixing centering and shuttering (formwork) using Shuttering Plywood, including Timber frame and timber strutting, propping with complete form tie system etc., and removal of formwork- Columns, Pillars, Post, Struts, etc.	sq.m	82.56			

SN	Description	Unit	Qty	Rate in Nu.		Total Amount (Nu.)
				Figure	Words	
7.4	Providing & fixing centering and shuttering (formwork) using Shuttering Plywood, including Timber frame and timber strutting, propping with complete form tie system etc., and removal of formwork- Slab, Suspended floor, roof and landing.	sq.m	64.66			
8	**Cement Concrete Block Work**					
8.1	Providing and laying concrete solid brick work in cement mortar 1:4 in superstructure above plinth level, upto floor two level including concrete encasement for vertical reinforcement bars.	cu.m	97.77			
8.2	Providing & laying locally manufactured Concrete Solid Block Masonry (115mm) in superstructure below floor 2 level in cement mortar 1:4.	sq.m	49.40			
8.3	Providing and laying Hand packed filling with brick bats.	cu.m	3.65			
9	**Door and Window Work**					
9.1	Providing and fixing 18 mm thick High Pressure Laminate (HPL) partition wall without door including associated frames, top rails and hardware fittings complete as per drawing and manufacturer's specifications (only area of board to be measured)	sq.m	65.64			
9.2	Providing and fixing 18 mm thick High-Pressure Laminate (HPL) partition wall with door including associated frames, top rails and hardware fittings complete as per drawing and manufacturer's specifications (only area of board to be measured)	sq.m	28.86			
9.3	Providing & fixing 125x100mm wood plastic composite (WPC) door frame -brown color and factory finish	m	63.60			
9.4	Providing & fixing 30mm Thick WPC (Wood Plastic Composite) molded door shutter complete including hinges - Standard	sq.m	21.60			

SN	Description	Unit	Qty	Rate in Nu.		Total Amount (Nu.)
				Figure	Words	
9.5	Providing and fixing Aluminium louvre frame including all accessories such as clips for fixing glass blades, weather strips or weather seals, handles etc. complete with 4mm thick frosted glass blades (6 no's) having edges smoothly rounded off for ventilators including holdfast and applying finishing paint on wood work (sample as shown in drawing or as per client's approval)	each	26.00			
10	**Steel work**					
10.1	Steel work welded, in built up sections, trusses, frame works including cutting, hoisting, fixing and applying priming coat of red lead paint: In tubular (circular, square & rectangular) sections.	kg	4,237.37			
10.2	Steel work in single section including cutting, hoisting, fixing and applying priming coat of red lead paint: In Flats	kg	169.72			
10.3	Providing and fixing U-shaped TMT Anchor Bars of various sizes	kg	109.96			
10.4	Providing, making and fixing M.S. straps, flats, sole plates etc.	kg	731.82			
11	**Roof Work**					
11.1	Providing & fixing Pre - Painted Galvanised Iron (PPGI) sheets, including bolts, hooks and nuts 8mm dia. with bitumen and G.I limpet washers filled with white lead for connection, excluding the cost of purlins, rafter and trusses (25g, 0.50mm)	sq.m	187.06			
11.2	Providing and fixing 600mm ridges or hips in Pre-Painted Galvanised Iron (PPGI) sheets, including bolts, hooks and nuts 8mm dia G.I limpet and bitumen washers for connection: 25g	m	38.20			
11.3	Providing and fixing to frames 8 mm thick PVC panels in ceiling or sofit including ceiling frames as per manufacturer's specifications (sample to be approved by client)	sq.m	313.98			

SN	Description	Unit	Qty	Rate in Nu.		Total Amount (Nu.)
				Figure	Words	
12	**Wood Work**					
12.1	Providing and fixing in position dressed wood work in frames of doors, windows, clerestory windows and other frames, wrought and framed: Class 'B' (conifer)	cu.m	0.44			
12.2	Providing and fixing 125mm long Mild Steel hinges with necessary screws etc. complete	each	48.00			
12.3	Providing and fixing steel grills in window frames with M.S. flats including necessary screws and painting with synthetic enamel paint over red oxide primer.	kg	95.04			
12.4	Providing & fixing expanded metal 20x60mm strands 3.25x1.6mm including 60x20mm beading of Class 'B' (conifer)	sq.m	16.00			
13	**Flooring Work**					
13.1	Providing & laying Kota stone flooring over 20mm thick base of cement mortar 1:4, jointed with grey cement slurry mixed with pigment where necessary, rubbing & polishing complete-20mm	sq.m	27.60			
13.2	Providing and laying non-skid tiles in flooring, treads of steps and landings laid on 20mm thick cement mortar1:4 (1cement :4 coarse sand) finished with flush pointing in white cement: min. 8mm thick and size, colour/shade as per client's choice.	sq.m	147.51			
13.3	Providing and laying Anti-skid tiles in walls and floors on a bed of 12mm thick cement mortar of 1:3 finished with flush pointing in white cement.	sq.m	179.39			
14	**Finishing Work**					
14.1	Providing and laying 6mm cement plaster (ceilings) in cement mortar 1:4	sq.m	118.56			
14.2	Providing and laying 15mm cement plaster (internal wall) on rough side of single or half-brick wall in cement mortar 1:4	sq.m	99.68			
14.3	Providing and laying 20mm cement plaster (external wall) in cement mortar 1:4	sq.m	341.83			

SN	Description	Unit	Qty	Rate in Nu.		Total Amount (Nu.)
				Figure	Words	
14.4	Providing and laying 20mm cement plaster in cement mortar 1:5	sq.m	2.74			
14.5	Providing & laying cement plaster, finished with floating coat of neat cement: 15mm plaster in C.M 1:3	sq.m	64.32			
14.6	Providing and applying putty of thickness 2mm or more over plastered surface to prepare the surface even and smooth complete.	sq.m	199.36			
14.7	Providing and applying one coat of primers: Cement primer	sq.m	683.65			
14.8	Providing and applying one coat of primers: Woodwork - white primer	sq.m	17.12			
14.9	Providing and applying finishing coats: Plastic emulsion interior grade paint, two coats on new work (colour/shade as per client's choice)	sq.m	199.36			
14.10	Providing and applying finishing coats: Synthetic enamel, for steel & wood work, two coats on new work (colour/shade as per client's choice)	sq.m	145.52			
14.11	Providing and applying finishing coats: Plastic emulsion exterior paint for external walls, two coats on new work (colour/shade as per client's choice)	sq.m	683.65			
15	**Plumbing Works**					
15.1	Providing and fixing PP-R pipes PN 16, including fittings & clamps complete: 20mm dia	m	100.80			
15.2	Providing and fixing PP-R pipes PN 16, including fittings & clamps complete: 25mm dia	m	113.60			
15.3	Providing and fixing PP-R pipes PN 16, including fittings & clamps complete: 32mm dia	m	200.00			
15.4	Providing and fixing European-type vitreous china W.C pedestal attached with vitreous china Dual Flush cistern (one piece set, 690x360x745 overall dimension) including seat and lid with c.p. brass hinges, fittings, brackets, repair walls complete (sample as shown in drawing or as per client's approval).	each	12			

SN	Description	Unit	Qty	Rate in Nu.		Total Amount (Nu.)
				Figure	Words	
15.5	Providing and fixing Indian-type vitreous china w.c squatting pan with vitreous china Dual Flush cistern including fittings, repair walls complete (sample as shown in drawing or as per client's approval).	each	14			
15.6	Providing and fixing white vitreous china flat back wash basin (550x400mm) including C.I brackets, 15mm c.p brass long arm lever operated Tap for basins (sample as shown in drawing or as per client's approval), 32mm pvc waste with 32mm dia trap & union and repair walls complete.	each	4			
15.7	Providing& and fixing white vitreous china wash basin (550x400mm) including C.I brackets, 15mm C.P brass pillar taps (push button type as shown in drawing), 32mm pvc waste with 32mm dia c.p brass bottle trap & union and repair walls complete.	each	22			
15.8	Providing and fixing c.p. brass stop cock: 15mm, angle, c.p knob	each	54			
15.9	Providing and fixing c.p. brass bibcock: 15mm, (push button type as shown in drawing), c.p knob	each	22			
15.10	Providing and fixing pedestals for basins, white vitreous china, recessed back for pipes and necessary fittings	each	2			
15.11	Providing and fixing Water Spray Head With Flexible hose, Chrome Plated ABS (Acrylonitrile butadiene styrene) Health Faucet with 1.5m SS Flexible Pipe and ABS Wall Hook complete.	each	26			
15.12	Providing and fixing 600x450mm bevelled edge mirror (superior glass) including accessories for proper fixing to wall.	each	14			
15.13	Providing and fixing C.P brass toilet paper holder	each	26			
15.14	Providing and fixing C.P brass soap dish including brackets, wooden cleats, screws complete	each	26			

SN	Description	Unit	Qty	Rate in Nu.		Total Amount (Nu.)
				Figure	Words	
15.15	Providing and fixing stainless steel Grab Bar, swing type mounted on wall with necessary screws & accessories complete (sample as shown in drawing or as per client's approval)	each	2			
15.16	Providing & fixing plastic tank including all accessories complete: 1000 litre capacity	each	8			
15.17	Providing and installing 32 mm ball valve with plastic float	each	4			
15.18	Providing and fixing brass full way valve with wheel: 32mm dia	each	4			
15.19	Providing and fixing PP-R stop cock: 25mm dia	each	8			
15.20	Providing and fixing PP-R full way valve/stop cock: 32mm dia	each	16			
16	**Sewerage Works**					
16.1	Hand excavation and refilling in layers < 200mm, of trenches for pipes & sockets, cables, including dressing of sides/ ramming of bottom, depth upto 1.5m, disposal of surplus material within lead of 50m: All kinds of soil-Pipes, cables etc. 80mm < dia < 300mm.	m	352.00			
16.2	Providing & fixing P.V.C soil waste and vent pipes, single or double socketed, including pipe clip complete (excluding the cost of PVC fittings)-75mm.	m	80.60			
16.3	Providing & fixing P.V.C soil waste and vent pipes, single or double socketed, including pipe clip complete (excluding the cost of PVC fittings)-110mm.	m	176.00			
16.4	Providing & fixing P.V.C plain bend. -75mm dia.	each	26			
16.5	Providing and fixing P.V.C plain bend: 110mm dia	each	26			
16.6	Providing and fixing P.V.C door bend: 75mm dia	each	26			
16.7	Providing and fixing P.V.C door bend: 110mm dia	each	26			
16.8	Providing and fixing P.V.C Nahani Trap with C.P grating: 110mm inlet & 75mm outlet	each	34			
16	**External Works**					

SN	Description	Unit	Qty	Rate in Nu.		Total Amount (Nu.)
				Figure	Words	
17.1	Providing and laying Plinth Protection with 75mm thick reinforced cement concrete 1:2:4, 20mm aggregates, laid over 150mm thick stone soling over well compacted earth including formwork, grouting with fine sand mix and broom or brush finishing the top (stone soling and reinforcement to be paid separately)	sq.m	118.68			
17.2	Constructing Brick masonry manhole in cement mortar 1:5, R.C.C top slab with 1:2:4 20mm aggregates, foundation concrete 1:4:8 40mm aggregates, 12mm plaster in CM 1:3 finished with floating coat of neat cement and making channels in cement concrete 1:2:4 20mm aggregates, neatly finished complete , Inside dimension 900 x 800mm & 600mm deep including C.I. cover & frame (weight >38 kg) Interception Pit.	each	20			
17.3	Constructing second class brick masonry open surface drain in cement mortar 1:4 including earth work in excavation 100 mm thick concrete bed 1:5:10, 40mm aggregate and 25mm thick cement concrete 1:2:4, 12mm aggregate for filling haunches including 12mm cement plastering 1:4 with a floating coat of neat cement and disposal of surplus earth etc. complete: 250mm wide x 300mm depth	m	160.00			
	Sub Total (Toilet for girls and boys)					

8. Kitchen

SN	Description	Unit	Qty	Rate in Nu.		Total Amount (Nu.)
				Figure	Words	
1	**Earthwork**					
1.1	Excavation in foundation trenches or drains, not exceeding 1.5 m in width or 10 sq.m on plan, including setting out, dressing of sides, ramming and leveling of bottoms, and disposal of surplus excavated material within 50 m lead and 1.s5 m lift, in all kinds of soil and rock, with or without blasting, complete.	cu.m	38.58			
1.2	Filling of trenches, sides of foundations, areas to be raised etc. including compaction in layers < 200mm using selected excavated earth within lead 50m &lift 1.5m.	cu.m	16.40			
1.3	Providing and laying dry earth bedding, including consolidating each deposited layer by watering, ramming and dressing.	cu.m	17.71			
2	**Damp Proof Course**					
2.1	Providing & laying 75mm thick sand bedding, including watering, ramming and dressing.	cu.m	4.76			
2.2	Providing and laying moisture barrier using plastic sheeting underlay -200 micro meter.	sq.m	59.50			
3	**Stone work**					
3.1	Providing and laying Hand packed stone filling or soling with stones.	cu.m	18.45			
3.2	Providing and laying Random Rubble Masonry with hard stone in CM 1:4 in foundation and upto plinth level.	cu.m	38.26			
4	**Concrete Work**					
4.1	Providing and laying in position plain cement concrete -1:3:6 (1 cement: 3 sand: 6 graded crushed rock 20 mm nominal size) excluding the cost of centering and shuttering - All work upto plinth level.	cu.m	14.96			

SN	Description	Unit	Qty	Rate in Nu.		Total Amount (Nu.)
				Figure	Words	
4.2	Providing and laying in position plain cement concrete - 1:2:4 (1 cement: 2 sand: 4 graded crushed rock 20 mm nominal size) excluding the cost of centering and shuttering - All work upto plinth level	cu.m	5.02			
5	**RCC Work**					
5.1	Providing & laying in position reinforced cement concrete 1:1.5:3 (1 cement: 1.5 sand: 3 graded crushed rock 20 mm nominal size) excluding the cost of centering, shuttering and reinforcement - all work upto plinth level.	cu.m	19.68			
5.2	Providing & laying in position reinforced cement concrete 1:1.5:3 (1 cement: 1.5 sand: 3 graded crushed rock 20 mm nominal size) in columns, Pillars, posts above plinth up to roof excluding the cost of centering, shuttering and reinforcement.	cu.m	0.53			
5.3	Providing & laying in position reinforced cement concrete 1:1.5:3 (1 cement: 1.5 sand: 3 graded crushed rock 20 mm nominal size) in beams, lintels, slabs, staircase above plinth up to roof excluding the cost of centering, shuttering and reinforcement.	cu.m	7.16			
6	**Steel Reinforcement**					
6.1	Providing & fixing Thermo-Mechanically Treated reinforcement bar (Yield Strength 500 MPa) for R.C.C work including cutting, bending, binding and placing in position complete.	kg	2,211.21			
7	**Form Work**					
7.1	Providing & fixing centering and shuttering (formwork) using Timber, including strutting, propping etc. and removal of formwork-Foundation, Footings and all works upto Plinth Level, etc.	sq.m	69.38			

SN	Description	Unit	Qty	Rate in Nu.		Total Amount (Nu.)
				Figure	Words	
7.2	Providing & fixing centering and shuttering (formwork) using Shuttering Plywood, including Timber frame and timber strutting, propping with complete form tie system etc., and removal of formwork- Columns, Pillars, Post, Struts, etc.	sq.m	45.32			
7.3	Providing & fixing centering and shuttering (formwork) using Shuttering Plywood, including Timber frame and timber strutting, propping with complete form tie system etc., and removal of formwork- Lintels, Beams, Griders, Bresummers, Cantilevers etc.	sq.m	33.29			
8	**Coursed Rubble Masonry/ Cement Concrete Block**					
8.1	Providing & laying Coursed Rubble Masonry with hard stone hammer-dressed in foundation & plinth (In cement mortar 1:4) including superstructure above plinth level upto floor three level (including all lifts and heights) - 400mm Thick.	cu.m	53.18			
8.2	Providing & laying concrete block brick in Foundation & Plinth including superstructure above plinth level upto floor three level (including all lifts and heights) - 250mm Thick.	cu.m	14.98			
8.3	Providing & laying locally manufactured Concrete Solid Block Masonry (115mm) in superstructure below floor 2 level in cement mortar 1:4.	sq.m	2.92			
9	**Door and Window**					
9.1	Providing & fixing in position dressed woodwork in frame for door including flush door shutter (pre-fabricated), block-board with ply vaneer 35mm thick treated with anti-termite polishes with all fittings & fixtures & hold fasts as per drawing complete. Rate includes traditional RCC cornices, synthetic enamel painting on internal woodwork, and traditional painting on internal and external surfaces, complete as directed by the Engineer-in-Charge.			s		
9.1.1	D135	each	1			

SN	Description	Unit	Qty	Rate in Nu.		Total Amount (Nu.)
				Figure	Words	
9.1.2	D85	each	2			
9.1.3	D100	each	1			
9.2	Providing & fixing in position dressed wood work in frame for window including aluminium framed windows in position with all accessories, including sliding shutters glazed with 5 mm thick plain glass, pelmet and curtain rod, and all required fittings, fixtures, and holdfasts, complete as per drawings and specifications. Rate includes traditional RCC cornices, synthetic enamel painting on internal woodwork, and traditional painting on internal and external surfaces, complete as directed by the Engineer-in-Charge.					
9.2.1	W219	each	2			
9.2.2	KW150	each	5			
9.2.3	V80	each	1			
10	**Steel work**					
10.1	Steel work welded, in built up sections, trusses, frame-works including cutting, hoisting, fixing and appl. priming coat of red lead paint- In Tubular sections.	kg	1,320.86			
10.2	Steel work welded, in built up sections, trusses, frame-works including cutting, hoisting, fixing and appl. Priming coat of red lead paint- In M.S Angles/ Tee for external ceiling	kg	398.18			
10.3	Providing & fixing M.S. round hold-down bolts with nuts and washer plates	kg	67.27			
10.4	Providing & fixing bolts of various sizes including nuts & washers.	kg	8.88			
10.5	Providing, making and fixing, M.S Gusset Plate, straps, flats, sole plates etc., complete in roof truss work.	kg	436.54			
11	**Roof Work**					

SN	Description	Unit	Qty	Rate in Nu.		Total Amount (Nu.)
				Figure	Words	
11.1	Providing & fixing Pre-Painted Galvanised Iron (PPGI) sheets, including bolts, hooks and nuts 8mm dia. with bitumen and G.I limpet washers filled with white lead for connection, excluding the cost of purlins, rafter and trusses (24g, 0.50mm).	sq.m	121.48			
11.2	Providing & fixing 600mm ridges or hips in Pre Painted Steel sheets, including bolts, hooks and nuts 8mm dia G.I limpet and bitumen washers for connection. -25g	m	11.05			
11.3	Providing and fixing to frames 8 mm thick Cement Fiber Board in ceiling or sofit including ceiling frames as per manufacturer's specifications (sample to be approved by client)	sq.m	160.27			
11.4	Providing & fixing Eaves board (225x25mm) with moulding fitted and fixed with necessary screws - Mixed Conifer.	m	42.70			
11.5	Providing and fixing on wall face single socketed rigid PVC (Working Pressure 4kgf per sq.cm) rainwater pipes including jointing with seal ring leaving 10 mm gap for thermal expansion- complete. -90 mm dia.	m	11.00			
11.6	Providing & fixing Semicircular/half round Poly Vinyl Chloride (PVC) roof gutter of 180mm dia 3.04m long, including fittings (brackets, bolts, nuts, washer, end cap, tee end cap etc.) excluding the cost of pipes	m	42.30			
12	**Flooring Work**					
12.1	Providing & laying 40mm thick marble chips flooring top layer 6mm thick with white, black or black and white marble chips of nominal size 1.5-3mm in proportion 1:2 (cement: chips), on 34mm thick concrete base in cement concrete 1:2:4, 12.5mm aggregate (cement and marble powder mix shall be of the ratio 3 part of cement to 1 part of marble powder).	sq.m	54.82			

SN	Description	Unit	Qty	Rate in Nu.		Total Amount (Nu.)
				Figure	Words	
12.2	Providing & fixing Terrazzo or Marble chips skirting < 300mm height top layer 6mm thick with white or black, black and white marble chips size 4mm in proportion 1:2, laid on 12.5mm thick cement plaster 1:3 base.	sq.m	7.66			
12.3	Providing and laying vitrified tiles in flooring, treads of steps and landings in different sizes (Sizes and thickness to be specified by the engineer/as per design) in all colors and shade, laid on 20 mm thick cement mortar 1:4 (1 cement: 4 coarse sand) finished with flush pointing in white cement, 600 x 600mm.	sq.m	6.52			
12.4	Providing and fixing vitrified tiles in skirting, step risers, dado and wall in different sizes (Sizes and thickness to be specified by the engineer/as per design) in all colors and shade, on 12 mm thick cement mortar 1:3 (1 cement:3 sand) finished with flush-pointing in white cement, 600 x 600mm.	sq.m	26.79			
12.5	Providing and laying Anti-skid tiles in flooring, treads of steps and landings in different sizes (Sizes and thickness to be specified by the engineer/as per design) in all colors and shade, laid on 20 mm thick cement mortar 1:4 (1 cement: 4 coarse sand) finished with flush pointing in white cement, 600 x 600mm	sq.m	3.64			
12.6	Providing and laying Pre-Polished/ Polished Granite of approved quality and source in flooring using necessary cement bedding in C.M. 1:4 upto 20 mm thick average cement slurry for fixing the tiles with required slopes, curing, cleaning, filling the joints with pigments of similar colour and at all levels with all leads and lifts etc ...complete as per directions of site in-charge and as per pattern required. - 18mm Thick granite stone flooring over 18mm thick base of cement mortar 1:4.	sq.m	5.27			
13	**Finishing Work**					

SN	Description	Unit	Qty	Rate in Nu.		Total Amount (Nu.)
				Figure	Words	
13.1	Providing and laying cement plaster in CM 1:4, 15 mm thick (Inside wall).	sq.m	170.26			
13.2	Providing & applying putty of thickness 2mm or more over plastered surface to prepare the surface even and smooth complete.	sq.m	170.26			
13.3	Providing and applying finishing coats Acrylic washable distemper, two coats on new work, including cement primer coat for internal walls and room ceiling.	sq.m	170.26			
13.4	Providing and applying finishing coats Synthetic enamel paint for steel & wood work, two coats on new work, including applying one coat of primers for external ceiling and internal portion for window & door.	sq.m	30.59			
14	**Plumbing Works**					
14.1	Providing and fixing 3-layer PP-R (Polypropylene Random Copolymer) PN-16 pipes, SDR 7.4 UV Stabilized and anti-microbial fusion welded, having thermal stability for hot and cold-water supply including all PP-R plain and brass Threaded Polypropylene random fittings including fixing pipe with clamps at 1.0m spacing. This includes testing of joints, cutting chases and making good the wall complete as per direction of Engineer-in- Charge. -20mm	m	60.00			
14.2	Providing & fixing c.p. towel rail 750 x 20mm with c.p brass brackets fixed to wooden cleats.	each	1			
14.3	Providing & fixing soap dish. -Recessed, ceramic, 200x100mm.	each	1			
14.4	Providing & fixing 600x450mm bevelled edge mirror (superior glass) incl.4mm A.C sheet base fixed to wooden cleats.	each	1			
14.5	Providing & fixing 450x120mm glass shelf, including c.p brass brackets fixed to wooden cleats.	each	1			

SN	Description	Unit	Qty	Rate in Nu.		Total Amount (Nu.)
				Figure	Words	
14.6	Providing & fixing c.p toilet paper holder.	each	1			
14.7	Providing & fixing European-type vitreous china w.c One piece Toilet with seat cover, repairing walls complete.	each	1			
14.8	Providing & fixing white vitreous china wash basin, including C.I brackets, 15mm C.P. brass pillar taps, c.p. chain & rubber plug, 32mm pvc waste, 32mm dia. trap & union, repair walls Flat back wash basin 630x450mm with a pair of 15mm c.p. brass pillar taps.	each	1			
14.9	Providing & fixing 25mm brass stop cock.	each	2			
14.10	Providing & fixing c.p. brass bibcock- 15mm, long body, c.p. knob.	each	18			
15	**Sewerage Works**					
15.1	Hand excavation and refilling in layers < 200mm, of trenches for pipes & sockets, cables, including dressing of sides/ ramming of bottom, depth upto 1.5m, disposal of surplus material within lead of 50m: All kinds of soil-Pipes, cables etc. 80mm < dia < 300mm.	m	35.00			
15.2	Providing & fixing P.V.C soil waste and vent pipes, single or double socketed, including pipe clip complete (excluding the cost of PVC fittings)- 75mm.	m	5.20			
15.3	Providing & fixing P.V.C soil waste and vent pipes, single or double socketed, including pipe clip complete (excluding the cost of PVC fittings)- 110mm.	m	3.00			
15.4	Providing & fixing P.V.C plain bend. -75mm dia.	each	3.00			
15.5	Providing & fixing P.V.C Single Tee with door. -110mm dia.	each	1			
15.6	Providing & fixing P.V.C Nahani Trap. -110mm inlet & 75mm outlet.	each	3			

SN	Description	Unit	Qty	Rate in Nu.		Total Amount (Nu.)
				Figure	Words	
15.7	Providing & laying H.D.P.E Pipes, 4 PN, including H.D.P.E fittings (excluding trenching, refilling & thrust block). -110mm.	m	35.00			
16	**External Works**					
16.1	Providing and laying 50mm thick Plinth Protection and grouted with fine sand mix including well rammed, finishing the top smooth. -With cement concrete 1:3:6, 20mm aggregates, laid over 75mm thick layer of compacted gravel (40mm).	sq.m	59.78			
16.2	Constructing second class brick masonry open surface drain in cement mortar 1:4 including earth work in excavation 100 mm thick concrete bed 1:5:10, 40mm aggregate and 25mm thick cement concrete 1:2:4,12 mm aggregate for filling haunches including 12mm cement plastering 1:4 with a floating coat of neat cement and disposal of surplus earth etc. complete-150mm wide x 200mm average depth.	m	42.70			
16.3	Constructing Brick masonry manhole/ inspection chamber in cement mortar 1:4, R.C.C top slab with 1:2:4 20mm aggregates, foundation concrete 1:4:8 40mm aggregates, 12mm plaster in CM 1:3 finished, Inside dimension 800 x 900mm & 450mm deep & additional depth as per site requirement including C.I. cover & frame (weight >38 kg).	each	2.00			
	Sub Total (Kitchen)					

II. Ancillary Works

9. Site Development

SN	Description	Unit	Qty	Rate in Nu.		Total Amount (Nu.)
				Figure	Words	
1	**Clearing of Jungle**					
1.1	Clearing jungle including uprooting of vegetation & trees of girth <300mm & disposal within 50m of the site.	sq.m	15,892.80			
2	**Football Ground, Volley Court and Basketball Court**					
2.1	Earth work in excavation over areas using Excavator, exceeding 300mm in depth, 1.5m in width as well as 10 sq.m in area on plan, including dressing, levelling and disposal of excavated earth, lead up to 50m and lift up to 1.5m. All kind of soil, and rock requiring chiseling (where blasting is prohibited).	cu.m	1,778.91			
2.2	Construction of embankment by providing and laying dry earth in horizontal layers not exceeding 200mm in depth(compacted), including watering, power rolling, dressing and preparation of site with selected excavated earth within 50mm lead	cu.m	9,464.05			
3	**Principal Quarter**					
3.1	Earth work in excavation over areas using Excavator, exceeding 300mm in depth, 1.5m in width as well as 10 sq.m in area on plan, including dressing, levelling and disposal of excavated earth, lead up to 50m and lift up to 1.5m. All kind of soil, and rock requiring chiseling (where blasting is prohibited).	cu.m	1,778.91			
4	**Adm and Laboratory**					
4.1	Earth work in excavation over areas using Excavator, exceeding 300mm in depth, 1.5m in width as well as 10 sq.m in area on plan, including dressing, levelling and disposal of excavated earth, lead up to 50m and lift up to 1.5m. All kind of soil, and rock requiring chiseling (where blasting is prohibited).	cu.m	3,285.56			
5	**Classroom Block 2**					

SN	Description	Unit	Qty	Rate in Nu.		Total Amount (Nu.)
				Figure	Words	
5.1	Earth work in excavation over areas using Excavator, exceeding 300mm in depth, 1.5m in width as well as 10 sq.m in area on plan, including dressing, levelling and disposal of excavated earth, lead up to 50m and lift up to 1.5m. All kind of soil, and rock requiring chiseling (where blasting is prohibited).	cu.m	607.47			
6	**Toilet 1**					
6.1	Earth work in excavation over areas using Excavator, exceeding 300mm in depth, 1.5m in width as well as 10 sq.m in area on plan, including dressing, levelling and disposal of excavated earth, lead up to 50m and lift up to 1.5m. All kind of soil, and rock requiring chiseling (where blasting is prohibited).	cu.m	1,264.11			
7	**Toilet 2**					
7.1	Earth work in excavation over areas using Excavator, exceeding 300mm in depth, 1.5m in width as well as 10 sq.m in area on plan, including dressing, levelling and disposal of excavated earth, lead up to 50m and lift up to 1.5m. All kind of soil, and rock requiring chiseling (where blasting is prohibited).	cu.m	756.68			
8	**Courtyard**					
8.1 8.1	Earth work in excavation over areas using Excavator, exceeding 300mm in depth, 1.5m in width as well as 10 sq.m in area on plan, including dressing, levelling and disposal of excavated earth, lead up to 50m and lift up to 1.5m. All kind of soil, and rock requiring chiseling (where blasting is prohibited).	cu.m	1,868.82			
8.2	Construction of embankment by providing and laying dry earth in horizontal layers not exceeding 200mm in depth(compacted), including watering, power rolling, dressing and preparation of site with selected excavated earth within 50mm lead.	cu.m	810.00			
9	**Classroom Block 1**					

SN	Description	Unit	Qty	Rate in Nu.		Total Amount (Nu.)
				Figure	Words	
9.1	Earth work in excavation over areas using Excavator, exceeding 300mm in depth, 1.5m in width as well as 10 sq.m in area on plan, including dressing, levelling and disposal of excavated earth, lead up to 50m and lift up to 1.5m. All kind of soil, and rock requiring chiseling (where blasting is prohibited).	cu.m	1,121.38			
10	**MHP**					
10.1	Earth work in excavation over areas using Excavator, exceeding 300mm in depth, 1.5m in width as well as 10 sq.m in area on plan, including dressing, levelling and disposal of excavated earth, lead up to 50m and lift up to 1.5m. All kind of soil, and rock requiring chiseling (where blasting is prohibited).	cu.m	3,365.61			
11	**Parking and Road**					
11.1	Earth work in excavation over areas using Excavator, exceeding 300mm in depth, 1.5m in width as well as 10 sq.m in area on plan, including dressing, levelling and disposal of excavated earth, lead up to 50m and lift up to 1.5m. All kind of soil, and rock requiring chiseling (where blasting is prohibited).	cu.m	91.57			
12	**Transportation**					
12.1	Transport of loose earth and rock in designated locations including loading/ unloading, dressing of dump sites beyond 50m lead and upto 5.00km.	cu.m	4,540.26			
	Sub Total (Site development)					

10. Retaining Walls

SN	Description	Unit	Qty	Rate in Nu.		Total Amount (Nu.)
				Figure	Words	
1	Earth work in open area excavation, depth <300mm, width >1.5m, area >10 Sq.m in plan, including disposal of excavated earth within 50m lead & 1.5m lift and disposed soil to be neatly dressed. All kind of soil, and rock requiring chiseling (where blasting is prohibited).	cu.m	1,949.64			
2	Providing and laying Hand packed stone filling or soling with stones.	cu.m	142.28			
3	Providing and laying in position plain cement concrete - 1:3:6 (1 cement: 3 sand: 6 graded crushed rock 20 mm nominal size) excluding the cost of centering and shuttering.	cu.m	102.77			
4	Providing & laying Random Rubble Masonry with hard stone in foundation & plinth and in superstructure (1:5).	cu.m	2,587.01			
5	Providing & fixing centering and shuttering (formwork), including strutting, propping etc. and removal of formwork - Foundation and plinth including in superstructure.	sq.m	433.98			
6	Filling of trenches, sides of foundations etc. in layers <200mm using selected excavated earth, ramming etc. within lead 50m & lift 1.5m.	cu.m	3,178.2			
	Sub Total (Retaining wall)					

11. Chain Link Fence

SN	Description	Unit	Qty	Rate in Nu.		Total Amount (Nu.)
				Figure	Words	
1	Earth work in surface excavation, depth 1.5m, area >10 Sq.m in plan, including disposal of excavated earth within 50m lead & 1.5m lift and disposed soil to be neatly dressed.	sq.m	600.00			
2	Earth work in open area excavation, depth <300mm, width >1.5m, area >10 Sq.m in plan, including disposal of excavated earth within 50m lead & 1.5m lift and disposed soil to be neatly dressed. All kind of soil, and rock requiring chiseling (where blasting is prohibited).	cu.m	13.55			
3	Steel work welded, in built up sections, trusses, frame-works including cutting, hoisting, fixing and appl. priming coat of red lead paint - In Angle sections.	kg	3,569.74			
4	Providing & fixing G.I chain-link mesh 4mm (8 SWG) x 50mm including fixing of post or struts, G.I staples (excluding the cost of posts/struts, earthwork, concrete etc.)	sq.m	1,200.00			
5	Providing and laying in position plain cement concrete 1:3:6 (1 cement: 3 sand: 6 graded crushed rock 20 mm nominal size) excluding the cost of centering and shuttering - All work upto plinth level.	cu.m	64.84s			
6	Providing & fixing centering and shuttering (formwork), including strutting, propping etc. and removal of formwork - Foundation and plinth including in superstructure.	sq.m	504.48			
7	Providing & fixing G.I barbed Wire Netting including fixing of post or struts, G.I staples, coal tarring in case of ballies complete (posts/struts, earthwork, concrete paid separately)- 2.5mm, (12 SWG), 4 barbs form by twisting two-point wires, each two turns, pitch of barbs 75mm	m	1,800.00			
	Sub Total (Chain link fence)					

12. Inter Link Footpath

SN	Description	Unit	Qty	Rate in Nu.		Total Amount (Nu.)
				Figure	Words	
1	Earth work in surface excavation, depth <300mm, width >1.5m, area >10 Sq.m in plan, including disposal of excavated earth within 50m lead & 1.5m lift and disposed soil to be neatly dressed.	sq.m	819.48			
2	Providing and laying dry earth bedding, including consolidating each deposited layer by watering, ramming and dressing.	cu.m	81.95			
3	Providing and laying dry hand packed stone soling/coarse aggregate filling with hard stone.	cu.m	81.95			
4	Providing and laying in position plain cement concrete 1:3:6 (1 cement: 3 sand: 6 graded crushed rock 20 mm nominal size) excluding the cost of centering and shuttering - All work upto plinth level.	cu.m	61.46			
5	Providing and laying 25 mm thick sand bedding under floor.	cu.m	61.46			
6	Providing and laying factory made Cement Concrete paver blocks in footpath, parks, lawns, etc, of required strength, thickness & size/ shape, laid in required colour & pattern over 50mm thick compacted bed of sand, compacting and proper embedding/laying of inter locking paver blocks into the sand bedding, filling the joints with sand and cutting of paver blocks as per required size and pattern, finishing and sweeping extra sand. complete all as per direction of Engineer-in-Charge. -Rectangular Paver Block 40mm Thk Ash Grey.	sq.m	819.48			
7	Providing and laying factory made kerb stone (Edging)in position to the required line, level and curvature, jointed with cement mortar 1:3 (1 cement: 3 coarse sand), including making joints with or without grooves (thickness of joints except at sharp curve shall not to more than 5mm), including making drainage opening wherever required complete etc. as per direction of Engineer-in-charge. (Length &	sq.m	39.91			

SN	Description	Unit	Qty	Rate in Nu.		Total Amount (Nu.)
				Figure	Words	
	Depth/height of finished kerb edging shall be measured for payment)					
	Sub Total (Inter link footpath)					

13. Internal Road with Parking

SN	Description	Unit	Qty	Rate in Nu.		Total Amount (Nu.)
				Figure	Words	
1	Preparation of sub grade with proper camber by excavating earth to depth equal to pavement thickness, consolidation with roller, disposal of surplus earth up to 50m - All kind of soil.	cu.m	270.00			
2	Consolidation of subgrade with roller, and making good the undulation with earth and re-rolling the subgrade	sq.m	900.00			
3	Providing and laying Granular sub-base course (GSB) to required degree of compaction with proper formation of cross fall using motor for laying and compacted to required density as per material gradation and aggregate quality specified - 150mm Thick.	cu.m	135.00			
4	Providing and laying wet mix macadam graded aggregate base course to required degree of compaction with proper formation of cross fall by using well graded crushed aggregates premixed with OMC using suitable mixer, motor grader as per material gradation and an aggregates quality specified - 100mm Thick.	cu.m	90.00			
5	Providing and Laying Dense Bituminous Macadam (DBM) to required degree of compaction based on job mixture design (job mix formula) approved by the supervising engineer, by mechanized method as per material gradation and materials quality specified using VG20/VG30 complete - 50mm Thick.	sq.m	900.00			

SN	Description	Unit	Qty	Rate in Nu.		Total Amount (Nu.)
				Figure	Words	
6	Providing and Laying Asphalt/Bituminous Concrete to required degree of compaction based on the job mixture design (job mix formula) approved by the supervising engineer, by mechanized method as per material gradation and materials quality specified using VG20/VG30 complete - 30mm Thick.	sq.m	900.00			
7	Construction of Lined V Shaped drain 600 X 300 with 50mm thick PCC 1:2:4, 150mm thick stone soling, RRM in CM 1:5 on sides, finished with 20mm thick 1:4 cement plaster including excavation, levelling and disposal of surplus earth within 50m.	m	125.00			
	Sub Total (Internal Road with parking)					

14. RRM Staircase for Ramp

SN	Description	Unit	Qty	Rate in Nu.		Total Amount (Nu.)
				Figure	Words	
1	Earth work in excavation over areas, depth >300mm, width >1.5m, area >10 Sq.m on plan, including disposal of excavated earth within 50m lead and 1.5m lift & disposed soil to be neatly dressed - All kind of soils.	cu.m	30.75			
2	Providing and laying Hand packed stone filling or soling with stones.	cu.m	5.80			
3	Providing and laying in position plain cement concrete 1:3:6 (1 cement: 3 sand: 6 graded crushed rock 20 mm nominal size) excluding the cost of centering and shuttering - All work upto plinth level.	cu.m	5.80			
4	Providing & laying Random Rubble Masonry with hard stone in foundation & plinth and in superstructure (1:5).	cu.m	120.87			

SN	Description	Unit	Qty	Rate in Nu.		Total Amount (Nu.)
				Figure	Words	
5	Providing & fixing centering and shuttering (formwork), including strutting, propping etc. and removal of formwork - Foundation and plinth including all lifts and heights.	sq.m	19.92			
6	Filling of trenches, sides of foundations etc. in layers <200mm using selected excavated earth, ramming etc. within lead 50 m & lift 1.5m.	cu.m	4.50			
	Sub Total (RRM staircase for ramp)					

15. Walkway for Ramp

SN	Description	Unit	Qty	Rate in Nu.		Total Amount (Nu.)
				Figure	Words	
1	Earth work in open area excavation, depth <300mm, width >1.5m, area >10 Sq.m in plan, including disposal of excavated earth within 50m lead & 1.5m lift and disposed soil to be neatly dressed. All kind of soil, and rock requiring chiseling (where blasting is prohibited.	cu.m	38.50			
2	Providing and laying Hand packed stone filling or soling with stones.	cu.m	11.55			
3	Providing and laying in position plain cement concrete 1:3:6 (1 cement: 3 sand: 6 graded crushed rock 20 mm nominal size) excluding the cost of centering and shuttering - All work upto plinth level.	cu.m	11.55			
4	Providing & laying Random Rubble Masonry with hard stone in foundation & plinth and in superstructure (1:5).	cu.m	127.03			
5	Providing & fixing centering and shuttering (formwork), including strutting, propping etc. and removal of formwork - Foundation and plinth including all lifts and heights.	sq.m	10.35			

SN	Description	Unit	Qty	Rate in Nu.		Total Amount (Nu.)
				Figure	Words	
6	Filling of trenches, sides of foundations etc. in layers <200mm using selected excavated earth, ramming etc. within lead 50 m & lift 1.5m.	cu.m	54.44			
	Sub Total (Walkway for ramp)					

16. MS Railing for Footpath and Wall Top

SN	Description	Unit	Qty	Rate in Nu.		Total Amount (Nu.)
				Figure	Words	
1	Steel work welded, in built up sections, trusses, frame-works including cutting, hoisting, fixing and appl. priming coat of red lead paint.	kg	10,807.33			
2	Providing and laying in position plain cement concrete 1:3:6 (1 cement: 3 sand: 6 graded crushed rock 20 mm nominal size) excluding the cost of centering and shuttering - All work upto plinth level.	cu.m	9.02			
3	Providing & fixing centering and shuttering (formwork) using Timber, including strutting, propping etc. and removal of formwork - In foundation and upto plinth level.	sq.m	120.24			
4	Providing and applying finishing coat synthetic enamel, for steel & wood work, two coats on new work	sq.m	6,575.48			
	Sub Total (MS Railing for Footpath and wall top)					

17. Sewerage Line, Pipeline and Drainage

SN	Description	Unit	Qty	Rate in Nu.		Total Amount (Nu.)
				Figure	Words	
1	Excavation in foundation trenches or drains, not exceeding 1.5 m in width or 10 sq.m on plan, including setting out, dressing of sides, ramming and leveling of bottoms, and disposal of surplus excavated material within 50 m lead and 1.5 m lift, in all kinds of soil and rock, with or without blasting, complete.	cu.m	603.97			
2	Hand excavation and refilling in layers < 1.5m, of trenches for pipes & sockets, cables, including dressing of sides/ ramming of bottom, depth upto 1.5m, disposal of surplus material within lead of 50m: All types of soil.					
2.1	Pipes, cables etc. 80mm < dia < 300mm	m	471.85			
2.2	Pipes, cables etc. dia < 80mm	m	471.85			
3	Providing & fixing centering and shuttering (formwork) using Timber, including strutting, propping etc. and removal of formwork - In foundation and upto plinth level.	cu.m	73.14			
4	Providing and laying in position plain cement concrete excluding the cost of centering and shuttering - All work upto plinth level - -1:3:6 (1 cement: 3 sand: 6 graded crushed rock 20 mm nominal size)	cu.m	42.47			
5	Providing and laying in position plain cement concrete excluding the cost of centering and shuttering - All work upto plinth level. 25mm thick cement concrete 1:2:4,12 mm aggregate for filling haunches including 12mm cement plastering 1:4 with a floating coat of neat cement	cu.m	4.72			
6	Providing & laying Random Rubble Masonry with hard stone in foundation & plinth, in superstructure upto floor 2 level- In cement mortar 1:5 including all lifts & heights	cu.m	226.49			

SN	Description	Unit	Qty	Rate in Nu.		Total Amount (Nu.)
				Figure	Words	
7	Providing & fixing centering and shuttering (formwork), including strutting, propping etc. and removal of formwork - Foundation and plinth including all lifts and heights.	sq.m	707.78			
8	Filling of trenches, sides of foundations etc. in layers <200mm using selected excavated earth, ramming etc. within lead 50 m & lift 1.5m.	cu.m	60.00			
9	Providing & laying 20mm cement plaster - C.M 1:4	sq.m	943.70			
10	Providing & laying H.D.P.E Pipes, 6 PN, including H.D.P.E fittings (excluding trenching, refilling & thrust block)- 250mm.	m	471.85			
11	Providing and fixing 3-layer PP-R (Polypropylene Random Copolymer) PN 16 pipes, SDR 7.4 UV Stabilized and anti-microbial fusion welded, having thermal stability for hot and cold-water supply including all PP-R plain and brass Threaded Polypropylene random fittings including connection from existing GI-pipe, excluding trenching, refilling but including testing of joints complete as per direction of Engineer-in- Charge. – 32mm	m	109.72			
12	Steel work welded, in built up sections, frame-works including cutting, hoisting, fixing and appl. priming coat of red lead paint-In Tees and flats as drain grating cover. (Main frame: M.S Angle 35*35*5mm and M.S Flat 30*5mm @40mm c/c)	m	689.32			
	Sub Total (Sewerage Line, Pipeline and Drainage)					

18. Courtyard

SN	Description	Unit	Qty	Rate in Nu.		Total Amount (Nu.)
				Figure	Words	
1	Providing and laying dry earth bedding, including consolidating each deposited layer by watering, ramming and dressing	cu.m	67.84			

SN	Description	Unit	Qty	Rate in Nu.		Total Amount (Nu.)
				Figure	Words	
2	Providing and laying dry hand packed stone soling/coarse aggregate filling with hard stone.	cu.m	67.84			
3	Providing & Laying PCC 1:3:6, 20mm aggregate and down guage under foundation, plinth, column footing and wall bases.	cu.m	50.88			
4	Providing and laying 25 mm thick sand bedding under floor.	cu.m	50.88			
5	Providing and laying Chequered precast cement concrete tiles 25 mm thick in footpath & courtyard, jointed with neat cement slurry mixed with pigment to match the shade of tiles, including rubbing and cleaning etc. complete, on 20 mm thick bed of cement mortar 1:4 (1 cement: 4 coarse sand). - Chequered tiles, Paver tiles. 25mm Thk. Colour	sq.m	678.40			
6	Providing and laying factory made kerb stone (Edging)in position to the required line, level and curvature, jointed with cement mortar 1:3 (1 cement: 3 coarse sand), including making joints with or without grooves (thickness of joints except at sharp curve shall not to more than 5mm), including making drainage opening wherever required complete etc. as per direction of Engineer-in-charge (Length & Depth/height of finished kerb edging shall be measured for payment)	sq.m	67.84			
	Sub Total (Courtyard)					

19. Compound Gate

SN	Description	Unit	Qty	Rate in Nu.		Total Amount (Nu.)
				Figure	Words	
1	Excavation in foundation trenches or drains not exceeding 1.5m in width or area 10 sq.m on plan, including dressing & ramming, disposal of surplus soil within 50m lead & 1.5m lift - all types of soil and all types of rock requiring chiseling (where blasting is prohibited).	cu.m	3.60			
2	Filling of trenches, sides of foundations etc. in layers < 200mm using selected excavated earth, ramming etc. within lead 50m & lift 1.5m.	cu.m	0.84			
3	Providing and laying in position plain cement concrete 1:3:6 (1 cement: 3 sand: 6 graded crushed rock 20 mm nominal size) excluding the cost of centering and shuttering - All work upto plinth level.	cu.m	0.60			
4	Providing and laying hand packed stone filling or soling with stones.	cu.m	0.90			
5	Providing & laying in position reinforced cement concrete work in 1:1.5:3 (1 cement: 1.5 sand: 3 graded crushed rock 20mm nominal) in foundation, column and beam etc. upto floor five level excluding the cost of centering, shuttering and reinforcement.	cu.m	2.09			
6	Providing & fixing centering and shuttering with timber including strutting, propping etc. and removal of formwork in foundation, column and beam etc.	sq.m	18.66			
7	Providing & fixing Thermo-Mechanically Treated reinforcement bar (Yield Strength 500 MPa) for R.C.C work including cutting, bending, binding and placing in position complete.	kg	324.75			
8	Providing and laying Course Rubble Masonry in cement mortar (1:4) using hard stone, chisel dressed with flush pointing, in the superstructure above plinth level and below, including floor 2 level. The hard stone cladding shall be chisel dressed to a size of 100x100x10mm.	cu.m	1.78			

SN	Description	Unit	Qty	Rate in Nu.		Total Amount (Nu.)
				Figure	Words	
9	Steel work welded, in built up sections, trusses, frame-works including cutting, hoisting, fixing and applying priming coat of red lead paint in tees, angles and flats.	kg	349.84			
10	Providing & fixing M.S Anchor 1/2" Bolt (Nuts and Washers) - 200mm long	kg	5.04			
11	Proving, Making and Fixing M.S sole plates	kg	90.43			
12	Proving and fixing Gate Hinges with Needle Roller Bearing (heavy Duty) as per sample in drawing	each	12			
13	Providing & applying finishing coats synthetic enamel for steel work, two coat on new work.	sq.m	34.33			
	Sub Total (Compound gate)					

20. RRM Water Tank

SN	Description	Unit	Qty	Rate in Nu.		Total Amount (Nu.)
				Figure	Words	
1	Excavation in foundation trenches or drains not exceeding 1.5m in width or area 10 sq.m on plan, including dressing & ramming, disposal of surplus soil within 50m lead & 1.5m lift - all types of soil and rock requiring chiseling (where blasting is prohibited).	cu.m	9.90			
2	Filling of trenches, sides of foundations etc. in layers < 200mm using selected excavated earth, ramming etc. within lead 50m & lift 1.5m.	cu.m	3.08			
3	Providing and laying hand packed stone filling or soling with stones.	cu.m	2.70			
4	Providing and laying in position plain cement concrete 1:3:6 (1 cement: 3 sand: 6 graded crushed rock 20 mm nominal size) excluding the cost of centering and shuttering - All work upto plinth level.	cu.m	1.35			
5	Providing & laying in position reinforced cement concrete 1:1.5:3 (1 cement: 1.5 sand: 3 graded					

SN	Description	Unit	Qty	Rate in Nu.		Total Amount (Nu.)
				Figure	Words	
	crushed rock 20 mm nominal size) excluding the cost of centering, shuttering and reinforcement - all work upto plinth level, in walls and slabs.	cu.m	4.42			
6	Providing & fixing centering and shuttering (formwork) using shuttering plywood, including Timber frame and timber strutting, propping with complete form tie system etc, and removal of formwork - in foundation, all work upto plinth level, etc and walls (any thickness) and in slabs.	sq.m	12.13			
7	Providing & fixing Thermo-Mechanically Treated reinforcement bar (Yield Strength 500 MPa) for R.C.C work including cutting, bending, binding and placing in position complete.	kg	448.05			
8	Providing and fixing CI sluice valve with flange ends, pressure class 10kg/sq.cm conforming to standard specifications with nuts, bolts, washers and gaskets complete - 75mm.	each	1			
9	Providing & laying Random Rubble Masonry with hard stone in foundation & plinth and in superstructure (1:5).	cu.m	13.00			
10	Providing & fixing roof framing, in trusses, purlins, rafters, posts, post plates including hoisting, etc. (excluding steel items)- Class B(conifer)	cu.m	1			
11	Providing & fixing Pre - Painted Galvanised Iron (PPGI) sheets, including bolts, hooks and nuts 8mm dia. with bitumen and G.I limpet washers filled with white lead for connection, excluding the cost of purlins, rafter and trusses (25g, 0.50mm)	sq.m	25.84			
12	Providing and laying 20mm cement plaster in CM 1:4 (external).	sq.m	35.64			
13	Providing and laying cement plaster 20mm thick in CM 1:3, finished with floating coat of neat cement. (Internal).	sq.m	29.01			
14	Providing & fixing Aluminum ladder of 2.50m length as per direction of Engineer Incharge.	each	1			

SN	Description	Unit	Qty	Rate in Nu.		Total Amount (Nu.)
				Figure	Words	
15	Construction of Brick masonry manhole in cement mortar 1:5, RCC top slab with 1:2:4 20mm aggregates, foundation concrete 1:4:8 40mm aggregates, 12mm plaster in CM 1:3 finished with floating coat of neat cement and making channels in cement concrete 1:2:4 20mm aggregate, neatly finished complete including extra for additional depth of manholes - Inside dimension 1200x900mm & 900mm deep including C.I cover & frame (Medium Duty).	each	2			
16	Providing & laying cement concrete flooring 1:2:4, 12mm aggregates, 25mm thick finished with floating coat of neat cement.	sq.m	10.00			
	Sub Total (RRM water tank)					

III. Electrical Works

1. Principal's Quarter

SN	Description	Unit	Qty	Rate in Nu.		Total Amount (Nu.)
				Figure	Words	
A	**WIRING**					
1	Providing & Wiring for light, fans, call bell and 2 pin light socket outlet with 1.5 sq.mm 1.1kV grade, PVC insulated copper conductor cable (RR Kabel/HPL/Havells or equivalent) in recessed HDPE pipe with 6A modular type switch, MS boxes including connections, painting, testing and commissioning etc. as required.					
	Short Point	Point	3.00			
	Medium point	Point	18.00			
	Long point	Point	8.00			
2	Providing & Wiring for 5/6 pin, 6/16 ampere plug point with 4 sq.mm 1.1kV grade, PVC insulated copper conductor cable (RR Kabel/HPL/Havells or equivalent) in recessed HDPE pipe with providing and fixing 5/6 pin, 6/16 ampere socket outlet and switch including earthing the third pin, connections, painting, testing and commissioning etc. as required.					
	Medium point	Point	4.00			
	Long point	Point	14.00			
3	Providing & Wiring for points in excess length above long points with 1.1kV grade, PVC insulated copper conductor cable (RR Kabel/HPL/Havells or equivalent) in recessed HDPE pipe including connections, painting, testing and commissioning etc. as required (Legrand/ schneider make or equivalent)					
	2x1.5 sq.mm	Mtr	5.00			
	2x4 sq.mm	Mtr.	68.00			

SN	Description	Unit	Qty	Rate in Nu.		Total Amount (Nu.)
				Figure	Words	
4	Providing & Wiring for points in excess length above long points with 1.1kV grade, PVC insulated copper conductor cable (RR Kabel/HPL/Havells or equivalent) in recessed HDPE pipe including connections, painting, testing and commissioning etc. as required (Legrand/ schneider make or equivalent)					
	2x2.5 sq.mm	Mtr.	105.00			
B	**FITTINGS AND ACCESSORIES**					
5	Supplying of light fittings complete set with all accessories as required, with lamp (Havells/HPL/Vinay or Equivalent).					
	Cat No. Havells/LUMILINE Plus LED Tube/LUMILINEPLUSBS20WLED865SPCSS, 20W	Each	8.00			
	Cat No. /LED Surface Ceiling Light (Round)/Code-650024,6W	Each	9.00			
	Cat No. /LED Up-Down Wall Light (Indoor)/Code-688576,6W	Each	4.00			
	Cat No. /LED Up-Down Wall Light (Outdoor)/Code-680701,6W	Each	1.00			
6	Supplying of prewired call bell 250-volt A.C with base, terminal block and all accessories complete					
	Gong bell assembly	Each	1.00			
7	Supplying of Installation, testing and commissioning of exhaust fan 240-volt A.C 1400 rpm with all accessories such as frame with arm 3 Nos., sweep 3 Nos., condenser and fan body etc. complete as required (BSB Approved make)					
	300mm sweep	Each	1.00			
8	Supply, Installation, Testing and commissioning of three phase energy meter of suitable size after consulting BPC complete as required.	Job	1			

SN	Description	Unit	Qty	Rate in Nu.		Total Amount (Nu.)
				Figure	Words	
9	Supplying of Installation, testing and commissioning ceiling fan 240-volt A.C 1400 rpm with all accessories such as down rod, sweep 3 Nos., canopy 2 Nos., condenser and fan body etc. complete as required (BSB Approved make					
	1200 sweep	each	2.00			
C	**CONTROL, SWITCHGEARS & BUSBAR**					
10	Supplying of Installation, Testing and commissioning of panel molded case circuit breaker (MCCB) with electronic release, breaking capacity 25KA, 4 poles 415-volt A.C complete with all accessories etc. as required (BSB Approved Make)					
	63A	Each	1.00			
11	Supply of Installation, Testing and commissioning of miniature circuit breaker (MCB) single pole, 230-volt A.C complete with all accessories suitable to fix on a din-bar etc. as required (BSB Approved Make)					
	10A	Each	3.00			
	20A	Each	15.00			
12	Supply, Installation, Testing and commissioning of residual current circuit breaker (RCCB) 4 pole, sensitivity 30mA/100mA, 415-volt A.C complete with all accessories suitable to fix on a din-bar etc. as required (BSB Approved Make)					
	32A	Each	1.00			
13	Supply of TPN distribution board (DIN type, vertical) with acrylic door, 415-volt A.C complete with all accessories without MCB/isolator/RCCB outgoing or incoming etc. as required (BSB Approved Make/Legrand/equivalent)					
	6 way	Each	1.00			

SN	Description	Unit	Qty	Rate in Nu.		Total Amount (Nu.)
				Figure	Words	
14	Providing and fixing of standard Cubicle Metal Distribution board IP 65, 1,2mx0.6 m duly approved by engineer in-charge for enclosing the MCB DB Box (distribution board) locking arrangement etc. as required (BSB Approved Make)	Set	1.00			
15	Providing and supplying, installation, testing and commissioning of 5 star split type, Air conditioning, Hitachi, Panasonic, Samsung or equivalent 1.5 MT, Hot and Cold including wring of cables and associated works such as paintings, testing and commissioning.	Each	1			
D	**EARTHING**					
15	Provide and install earthing with GEE slab 5' x 1' x 2" -8 no's connected in series, including 25x4mm GI strip running up to DBs. Manufactured by Druk-Care GEE slab earthing system at Jimena, Thimphu or equivalent. For installation- visit website: www.drukcare.com	Set	1.00			
E	**POWER CABLE**					
16	Supplying of 4- Core 1.1KV grade PVC insulated and sheathed Aluminum conductor armored power cables					
	10 sq.mm	Mtr.	35.00			
17	Supplying Installation, Testing and Commissioning of end termination with heavy duty brass single compression gland for 4- Core 1.1KV grade PVC insulated and sheathed Copper/ Aluminum conductor armored/un-armored power cables					
	25mm Dia, 10sq.mm	Each	2.00			

SN	Description	Unit	Qty	Rate in Nu.		Total Amount (Nu.)
				Figure	Words	
18	Laying of one number PVC insulated and sheathed power cable copper/aluminum, armored/un-armored 1.1KV single core to four core direct in the ground including excavation, sand Cushing, protective covering and refilling the trenches etc. as required					
	Above 6sq.mm to 25sq.mm	Mtr.	35.00			
F	**TELEVISION**					
19	Supplying and drawing coaxial cable, **RG6** in recessed HDPE pipe including necessary cutting, connection, testing etc. as required.	Mtr	10.00			
20	Supplying & fixing of socket/regulator on existing metal box with fiber sheet cover (recessed or surface) including necessary cutting, connection testing etc.as required.					
	TV coaxial socket	Each	1.00			
21	Supply, Installation, Testing and commissioning Powder coated Telephone Tag Box including with all accessories.					
	Supplying Television Terminal Cabinet (TTC) (SQCA Appd.) as required.	Each	1.00			
22	Supplying and fixing of HDPE pipe on recessed including all accessories such as screws, bends, elbows, Tees, corners, etc. complete as required					
	25mm	Mtr	10.00			
23	Providing and supplying of 5-star Air conditioning, Hitachi or equivalent 1.5 MT, Hot and Cold including wiring of cables and associated works such as paintings, testing and commissioning as required in complete sets.	Each	1			
G	**Lighting Arrestor (Supply and Fix)**					
24	25mm Dia 900mm long copper tube four prong	each	1			

SN	Description	Unit	Qty	Rate in Nu.		Total Amount (Nu.)
				Figure	Words	
25	GI tube with finial base plate with 85x6 mm copper strip ,25mm dia, long.	each	1			
H	**Earthing for LA**					
26	Providing and fixing of earthing including all accessories, machinery enclosure, C.I cover plate having locking arrangement, water pipe with excavation and refilling work including charcoal or coke and salt complete required as per standard earthing drawing - With copper earth plate 600x600x3mm.	Sets	1			
27	Providing and drawing wire for loop earthing in existing surface/recessed PVC/MS/ steel conduit or casing capping or wooden batten along with other wires as required - 2.032mm (14 SWG) copper wire.	M	60			
28	Providing and laying earth connection from earth electrodes in 15mm dia. GI pipe from earth electrode as required as per guidance of standard earthing drawing … with 4.06mm Dia (8SWG) copper wire.	M	60			
	Sub Total (Principals quarter)					

2. Caretaker's Residence

SN	Description	Unit	Qty	Rate in Nu.		Total Amount (Nu.)
				Figure	Words	
A	**WIRING**					
1	Providing & Wiring for light, fans, call bell and 2 pin light socket outlets with 1.5 sq.mm 1.1kV grade, PVC insulated copper conductor cable (RR Kabel/HPL/Havells or equivalent) in recessed HDPE pipe with 6A modular type switch, MS boxes including connections, painting, testing and commissioning etc. as required (Legrand/ schneider make or equivalent)					
	Short Point	Point	3.00			
	Medium point	Point	8.00			
	Long point	Point	10.00			
2	Providing & Wiring for 5/6 pin, 6/16 ampere0 plug point with 4 sq.mm 1.1kV grade, PVC insulated copper conductor cable (RR Kabel/HPL/Havells or equivalent) in recessed HDPE pipe with providing and fixing 5/6 pin, 6/16 ampere socket outlet and switch including earthing the third pin, connections, painting, testing and commissioning etc. as required (Legrand/ schneider make or equivalent)					
	Short Point	point	2.00			
	Medium point	Point	2.00			
	Long point	Point	9.00			

SN	Description	Unit	Qty	Rate in Nu.		Total Amount (Nu.)
				Figure	Words	
3	Providing & Wiring for points in excess length above long points with 1.1kV grade, PVC insulated copper conductor cable (RR Kabel/HPL/Havells or equivalent) in recessed HDPE pipe including connections, painting, testing and commissioning etc. as required (Legrand/ schneider make or equivalent)					
	2x1.5 sq.mm	Mtr	17.00			
	2x4 sq.mm	Mtr.	30.00			
4	Providing & Wiring for lighting circuit and lighting point with 1.1kV grade, PVC insulated copper conductor cable (RR Kabel/HPL/Havells or equivalent) in recessed HDPE pipe including connections, painting, testing and commissioning etc. as required (Legrand/ schneider make or equivalent)					
	2x2.5 sq.mm	Mtr.	35.00			
B	**FITTING &ACCESSORIES**					
5	Supplying of light fittings complete set with all accessories as required, with lamp (Havells/HPL/Vinay or Equivalent).					
	Cat No./LUMILINE Plus LED Tube/LUMILINEPLUSBS20WLED865SPCSS, 20W	Each	4.00			
	Cat No. /LED Surface Ceiling Light (Round)/Code-650024,6W	Each	5.00			
	Cat No. /LED Up-Down Wall Light (Indoor)/Code-688576,6W	Each	3.00			
	Cat No./LED Up-Down Wall Light (Outdoor)/Code-680701,6W	Each	1.00			

SN	Description	Unit	Qty	Rate in Nu.		Total Amount (Nu.)
				Figure	Words	
6	Supplying of Installation, Testing and commissioning of prewired call bell 250-volt A.C with base, terminal block and all accessories complete					
	Gong bell assembly	Each	1.00			
7	Supplying of Installation, Testing and commissioning of ceiling fan 240-volt A.C 1400 rpm with all accessories such as down rod, sweep 3 Nos., canopy 2 Nos., condenser and fan body etc. complete as required					
	1200mm sweep	Each	2.00			
8	Supplying of Installation, Testing and commissioning of exhaust fan 240-volt A.C 1400 rpm with all accessories such as frame with arm 3 Nos., sweep 3 Nos., condenser and fan body etc. complete as required					
	300mm sweep	Each	1.00			
9	Providing and supplying, installation, testing and commissioning of 5 star split type, Air conditioning, Hitachi, Panasonic, Samsung or equivalent 1.0 MT, Hot and Cold including wring of cables and associated works such as paintings, testing and commissioning.	Each	1			
C	**CONTROL, SWITCHGEARS**					
10	Supply Installation, testing and commissioning of miniature circuit breaker (MCB) Legrand/ABB/Schneider single pole, 230-volt A.C complete with all accessories suitable to fix on a din bar etc. as required (BSB Approved Make)					
	10A	Each	3.00			
	20A	Each	9.00			

SN	Description	Unit	Qty	Rate in Nu.		Total Amount (Nu.)
				Figure	Words	
11	Supplying Installation, testing and commissioning of panel molded case circuit breaker (MCCB) with electronic release, breaking capacity 25KA, 4 poles 415-volt A.C complete with all accessories etc. as required (BSB Approved Make)					
	32A	Each	1.00			
12	Supply & fixing of residual current circuit breaker (RCCB) 4 pole, sensitivity 100mA, 415-volt A.C complete with all accessories suitable to fix on a din-bar etc. as required (BSB Approved Make)					
	25A	Each	1.00			
13	Supply, Installation, testing and commissioning of TPN distribution board (DIN type, vertical) with acrylic door, 415-volt A.C complete with all accessories without MCB/isolator/RCCB outgoing or incoming etc. as required (BSB Approved Make)					
	4 way	Each	1.00			
14	Providing and fixing of Powder Coated Cubicle Metal Distribution board IP 65, 1.2mx0.6 m approved by engineer in-charge for enclosing the MCB DB Box (distribution board) locking arrangement etc. as required (BSB Approved Make)	Set	1.00			
D	**EARTHING**					
15	Provide and install earthing with GEE slab 5' x 1' x 2" -8 no's connected in series, including 25x4mm GI strip running up to DBs. Manufactured by Druk-Care GEE slab earthing system at Jimena, Thimphu or equivalent. For installation- visit website: www.drukcare.com	Set	1.00			

SN	Description	Unit	Qty	Rate in Nu.		Total Amount (Nu.)
				Figure	Words	
E	**TELEVISION NETWORK**					
16	Supply, Installation, Testing and commissioning Powder coated Telephone Tag Box including with all accessories.					
	Supplying Television Terminal Cabinet (TTC) (SQCA Appd.) as required.	Each	1.00			
17	Supplying & fixing of socket/regulator on existing metal box with fiber sheet cover (recessed or surface) including necessary cutting, connection testing etc.as required.					
	TV coaxial socket	Each	1.00			
18	Supplying and drawing coaxial cable, RG6 in recessed HDPE pipe including necessary cutting, connection, testing etc. as required.	Mtr	10.00			
19	Supplying and fixing of HDPE pipe on recessed including all accessories such as screws, bends, elbows, Tees, corners, etc. complete as required					
	25mm	Mtr	10			
F	**POWER CABLES**					
20	Supplying of 4- Core 1.1KV grade PVC insulated and sheathed Aluminum conductor armored power cables					
	10 sq.mm	Mtr.	105.00			
21	Supplying, Installation, Testing and Commissioning of heavy-duty brass single compression gland for 4- Core 1.1KV grade PVC insulated and sheathed Copper/ Aluminum conductor armored/un-armored power cables					
	25mm Dia, 10sq.mm	Each	2.00			

SN	Description	Unit	Qty	Rate in Nu.		Total Amount (Nu.)
				Figure	Words	
22	Laying of one number PVC insulated and sheathed power cable copper/aluminum, armored/un-armored 1.1KV single core to four core direct in the ground including excavation, sand Cushing, protective covering and refilling the trenches etc. as required					
	Above 6sq.mm to 25sq.mm	Mtr	105.00			
G	**Lighting Arrestor (Supply and Fix)**					
23	25mm Dia 900mm long copper tube four prongs	each	1			
	GI tube with finial base plate with 85x6 mm copper strip ,25mm dia,300mm long.					
H	**Earthing for LA**					
24	Providing and fixing of earthing including all accessories, machinery enclosure, C.I cover plate having locking arrangement, water pipe with excavation and refilling work including charcoal or coke and salt complete required as per standard earthing drawing - With copper earth plate 600x600x3mm.	Sets	1			
25	Providing and drawing wire for loop earthing in existing surface/recessed PVC/MS/ steel conduit or casing capping or wooden batten along with other wires as required - 2.032mm (14 SWG) copper wire.	M	60			
26	Providing and laying earth connection from earth electrodes in 15mm dia. GI pipe from earth electrode as required as per guidance of standard earthing drawing … with 4.06mm Dia (8SWG) copper wire.	M	60			
	Sub Total (Caretakers quarter)					

3. Administrative Block with Classroom

SN	Description	Unit	Qty	Rate in Nu.		Total Amount (Nu.)
				Figure	Words	
A	**WIRING**					
1	Providing & Wiring for light, fans, call bell and 2 pin light socket outlets with 1.5 sq.mm 1.1kV grade, PVC insulated copper conductor cable (RR Kabel/HPL/Havells or equivalent) in recessed HDPE pipe with 6A modular type switch, MS boxes including connections, painting, testing and commissioning etc. as required (Legrand/ schneider make or equivalent)					
	Short Point	Point	7.00			
	Medium point	Point	28.00			
	Long point	Point	29.00			
	Secondary point in series	Each	13.00			
2	Providing & Wiring for 5/6 pin, 6/16 ampere plug point with 4 sq.mm 1.1kV grade, PVC insulated copper conductor cable (RR Kabel/HPL/Havells or equivalent) in recessed HDPE pipe with providing and fixing 5/6 pin, 6/16 ampere socket outlet and switch including earthing the third pin, connections, painting, testing and commissioning etc. as required (Legrand/ schneider make or equivalent)					
	Short Point	point	7.00			
	Medium point	Point	15.00			
	Long point	Point	15.00			

SN	Description	Unit	Qty	Rate in Nu.		Total Amount (Nu.)
				Figure	Words	
3	Providing & Wiring for points in excess length above long points with 1.1kV grade, PVC insulated copper conductor cable (RR Kabel/HPL/Havells or equivalent) in recessed HDPE pipe including connections, painting, testing and commissioning etc. as required (Legrand/ schneider make or equivalent)					
	2x1.5 sq.mm	Mtr	20.00			
	2x4 sq.mm	Mtr.	86.00			
4	Providing & Wiring for lighting circuit and lighting point with 1.1kV grade, PVC insulated copper conductor cable (RR Kabel/HPL/Havells or equivalent) in recessed HDPE pipe including connections, painting, testing and commissioning etc. as required (Legrand/ schneider make or equivalent)					
	2x2.5 sq.mm	Mtr.	158.00			
B	**FITTING AND ACCESSORIES**					
5	Supplying of light fittings complete set with all accessories as required, with lamp (HPL/Vinay/Havells or Equivalent).					
	Cat No. /LUMILINE Plus LED Tube/LUMILINEPLUSBS20WLED865SPCSS, 20W	Each	16.00			
	Cat No./PLUTO PANEL (SURFACE) LED Flat Panel/PLUTOSURFA CE1X1PLS15WLED840S,15W	Each	26.00			
	Cat No. /LED Surface Ceiling Light (Round)/Code-650024,6W	Each	18.00			

SN	Description	Unit	Qty	Rate in Nu.		Total Amount (Nu.)
				Figure	Words	
6	Supplying, Installation, testing and commissioning of ceiling fan 240-volt A.C 1400 rpm with all accessories such as down rod, sweep 3 Nos., canopy 2 Nos., condenser and fan body etc. complete as required					
	1200mm sweep	Each	17.00			
C	**CONTROL, SWITCHGEARS & BUSBAR**					
7	Supplying, Installation, testing and commissioning of panel molded case circuit breaker (MCCB) with electronic release, breaking capacity 25KA, 4 poles 415-volt A.C complete with all accessories etc. as required (BSB Approved Make)					
	100A	Each	1.00			
8	Supply of Installation, Testing and commissioning of miniature circuit breaker (MCB) single pole, 230-volt A.C complete with all accessories suitable to fix on a din-bar etc. as required (BSB Approved Make)					
	10A	Each	3.00			
	20A	Each	18.00			
9	Supply, Installation, Testing and commissioning of residual current circuit breaker (RCCB) 4 pole, sensitivity 100mA, 415-volt A.C complete with all accessories suitable to fix on a din-bar etc. as required (BSB Approved Make)					
	100A	Each	1.00			
10	Supply, Installation, testing and commissioning of TPN distribution board (DIN type, vertical) with acrylic door, 415-volt A.C complete with all accessories without MCB/isolator/RCCB outgoing or incoming etc. as required (BSB Approved Make)					
	8 way	Each	1.00			

SN	Description	Unit	Qty	Rate in Nu.		Total Amount (Nu.)
				Figure	Words	
11	Providing and fixing of Cubicle Metal Distribution board IP 65, 1.2mx0.6 m duly approved by engineer in-charge for enclosing the MCB DB Box IP65 (distribution board) locking arrangement etc. as required (BSB Approved Make)	Set	1.00			
D	**EARTHING**					
12	Provide and install earthing with GEE slab 4' x 1' x 2" -8 no's connected in series, including 25x4mm GI strip running up to DBs. Manufactured by Druk-Care GEE slab earthing system at Jimena, Thimphu or equivalent. For installation- visit website: www.drukcare.com	Set	1.00			
E	**POWER CABLE**					
13	Supplying of 4- Core 1.1KV grade PVC insulated and sheathed Aluminum conductor armored power cables					
	10 sq.mm	Mtr.	30.00			
	Supplying of 4- Core 1.1KV grade PVC insulated and sheathed Aluminum conductor armored power cables					
14	240 sq.mm	Mtr	420.00			
15	Supplying of Installation, Testing and commissioning of heavy-duty brass single compression gland for 4- Core 1.1KV grade PVC insulated and sheathed Copper/ Aluminum conductor armored/un-armored power cables					
	25mm Dia, 10sq.mm	Each	2.00			
16	Laying of one number PVC insulated and sheathed power cable copper/aluminum, armored/un-armored 1.1KV single core to four core direct in the ground including excavation, sand Cushing, protective covering and refilling the trenches etc. as required					

SN	Description	Unit	Qty	Rate in Nu.		Total Amount (Nu.)
				Figure	Words	
	Above 6sq.mm to 25sq.mm	Mtr.	30.00			
F	**TELEVISION NETWORK**					
17	Provide and draw high density polythene insulated & sheathed copper conductor 0.5mm Dia telephone wire in existing surface/ recessed conduit wiring system complete as required					
	2 pair	Mtr	42.00			
18	Supplying & fixing of socket/regulator on existing metal box with fiber sheet cover (recessed or surface) including necessary cutting, connection testing etc.as required.					
	RJ 11 telephone socket	Each	3.00			
19	Supply, Installation, Testing and commissioning Powder coated Telephone Tag Box including with all accessories.					
	Supplying Telephone Terminal Cabinet (TTC) (SQCA Appd.) as required.	Each	1.00			
20	Supplying and fixing of HDPE pipe on recessed including all accessories such as screws, bends, elbows, Tees, corners, etc. complete as required					
	25mm	Mtr	42.00			
21	Supplying & fixing of socket outlet on existing PVC /metal/ molded tough surface box/ metal box (recessed or surface) including necessary cutting, connection testing etc. as required.					
	RJ 45 Computer socket	Each	9.00			
22	Supplying of Cat 6 cable (D-Link, Digi link or equivalent)	Mtr	108.00			
23	Supplying and fixing of HDPE pipe on recessed including all accessories such as screws, bends, elbows, Tees, corners, etc. complete as required					
	25mm	Mtr	72			

SN	Description	Unit	Qty	Rate in Nu.		Total Amount (Nu.)
				Figure	Words	
24	Providing and supplying of 5 star split type Air conditioning, Hitachi or equivalent 1.5 MT, Hot and Cold including wring of cables and associated works such as paintings, testing and commissioning.	Each	12			
G	**Lighting Arrestor (Supply and Fix)**					
25	25mm Dia 900mm long copper tube four prongs	each	1			
	GI tube with finial base plate with 85x6 mm copper strip ,25mm dia,300mm long.					
	Earthing for LA					
26	Providing and fixing of earthing including all accessories, machinery enclosure, C.I cover plate having locking arrangement, water pipe with excavation and refilling work including charcoal or coke and salt complete required as per standard earthing drawing - With copper earth plate 600x600x3mm.	Sets	1			
27	Providing and drawing wire for loop earthing in existing surface/recessed PVC/MS/ steel conduit or casing capping or wooden batten along with other wires as required - 2.032mm (14 SWG) copper wire.	M	60			
28	Providing and laying earth connection from earth electrodes in 15mm dia. GI pipe from earth electrode as required as per guidance of standard earthing drawing … with 4.06mm Dia (8SWG) copper wire.	M	60			
	Sub Total (Administrative Block with Classroom)					

4. Library and Laboratory

SN	Description	Unit	Qty	Rate in Nu.		Total Amount (Nu.)
				Figure	Words	
A	**WIRING**					
1	Providing & Wiring for light, fans, call bell and 2 pin light socket outlets with 1.5 sq.mm 1.1kV grade, PVC insulated copper conductor cable (RR Kabel/HPL/Havells or equivalent) in recessed HDPE pipe with 6A modular type switch, MS boxes including connections, painting, testing and commissioning etc. as required.					
	Short Point	Point	6.00			
	Medium point	Point	9.00			
	Long point	Point	22.00			
	Secondary point in series	Each	20.00			
2	Providing & Wiring for 5/6 pin, 6/16 ampere plug point with 4 sq.mm 1.1kV grade, PVC insulated copper conductor cable (RR Kabel/HPL/Havells or equivalent) in recessed HDPE pipe with providing and fixing 5/6 pin, 6/16 ampere socket outlet and switch including earthing the third pin, connections, painting, testing and commissioning etc. as required					
	Medium point	Point	2.00			
	Long point	Point	13.00			
3	Providing & Wiring for points in excess length above long points with 1.1kV grade, PVC insulated copper conductor cable (RR Kabel/HPL/Havells or equivalent) in recessed HDPE pipe including connections, painting, testing and commissioning etc. as required					
	2x1.5 sq.mm	Mtr	75.00			
	2x4 sq.mm	Mtr.	42.00			

SN	Description	Unit	Qty	Rate in Nu.		Total Amount (Nu.)
				Figure	Words	
4	Providing & Wiring for points in excess length above long points with 1.1kV grade, PVC insulated copper conductor cable (RR Kabel/HPL/Havells or equivalent) in recessed HDPE pipe including connections, painting, testing and commissioning etc. as required (Legrand/ Schneider make or equivalent)					
	2x2.5 sq.mm	Mtr.	84.00			
B	**FITTING AND ACCESSORIES**					
5	Supplying of light fittings complete set with all accessories as required, with lamp (Havells/HPL/Vinay or Equivalent).					
	Cat No. /LUMILINE Plus LED Tube/LUMILINEPLUSBS20WLED865SPCSS, 20W	Each	32.00			
	Cat No./LED Surface Ceiling Light (Round)/Code-650024,6W	Each	6.00			
6	Supplying, installation, testing and commissioning of exhaust fan 240-volt A.C 1400 rpm with all accessories such as frame with arm 3 Nos., sweep 3 Nos., condenser and fan body etc. complete as required					
	300mm sweep	Each	3.00			
7	Supplying, installation, testing and commissioning of ceiling fan 240-volt A.C 1400 rpm with all accessories such as down rod, sweep 3 Nos., canopy 2 Nos., condenser and fan body etc. complete as required					
	1200mm sweep	Each	16.00			
C	**CONTROL, SWITCHGEARS &BUSBAR**					

SN	Description	Unit	Qty	Rate in Nu.		Total Amount (Nu.)
				Figure	Words	
8	Supplying, installation, testing and commissioning of panel molded case circuit breaker (MCCB Legrand/ABB/Schneider) with electronic release, breaking capacity 25KA, 4 poles 415-volt A.C complete with all accessories etc. as required (BSB Approved Make)					
	100A	Each	1.00			
9	Supply of miniature circuit breaker (MCB) single pole, 230-volt A.C complete with all accessories suitable to fix on a din-bar etc. as required (BSB Approved Make)					
	10A	Each	3.00			
	20A	Each	15.00			
10	Supply & fixing of residual current circuit breaker (RCCB) 4 pole, sensitivity 100mA, 415-volt A.C complete with all accessories suitable to fix on a din-bar etc. as required (BSB Approved Make)					
	40A	Each	1.00			
11	Supply of TPN distribution board (DIN type, vertical) with acrylic door, 415-volt A.C complete with all accessories without MCB/isolator/RCCB outgoing or incoming etc. as required (BSB Approved Make)					
	6 way	Each	1.00			
12	Providing and fixing of Cubicle Metal Distribution board IP 65, 1,2mx0.6 m duly approved by engineer in-charge for enclosing the MCB DB Box (distribution board) locking arrangement etc. as required (BSB Approved Make)	Set	1.00			
D	**EARTHING**					

SN	Description	Unit	Qty	Rate in Nu.		Total Amount (Nu.)
				Figure	Words	
13	Provide and install earthing with GEE slab 5' x 1' x 2" -8 no's connected in series, including 25x4mm GI strip running up to Dbs. Manufactured by Druk-Care GEE slab earthing system at Jimena, Thimphu or equivalent. For installation- visit website: www.drukcare.com	Set	1.00			
E	**POWER CABLE**					
14	Supplying of 4- Core 1.1KV grade PVC insulated and sheathed Aluminum conductor armored power cables					
	10 sq.mm	Mtr.	72.00			
15	Supplying of Installation, Testing and commissioning of heavy-duty brass single compression gland for 4- Core 1.1KV grade PVC insulated and sheathed Copper/ Aluminum conductor armored/un-armored power cables					
	25mm Dia, 10sq.mm	Each	2.00			
16	Laying of one number PVC insulated and sheathed power cable copper/aluminum, armored/un-armored 1.1KV single core to four core direct in the ground including excavation, sand Cushing, protective covering and refilling the trenches etc. as required	Mtr.	72.00			
F	**TELEVISION NETWORK**					
25	Provide and draw high density polythene insulated & sheathed copper conductor 0.5mm Dia telephone wire in recessed HDPE pipe wiring system complete as required					
	2 pair	Mtr	15.00			
26	Supplying & fixing of socket/regulator on existing metal box with fiber sheet cover (recessed or surface) including necessary cutting, connection testing etc.as required.					

SN	Description	Unit	Qty	Rate in Nu.		Total Amount (Nu.)
				Figure	Words	
	RJ 11 telephone socket	Each	2.00			
27	Supply, Installation, Testing and commissioning Powder coated Telephone Tag Box including with all accessories.					
	Supplying Telephone Terminal Cabinet (TTC) (SQCA Appd.) as required.	Each	1.00			
28	Supplying and fixing of HDPE pipe on recessed including all accessories such as screws, bends, elbows, Tees, corners, etc. complete as required					
	25mm	Mtr	15.00			
28	Providing and supplying, installation, testing and commissioning of 5 star split type, Air conditioning, Hitachi, Panasonic, Samsung or equivalent 1.5 MT, Hot and Cold including wring of cables and associated works such as paintings, testing and commissioning.	Each	4			
29	25mm Dia 900mm long copper tube four prongs	Each	1			
	GI tube with finial base plate with 85x6 mm copper strip ,25mm dia,300mm long.					
G	**Earthing for LA**					
30	Providing and fixing of earthing including all accessories, machinery enclosure, C.I cover plate having locking arrangement, water pipe with excavation and refilling work including charcoal or coke and salt complete required as per standard earthing drawing - With copper earth plate 600x600x3mm.	Sets	1			
31	Providing and drawing wire for loop earthing in existing surface/recessed PVC/MS/ steel conduit or casing capping or wooden batten along with other wires as required - 2.032mm (14 SWG) copper wire.	M	60			

SN	Description	Unit	Qty	Rate in Nu.		Total Amount (Nu.)
				Figure	Words	
32	Providing and laying earth connection from earth electrodes in 15mm dia. GI pipe from earth electrode as required as per guidance of standard earthing drawing … with 4.06mm Dia (8SWG) copper wire.	M	60			
	Sub Total (Lab or lib)					

5. Classroom 2 Blocks

SN	Description	Unit	Qty	Rate in Nu.		Total Amount (Nu.)
				Figure	Words	
A	**WIRING**					
1	Providing & Wiring for light, fans, call bell and 2 pin light socket outlets with 1.5 sq.mm 1.1kV grade, PVC insulated copper conductor cable (RR Kabel/HPL/Havells or equivalent) in recessed HDPE pipe with 6A modular type switch, MS boxes including connections, painting, testing and commissioning etc. as required (Legrand/ schneider make or equivalent)					
	Short Point	Point	6.00			
	Medium point	Point	56.00			
	Long point	Point	92.00			
2	Providing & Wiring for 5/6 pin, 6/16 ampere plug point with 4 sq.mm 1.1kV grade, PVC insulated copper conductor cable (RR Kabel/HPL/Havells or equivalent) in recessed HDPE pipe with providing and fixing 5/6 pin, 6/16 ampere socket outlet and switch including earthing the third pin, connections, painting, testing and commissioning					

SN	Description	Unit	Qty	Rate in Nu.		Total Amount (Nu.)
				Figure	Words	
	etc. as required (Legrand/ schneider make or equivalent)					
	Short Point	point	12.00			
	Medium point	Point	8.00			
	Long point	Point	32.00			
3	Providing & Wiring for points in excess length above long points with 1.1kV grade, PVC insulated copper conductor cable (RR Kabel/HPL/Havells or equivalent) in recessed HDPE pipe including connections, painting, testing and commissioning etc. as required (Legrand/ schneider make or equivalent)					
	2x1.5 sq.mm	Mtr	34.00			
	2x4 sq.mm	Mtr.	148.00			
4	Providing & Wiring for lighting circuit and lighting point with 1.1kV grade, PVC insulated copper conductor cable (RR Kabel/HPL/Havells or equivalent) in recessed HDPE pipe including connections, painting, testing and commissioning etc. as required (Legrand/ schneider make or equivalent)					
	2x2.5 sq.mm	Mtr.	294.00			
5	Providing & Wiring for sub-main with 1.1kV grade, PVC insulated copper conductor cable (RR Kabel/HPL/Havells or equivalent) in recessed HDPE pipe including connections including connections, painting, testing and commissioning etc. as required (Legrand/ schneider make or equivalent)					
	4x10 sq.mm Cu. Cable	Mtr	82.00			
B	**FITTINGS AND ACCESSORIES**					

SN	Description	Unit	Qty	Rate in Nu.		Total Amount (Nu.)
				Figure	Words	
6	Supplying of light fittings complete set with all accessories as required, with lamp (Havells/HPL/Vinay or Equivalent).					
	Cat No. /LUMILINE Plus LED Tube/LUMILINEPLUSBS20WLED865SPCSS, 20W	Each	72.00			
	Cat No. /LED Surface Ceiling Light (Round)/Code-650024,6W	Each	28.00			
7	Supplying of ceiling fan 240-volt A.C 1400 rpm with all accessories such as down rod, sweep 3 Nos., canopy 2 Nos., condenser and fan body etc. complete as required					
	1200mm sweep	Each	24.00			
C	**CONTROL, SWITCHGEARS**					
8	Supplying, Installation, testing and commissioning of pre-fabricated MS busbar chamber with copper busbar complete with all accessories etc. as required (BSB Approved Make)					
	4 strips, 450mm bar, 100A	Each	2.00			
9	Supplying, Installation, testing and commissioning of panel molded case circuit breaker (MCCB)Legrand/ABB/Schneider with electronic release, breaking capacity 25KA, 4 poles 415-volt A.C complete with all accessories etc. as required (BSB Approved Make)					
	160A	Each	2.00			
10	Supply, Installation, testing and commissioning of miniature circuit breaker (MCB) single pole, 230-volt A.C complete with all accessories suitable to fix on a din-bar etc. as required (BSB Approved Make)					
	10A	Each	12.00			
	20A	Each	36.00			

SN	Description	Unit	Qty	Rate in Nu.		Total Amount (Nu.)
				Figure	Words	
11	Supply, Installation, testing and commissioning of miniature circuit breaker (MCB) triple pole & neutral, 415-volt A.C complete with all accessories suitable to fix on a din-bar etc. as required (BSB Approved Make)					
	25A	Each	4.00			
12	Supply & fixing of residual current circuit breaker (RCCB) 4 pole, sensitivity 100mA, 415-volt A.C complete with all accessories suitable to fix on a din-bar etc. as required (BSB Approved Make)					
	63A	Each	4.00			
13	Suppl, Installation, testing and commissioning of TPN distribution board (DIN type, vertical) with acrylic door, 415-volt A.C complete with all accessories without MCB/isolator/RCCB outgoing or incoming etc. as required (BSB Approved Make)					
	4way	Each	4.00			
14	Providing and fixing of Cubicle Metal Distribution board IP65, 1.2mx0.6 m duly approved by engineer in-charge for enclosing the MCB DB Box (distribution board) locking arrangement etc. as required (BSB Approved Make/higher)	Set	2.00			
D	**EARTHING**					
15	Provide and install earthing with GEE slab 4' x 1' x 2" -8 no's connected in series, including 25x4mm GI strip running up to DBs. Manufactured by Druk-Care GEE slab earthing system at Jimena, Thimphu or equivalent. For installation- visit website: www.drukcare.com	Set	2.00			
E	**POWER CABLE**					

SN	Description	Unit	Qty	Rate in Nu.		Total Amount (Nu.)
				Figure	Words	
16	Supplying of 4- Core 1.1KV grade PVC insulated and sheathed Aluminum conductor armored power cables					
	10 sq.mm	Mtr.	106.00			
	70 Sq.mm	Mtr.	125.00			
17	Supplying, Installation, Testing and Commissioning of end termination with of heavy-duty brass single compression gland for 4- Core 1.1KV grade PVC insulated and sheathed Copper/ Aluminum conductor armored/un-armored power cables completes in all respects					
	25mm Dia, 10sq.mm	each	4.00			
	38mm dia,70 sq.mm	each	4.00			
18	Laying of one number PVC insulated and sheathed power cable copper/aluminium, armored/un-armored 1.1KV single core to four core direct in the ground including excavation, sand Cushing, protective covering and refilling the trenches etc. as required					
	Above 6sq.mm to 25sq.mm	Mtr.	106.00			
	Above 70sq.mm to 150sq.mm	Mtr	125.00			
19	Installation, Testing and Commissioning of end termination with single/double compression gland for PVC insulated and sheathed aluminum/ copper conductor cable of 1.1KV grade including connections etc. as required					
	20/22/25mm Dia	Each	4.00			
20	Providing and supplying installation testing and commissioning of 5 star split type Air conditioning, Hitachi /Panasonic, Samsung or equivalent 1.5 MT, Hot and Cold including wring of cables and associated works such as paintings, testing and commissioning.	Each	20.00			

SN	Description	Unit	Qty	Rate in Nu.		Total Amount (Nu.)
				Figure	Words	
21	25mm Dia 900mm long copper tube four prongs					
	GI tube with finial base plate with 85x6 mm copper strip ,25mm dia,300mm long.	each	2			
F	**Earthing for LA**					
22	Providing and fixing of earthing including all accessories, machinery enclosure, C.I cover plate having locking arrangement, water pipe with excavation and refilling work including charcoal or coke and salt complete required as per standard earthing drawing - With copper earth plate 600x600x3mm.	Sets	2			
23	Providing and drawing wire for loop earthing in existing surface/recessed PVC/MS/ steel conduit or casing capping or wooden batten along with other wires as required - 2.032mm (14 SWG) copper wire.	M	120			
24	Providing and laying earth connection from earth electrodes in 15mm dia. GI pipe from earth electrode as required as per guidance of standard earthing drawing … with 4.06mm Dia (8SWG) copper wire.	M	120			
	Sub Total (Classroom-2 Block)					

6. Multipurpose Hall

SN	Description	Unit	Qty	Rate in Nu.		Total Amount (Nu.)
				Figure	Words	
A	**WIRING**					
1	Providing & Wiring for light, fans, call bell and 2 pin light socket outlets with 1.5 sq.mm 1. 1kV grade, PVC insulated copper conductor cable (RR Kabel/HPL/Havells or equivalent) in recessed					

SN	Description	Unit	Qty	Rate in Nu.		Total Amount (Nu.)
				Figure	Words	
	HDPE pipe with 6A modular type switch, MS boxes including connections, painting, testing and commissioning etc. as required.					
	Short point	Point	3.00			
	Medium point	Point	17.00			
	Long point	Point	24.00			
	Secondary point in series	Each	16.00			
2	Providing & Wiring for 5/6 pin, 6/16 ampere plug point with 4 sq.mm 1.1kV grade, PVC insulated copper conductor cable (RR Kabel/HPL/Havells or equivalent) in recessed HDPE pipe with providing and fixing 5/6 pin, 6/16 ampere socket outlet and switch including earthing the third pin, connections, painting, testing and commissioning etc. as required.					
	Medium point	Point	11.00			
	Long point	Point	18.00			
3	Providing & Wiring for points in excess length above long points with 1.1kV grade, PVC insulated copper conductor cable (RR Kabel/HPL/Havells or equivalent) in recessed HDPE pipe including connections, painting, testing and commissioning etc. as required.					
	2x1.5 sq.mm	Mtr	105.00			
	2x4 sq.mm	Mtr.	140.00			
4	Providing & Wiring for lighting circuit and lighting point with 1.1kV grade, PVC insulated copper conductor cable (RR Kabel/HPL/Havells or equivalent) in recessed HDPE pipe including connections, painting, testing and commissioning					

SN	Description	Unit	Qty	Rate in Nu.		Total Amount (Nu.)
				Figure	Words	
	etc. as required (Legrand/ schneider make or equivalent)					
	2x2.5 sq.mm	Mtr.	316.00			
5	Providing & Wiring for sub-main with 1.1kV grade, PVC insulated copper conductor cable (RR Kabel/HPL/Havells or equivalent) in recessed HDPE pipe including connections including connections, painting, testing and commissioning etc. as required					
	4x10 sq.mm Cu. Cable	Mtr	45.00			
B	**FITTING AND ACCESSORIES**					
6	Supplying of light fittings complete set with all accessories as required, with lamp (Havells/HPL/Vinay or Equivalent).					
	Cat No. /LED Surface Ceiling Light (Round)/Code-650024,6W	Each	19.00			
	Cat No. /LED Up-Down Wall Light (Outdoor)/Code-680701,6W	Each	8.00			
	Cat No./LUMILINE Plus LED Tube/LUMILINEPLUSBS20WLED865SPCSS, 20W	Each	3.00			
	Cat No./Surround II/LHB11-70-CDL,70W circular LED highbay light Type -II	Each	20.00			
7	Supplying Installation, testing and commissioning of wall Fan-Anchor/Cindrella or Equivalent -wall-14022,300mm sweep	Each	8.00			
8	Supplying of ceiling fan 240-volt A.C 1400 rpm with all accessories such as down rod, sweep 3 Nos., canopy 2 Nos., condenser and fan body etc. complete as required BSB Approved make or Higher					
	1200mm sweep	Each	2.00			
C	**CONTROL, SWITCHGEARS & BUSBAR**					

SN	Description	Unit	Qty	Rate in Nu.		Total Amount (Nu.)
				Figure	Words	
9	Supplying, Installation, testing and commissioning of pre-fabricated MS busbar chamber with copper busbar complete with all accessories etc. as required (BSB Approved Make or Higher)					
	4 strips, 450mm bar, 100A	Each	1.00			
10	Supplying, Installation, testing and commissioning of panel molded case circuit breaker (MCCB) with electronic release, breaking capacity 25KA, 4 poles 415-volt A.C complete with all accessories etc. as required (BSB Approved Make or higher)					
	100A	Each	1.00			
11	Supply, Installation, testing and commissioning of miniature circuit breaker (MCB) single pole, 230-volt A.C complete with all accessories suitable to fix on a dinbar etc. as required (BSB Approved Make or higher)					
	6A		4.00			
	16A	Each	21.00			
12	Supply, Installation, testing and commissioning of miniature circuit breaker (MCB) triple pole & neutral, 415-volt A.C complete with all accessories suitable to fix on a din-bar etc. as required (BSB Approved Make)					
	25A	Each	1.00			
	32A	Each	1.00			
13	Supply Installation, testing and commissioning of residual current circuit breaker (RCCB) 4 pole, sensitivity 100mA, 415-volt A.C complete with all accessories suitable to fix on a din-bar etc. as required (BSB Approved Make)					
	25A	Each	1.00			
	40A	Each	1.00			

SN	Description	Unit	Qty	Rate in Nu.		Total Amount (Nu.)
				Figure	Words	
14	Supply, Installation, testing and commissioning of TPN distribution board (DIN type, vertical) with acrylic door, 415-volt A.C complete with all accessories without MCB/isolator/RCCB outgoing or incoming etc. as required (BSB Approved Make)					
	4 way	Each	1.00			
	6 way	Each	1.00			
15	Providing and fixing of Cubicle Metal Distribution board IP 65, 1.2mx0.6 m duly approved by engineer in-charge for enclosing the MCB DB Box (distribution board) locking arrangement etc. as required (BSB Approved Make)	Set	1.00			
D	**EARTHING**					
16	Provide and install earthing with GEE slab 5' x 1' x 2" -8 no's connected in series, including 25x4mm GI strip running up to DBs. Manufactured by Druk-Care GEE slab earthing system at Jimena, Thimphu or equivalent. For installation- visit website: www.drukcare.com	Set	1.00			
E	**POWER CABLE**					
17	Supplying of 4- Core 1.1KV grade PVC insulated and sheathed Aluminum conductor armored power cables					
	16 sq.mm	Mtr.	70.00			
18	Supplying, Installation, testing and commissioning of heavy-duty brass single compression gland for 4-Core 1.1KV grade PVC insulated and sheathed Copper/ Aluminum conductor armored/un-armored power cables					
	27mm Dia, 16sq.mm	Each	2.00			
19	Laying of one number PVC insulated and sheathed power cable copper/aluminium, armored/un-					

SN	Description	Unit	Qty	Rate in Nu.		Total Amount (Nu.)
				Figure	Words	
	armored 1.1KV single core to four core direct in the ground including excavation, sand Cushing, protective covering and refilling the trenches etc. as required					
	Above 6sq.mm to 25sq.mm	Mtr	70.00			
20	Providing and supplying of 5 star split type Air conditioning, Hitachi /Panasonic, Samsung or BSB approved/ equivalent 1.5 MT, Hot and Cold including wring of cables and associated works such as paintings, testing and commissioning.	Each	8			
F	**Lighting Arrestor (Supply and Fix)**					
21	25mm Dia 900mm long copper tube four prongs	Each	1			
	GI tube with finial base plate with 85x6 mm copper strip ,25mm dia,300mm long.					
G	**Earthing for LA**					
22	Providing and fixing of earthing including all accessories, machinery enclosure, C.I cover plate having locking arrangement, water pipe with excavation and refilling work including charcoal or coke and salt complete required as per standard earthing drawing - With copper earth plate 600x600x3mm.	Sets	1			
23	Providing and drawing wire for loop earthing in existing surface/recessed PVC/MS/ steel conduit or casing capping or wooden batten along with other wires as required - 2.032mm (14 SWG) copper wire.	M	60			
24	Providing and laying earth connection from earth electrodes in 15mm dia. GI pipe from earth electrode as required as per guidance of standard earthing drawing … with 4.06mm Dia (8SWG) copper wire.	M	60			
	Sub Total (MPH)					

7. Toilet for Boys and Girls

SN	Description	Unit	Qty	Rate in Nu.		Total Amount (Nu.)
				Figure	Words	
A	**WIRING**					
1	Providing & Wiring for light, fans, call bell and 2 pin light socket outlets with 1.5 sq.mm 1.1kV grade, PVC insulated copper conductor cable (RR Kabel/HPL/Havells or equivalent) in recessed HDPE pipe with 6A modular type switch, MS boxes including connections, painting, testing and commissioning etc. as required					
	Short Point	Point	7.00			
	Medium point	Point	26.00			
	Long point	Point	4.00			
2	Providing Wiring for lighting circuit and lighting point with 1.1kV grade, PVC insulated copper conductor cable (RR Kabel/HPL/Havells or equivalent) in recessed HDPE pipe including connections, painting, testing and commissioning etc. as required					
	2x2.5 sq.mm	Mtr.	80.00			
B	**FITTING &ACCESSORIES**					
3	Supplying of light fittings complete set with all accessories as required, with lamp (HPL/Vinay/Havells or Equivalent).					
	Cat No. LED Surface Ceiling Light (Round)/Code-650024,6W	Each	24.00			
	Cat No. LED Up-Down Wall Light (Outdoor)/Code-680701,6W	Each	6.00			
C	**CONTROL SWITCHGEARS & BUSBAR**					
4	Supply, Installation, testing and commissioning of miniature circuit breaker (MCB) single pole, 230-					

SN	Description	Unit	Qty	Rate in Nu.		Total Amount (Nu.)
				Figure	Words	
	volt A.C complete with all accessories suitable to fix on a dinbar etc. as required (BSB Approved Make)					
	10A	Each	2.00			
5	Supply, Installation, testing and commissioning of miniature circuit breaker (MCB) double pole, 230-volt A.C complete with all accessories suitable to fix on a din-bar etc. as required (BSB Approved Make)					
	20A	Each	2.00			
6	Supply & fixing of residual current circuit breaker (RCCB) double pole, sensitivity 100mA, 230-volt A.C complete with all accessories suitable to fix on a din-bar (BSB Approved Make)					
	16A	Each	2.00			
7	Supply, Installation, testing and commissioning of SPN distribution board (DIN type) with acrylic door, 230-volt A.C complete with all accessories without MCB/isolator/RCCB outgoing orincoming etc. as required (BSB Approved Make)					
	6way	Each	2.00			
8	Providing and fixing of Cubicle Metal Distribution board IP 65, 1.2mx0.6 m duly approved by engineer in-charge for enclosing the MCB DB Box (distribution board) locking arrangement etc. as required (BSB Approved Make)	Set	2.00			
D	**EARTHING**					
9	Provide and install earthing with GEE slab 5' x 1' x 2" -8 no's connected in series, including 25x4mm GI strip running up to DBs. Manufactured by Druk-Care GEE slab earthing system at Jimena, Thimphu or equivalent. For installation- visit website: www.drukcare.com	Set	1.00			
E	**POWER CABLE**					

SN	Description	Unit	Qty	Rate in Nu.		Total Amount (Nu.)
				Figure	Words	
10	Supplying of 2- Core 1.1KV grade PVC insulated and sheathed Aluminum conductor armored power cables					
	4 sq.mm	Mtr.	104.00			
11	Supplying, Installation, testing and commissioning of heavy-duty brass single compression gland for 2-Core 1.1KV grade PVC insulated and sheathed Copper/ Aluminum conductor armored/un-armored power cables					
	20mm Dia, 4sq.mm	Each	2.00			
12	Laying of one number PVC insulated and sheathed power cable copper/aluminum, armored/un-armored 1.1KV single core to four core direct in the ground including excavation, sand Cushing, protective covering and refilling the trenches etc. as required					
	Up to 6sq.mm	Mtr	104.00			
	Sub Total (Toilet Boys and Girls)					

8. Kitchen

SN	Description	Unit	Qty	Rate in Nu.		Total Amount (Nu.)
				Figure	Words	
A	**WIRING**					
1	Providing & Wiring for light, fans, call bell and 2 pin light socket outlets with 1.5 sq.mm 1.1kV grade, PVC insulated copper conductor cable (RR Kabel/HPL/Havells or equivalent) in recessed HDPE pipe with 6A modular type switch, MS boxes including connections, painting, testing and commissioning etc. as required.					
	Short Point	Point	7.00			

SN	Description	Unit	Qty	Rate in Nu.		Total Amount (Nu.)
				Figure	Words	
	Medium point	Point	18.00			
	Long point	Point	2.00			
2	Providing Wiring for lighting circuit and lighting point with 1.1kV grade, PVC insulated copper conductor cable (RR Kabel/HPL/Havells or equivalent) in recessed HDPE pipe including connections, painting, testing and commissioning etc. as required					
	2x2.5 sq.mm	Mtr.	40.00			
3	Providing & Wiring for 5/6 pin, 6/16 ampere plug point with 4 sq.mm 1.1kV grade, PVC insulated copper conductor cable (RR Kabel/HPL/Havells or equivalent) in recessed HDPE pipe with providing and fixing 5/6 pin, 6/16 ampere socket outlet and switch including earthing the third pin, connections, painting, testing and commissioning etc. as required					
	Short Point	point	2.00			
	Medium point	Point	2.00			
	Long point	Point	2.00			
B	**FITTING &ACCESSORIES**					
4	Supplying of LED tube 20W light fittings complete set with all accessories as required, with lamp (HPL/Vinay/Havells or Equivalent).	Each	13.00			
5	Supplying of Installation, Testing and commissioning of ceiling fan 240-volt A.C 1400 rpm with all accessories such as down rod, sweep 3 Nos., canopy 2 Nos., condenser and fan body etc. complete as required					
	1200mm sweep	Each	7.00			

SN	Description	Unit	Qty	Rate in Nu.		Total Amount (Nu.)
				Figure	Words	
6	Supplying of Installation, Testing and commissioning of exhaust fan 240-volt A.C 1400 rpm with all accessories such as frame with arm 3 Nos., sweep 3 Nos., condenser and fan body etc. complete as required					
	450 mm sweep	Each	1.00			
C	**CONTROL SWITCHGEARS & BUSBAR**					
7	Supply, Installation, testing and commissioning of miniature circuit breaker (MCB) single pole, 230-volt A.C complete with all accessories suitable to fix on a dinbar etc. as required (BSB Approved Make)					
	6A	Each	2.00			
8	Supply, Installation, testing and commissioning of miniature circuit breaker (MCB) double pole, 230-volt A.C complete with all accessories suitable to fix on a din-bar etc. as required (BSB Approved Make)					
	32A	Each	1.00			
9	Supply & fixing of residual current circuit breaker (RCCB) double pole, sensitivity 100mA, 230-volt A.C complete with all accessories suitable to fix on a din-bar (BSB Approved Make)					
	32A	Each	1.00			
10	Supply, Installation, testing and commissioning of SPN distribution board (DIN type) with acrylic door, 230-volt A.C complete with all accessories without MCB/isolator/RCCB outgoing or incoming etc. as required (BSB Approved Make)					
	4way	Each	1.00			
11	Providing and fixing of Cubicle Metal Distribution board IP 65, 1.2mx0.6 m duly approved by engineer in-charge for enclosing the MCB DB Box	Set	1.00			

SN	Description	Unit	Qty	Rate in Nu.		Total Amount (Nu.)
				Figure	Words	
	(distribution board) locking arrangement etc. as required (BSB Approved Make)					
D	**EARTHING**					
12	Provide and install earthing with GEE slab 5' x 1' x 2" -8 no's connected in series, including 25x4mm GI strip running up to DBs. Manufactured by Druk-Care GEE slab earthing system at Jimena, Thimphu or equivalent. For installation- visit website: www.drukcare.com	Set	1.00			
E	**POWER CABLE**					
13	Supplying of 2- Core 1.1KV grade PVC insulated and sheathed Aluminum conductor armored power cables					
	10 sq.mm	Mtr.	52.00			
14	Supplying, Installation, testing and commissioning of heavy-duty brass single compression gland for 2-Core 1.1KV grade PVC insulated and sheathed Copper/ Aluminum conductor armored/un-armored power cables					
	20mm Dia, 4sq.mm	Each	2.00			
15	Laying of one number PVC insulated and sheathed power cable copper/aluminium, armored/un-armored 1.1KV single core to four core direct in the ground including excavation, sand Cushing, protective covering and refilling the trenches etc. as required					
	Up to 6sq.mm	Mtr	52.00			
	Sub Total (Kitchen)					

9. Compound Lighting

SN	Description	Unit	Qty	Rate in Nu.		Total Amount (Nu.)
				Figure	Words	
1	Providing and fixing 1.1kV grade PVC insulated copper conductor from fittings to marshalling box:					
	P/D 2x2.5 Sq.mm 1.1kVG PVC insul. copper condr.	Mtr	484.00			
2	Providing and laying of HDPE pipe for incoming and outgoing line for compound light post					
	32mm dia HDPE conduit pipe	Mtr	75.00			
3	Providing and laying of 1.1kV grade PVC insulated and sheathed (PVC I&S), armored underground aluminium cable (AUGC) in the cable trench 500x1000deep with necessary sand bed, required size of thimbles and cable gland, etc. for compound light post					
	6Sq.mm 2core PVC I&S, AUGC	Mtr	1,338.00			
	25Sq.mm 4core PVC I&S, AUGC	Mtr	18.00			
	50Sq.mm 4core PVC I&S, AUGC	Mtr	175.00			
	35Sq.mm 4core PVC I&S, AUGC	Mtr	160.00			
4	Compound light					
	Providing and fixing 70W Slim LED Flood Light on the poles with base plate 250x250x5.4mm, entry hole of 40mm dia 1.1m from bottom and strude bolt as earth terminal complete as required and other required accessories to make the set complete. IP65	set	8.00			
	Providing and fixing 3x8 W COB LED POLE LAMP, and other required accessories to make the set complete.	set	67.00			
5	Providing & fixing Four pole MCBs & DBs					
	2 pole MCB: 32A & 4way SPN DB	set	3.00			
6	Earthing's					

SN	Description	Unit	Qty	Rate in Nu.		Total Amount (Nu.)
				Figure	Words	
	Provide and installing earthing with 20mm x1800mm GI spike including 8 or 10mm dia GI nuts and bolts, 3m long 2.5 Sq.mm bare copper conductor.	set	78.00			
7	Switch Gear Stand					
	Switch gear stands with RCC 1000x500x1200mm (ratio 1:2:4) IP 65 Cubicle ISO Certified BSB Approved make	no	3.00			
8	Switch Gear Boxes					
	Providing & fixing feeder pillar of Powder coated MS sheet metal box 1000mm long 500mm wide 1200mm high (external) with fitted in busbars and to house in meters, Main Switches, timer switch and any other auxiliaries as per ISO certified/IP65 BSB approved Make	no	3.00			
9	MCCB (Legrand /ABB/Schneider)					
	Providing & fixing 4pole MCCB, 100A,415V, 25KA breaking capacity	no	1.00			
	Providing & fixing 4pole MCCB, 160A,415V, 36KA breaking capacity	no	1.00			
	Providing & fixing 4pole MCCB, 125A,415V, 25KA breaking capacity	no	1.00			
10	Timer switch and contactor					
	Supply and fixing of Street light Pillars with electronic timer switch double pole,7days/24hrs, 50Hz, sensitivity 30mA, 230-volt A.C complete with all accessories suitable to to fix on a din-bar etc. as required BSB Approved make or higher	no	3.00			
	Supply and fixing of 32A 3 pole contactor, 440V with single phase solenoid coil	no	3.00			

SN	Description	Unit	Qty	Rate in Nu.		Total Amount (Nu.)
				Figure	Words	
	Supply and fixing of 250x180x100 metal box with din bar and hinged, lockable cover.	no	3.00			
11	Supplying and fixing of CT energy meter (approved by BPC)	set	1.00			
	Sub Total (Compound Lighting)					

IV. Occupational Health and Safety (OHS)

SN	Description	Unit	Qty	Rate in Nu.		Total Amount (Nu.)
				Figure	Words	
1	Incorporation of Occupational Health and Safety measures at construction sites as per the attached requirements list. The standards and specifications for the Insurance, OHS materials and (or) equipment shall be in compliance with the Labor and Employment Act - 2007, Regulation on Occupational Health, Safety and Welfare - 2012, and other relevant national documents. All OHS items will remain as the property of the bidder upon completion of the project.	LS	1			
2	Providing temporary living accommodation which includes bedroom, kitchen, and toilet cum bathroom including proper water supply and electricity as per the drawing and temporary living accommodation standards. The accommodation facilities must be dismantled and cleaned upon the completion of project. All reusable materials of the accommodation facilities will remain as the property of the bidder upon completion of the project.	LS	1			
	Sub Total (OHS)					
	GRAND TOTAL					

In Words:

SECTION VIIB- CONTRACT FORMS

Applicable Forms from this Contract Forms section will either be submitted by the successful Bidder or by KHPL, post award of Contract.

Form 16: Letter of Award of Contract

Reference No. .....

Date.....

To
[Name and Address of the Contractor]

Dear Sirs,

This is to notify you that your Bid dated..... for execution of the .....

..... *[Name of the Contract and Tender No., as given in ITB]* for the Contract Price of ..... *[Amount in Nu both in words and figures as corrected and modified in accordance with the ITB]* is hereby accepted by KHPL.

You are hereby requested to furnish Contract Performance Security, in the form detailed in**Error! Reference source not found.**for an amount of .....*[insert amount of Performance Security]*..... within thirty (30) days of the receipt of this Letter of Award and the validity of the Contract Performance Security shall be up to .....*[insert validity]*.....

Failure to submit the Contract Performance Security shall constitute a ground for the annulment of the award and entail forfeiture of Bid Security.

In case of differential security as per ITB33.6, you are hereby requested to furnish the additional differential security in addition to Performance Security, in the form detailed in GCC.18 for an amount of ……. (insert amount of Differential security)…..within thirty (30) days of the receipt of this Letter of Award and the validity of the Contract Performance Security shall be up to .....*[insert validity]*.....

This letter is being issued to you in duplicate. Please retain one copy for your records and return the other copy to KHPL after recording on the letter "Accepted Unconditionally" under the signature of the authorised signatory.

Please acknowledge receipt.

Yours faithfully,

Signature

[Name and title of signatory]

[KHPL's address]

Form 17: Contract Agreement

(ON NON JUDICIAL STAMP PAPER OF APPROPRIATE VALUE)

This agreement is made on this _____ (day, month, year) by and between Khorlochhu Hydro Power Limited , a Company registered under _____(insert the relevant statutory act under which the company was incorporated)_____ and having its Registered Office at _____ (Address of KHPL) (hereinafter referred to as "KHPL") which expression shall unless repugnant to the context or meaning thereof include its successors and assigns of the one part

AND

_____(Name of Contractor or Joint Venture), a Company registered& and existing under the laws of Bhutan and having its registered office at _____ (please enter the Addresses of the Contractor or each of the Partners in case of Joint Venture) _____ _____ (hereinafter to be collectively referred to for the sake of convenience as "the Contractor") which expression shall unless repugnant to the context or meaning thereof include their respective successors and permitted assigns of the other part.

Whereas KHPL is desirous that the Contractor executes the Contract No. _____ _____ (name and identification number of the Contract) for ----------(hereinafter called the "Works") and KHPL has accepted the Bid submitted by the Contractor for the execution and completion of such Works and the remedying of any defects therein, at a Contract Price of _____ (price in Nu both in words and figures).

NOW THIS AGREEMENT WITNESSETH as follows:

1. In this Agreement, words and expression shall assume the same meanings as are respectively assigned to them in the General Conditions of Contract hereinafter referred to and they shall be deemed to form and be read and construed as part of this Agreement.

2. In consideration of the payments to be made by KHPL to the Contractor as hereinafter mentioned, the Contractor hereby covenants with KHPL to execute and complete the Works and remedy the defects therein in conformity in all aspects with the provisions of Contract and shall not in any manner dilute the responsibilities, obligations and liabilities as defined in the said Contract to ensure completion and performance of the Works within the Time for Completion (in case of Joint Venture, the respective responsibilities, obligations, and liabilities of each of the partners of the Joint Venture as well as of the Leader of the JV in respect of execution shall be performed as laid under "The Joint And Several Responsibility And Liability Provisions" therein under the Contract).

3. KHPL hereby covenants to pay the Contractor in consideration of the execution and completion of the Works and in the remedying the defects therein the Contract Price or such other sum as may become payable under the provisions of the Contract at the times and in the manner prescribed by the Contract.

4. The following documents shall be deemed to form and be read and construed as part of this Agreement :
   - i) Contract Agreement
   - ii) Letter of Acceptance
   - iii) Special Conditions of Contract
   - iv) General Conditions of Contract
   - v) Bill of Quantities
   - vi) Technical Specifications
   - vii) Drawings
   - viii) Contractor's Bid
   - ix) Any other documents listed in the SCC as forming part of the Contract.

Khorlochhu Hydro Power Ltd.

In witness whereof the parties have caused this Agreement to be executed on the day, month, and year first written before.
The Common Seal of both the Parties is hereunto affixed in the presence of:

Signed Sealed and Delivered by the said Parties.

(Signature)
(Name and Title of Signatory)
(Name of Employer)

(Signature)
(Name and Title of Signatory)
(Name of Contractor)

In the presence of:
WITNESSES:

1. (Signature)
(Name & Address)

2. (Signature)
(Name & Address)

Form 18: Bank Guarantee for Contract Performance Security

[To be provided on the relevant legal document, as per applicable law, in the country of execution]

[The bank/successful Bidder providing the Guarantee shall fill in this form in accordance with the instructions indicated in brackets.]

[bank's name, and address of issuing branch or office]

Beneficiary: [name and address of Employer]
Date: [date]

PERFORMANCE GUARANTEE No.: [Performance Guarantee number]

We have been informed that [name of Contractor] (hereinafter called "the Contractor") has entered into Contract No. [reference number of the Contract] dated [date of Contract] with you, for the execution of [name of Contract and brief description of Works] (hereinafter called "the Contract").

Furthermore, we understand that, according to the conditions of the Contract, a performance guarantee is required.

At the request of the Contractor, we [name of Bank] hereby irrevocably undertake to pay you any sum or sums not exceeding in total an amount of [amount in figures] ([amount in words])[1], such sum being payable in the types and proportions of currencies in which the Contract Price is payable, upon receipt by us of your first demand in writing accompanied by a written statement stating that the Contractor is in breach of its obligation(s) under the Contract, without you needing to prove or to show grounds for your demand or the sum specified therein.

This guarantee shall expire no later than 30 days from the date of issuance of the Certificate of Completion, calculated based on a copy of such Certificate which shall be provided to us, or on the [number] day of [month], [year][2], whichever occurs first. Consequently, any demand for payment under this guarantee must be received by us at this office on or before that date. The Guarantor agrees to a one-time extension of this Guarantee for a period not to exceed [6 months][1 year], in response to the Employer's written request for such extension, such request to be presented to the Guarantor before the expiry of the Guarantee.

_____

[signature(s) of an authorized representative(s) of the bank]

The Guarantor (bank) shall insert an amount representing the percentage of the Contract Price specified in the Contract and denominated either in the currency(ies) of the Contract or a freely convertible currency acceptable to the Employer.

[2] Insert the date 30 days after the expected Completion date. The Employer should note that in the event of an extension of the time for completion of the Contract, the Employer would need to request an extension of this Guarantee from the Guarantor. Such request must be in writing and must be made prior to the expiration date established in the Guarantee.

Form 19: Bank Guarantee for Advance Payment

The bank/successful Bidder providing the Guarantee shall fill in this form in accordance with the instructions indicated in brackets.

[bank's name, and address of issuing branch or office]
Beneficiary: [name and address of Employer]
Date: [date]

ADVANCE PAYMENT GUARANTEE No.: [number]

We have been informed that [name of Contractor] (hereinafter called "the Contractor") has entered into Contract No. [reference number of the contract] dated [date of Contract] with you, for the execution of [name of contract and brief description of Works] (hereinafter called "the Contract").

Furthermore, we understand that, according to the conditions of the Contract, an advance payment is to be made against an advance payment guarantee in the sum or sums indicated below.

At the request of the Contractor, we [name of Bank] hereby irrevocably undertake to pay you any sum or sums not exceeding in total an amount of [amount in figures] ([amount in words][3]) upon receipt by us of your first demand in writing accompanied by a written statement stating that the Contractor is in breach of its obligation under the Contract because the Contractor used the Advance Payment for purposes other than the costs of mobilization in respect of the Works.

It is a condition for any claim and payment under this guarantee to be made that the Advance Payment referred to above must have been received by the Contractor in its account number [account number] at [name and address of Bank].

The maximum amount of this guarantee shall be progressively reduced by the amount of the Advance Payment repaid by the Contractor as indicated in copies of interim statements or payment certificates which shall be presented to us. This guarantee shall expire, at the latest, upon our receipt of a copy of the Interim Payment Certificate indicating that eighty percent (80%) of the Contract Price has been certified for payment, or on the [number] day of [month], [year][4], whichever is earlier. Consequently, any demand for payment under this guarantee must be received by us at this office on or before that date. We agree to a one-time extension of this guarantee for a period not to exceed [6 months][1 year], in response to the Employer's written request for such extension, such request to be presented to us before the expiry of the guarantee.

_____

[insert signature(s) of authorized representative(s) of bank]

[3] The Guarantor shall insert an amount representing the amount of the Advance Payment and denominated either in the currency(ies) of the Advance Payment as specified in the Contract, or in a freely convertible currency acceptable to the Employer.
[4] Insert the expected expiration date of the Time For Completion. The Employer should note that in the event of an extension of the Time For Completion of the Contract, the Employer would need to request an extension of this guarantee from the Guarantor. Such request must be in writing and must be made prior to the expiration date established in the guarantee.

CONSTRUCTION DRAWINGS

ARCHITECTURAL DRAWINGS

MASTER PLAN

Owner - Khorlochhu Hydro Power Limited
Location - Doksum New Township, Trashiyangtse

Khorlochhu

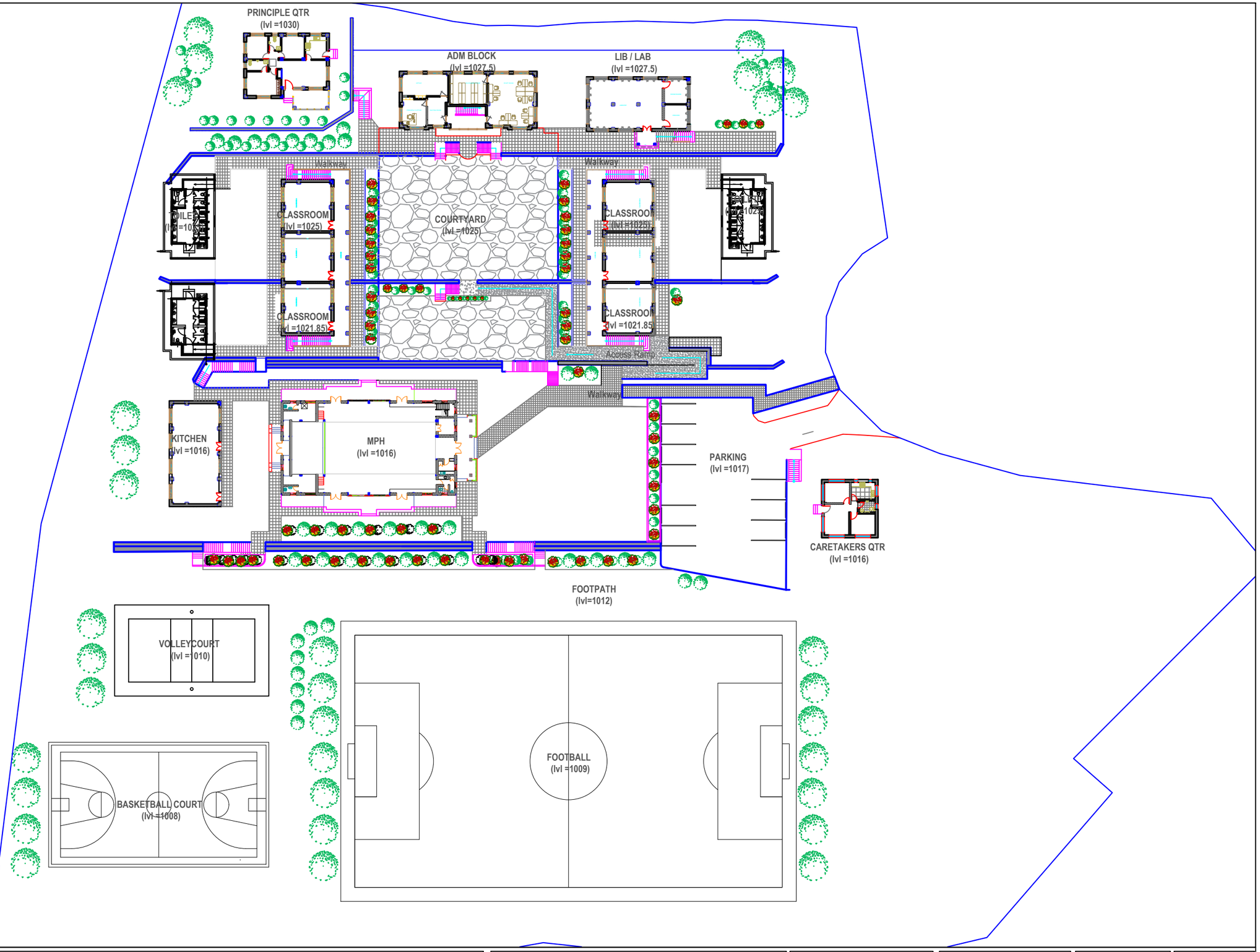

Khorlochhu

ARCHITECTURAL DRAWING

PROJECT TITLE	DRAWING TITLE
Construction of Doksum Primary School	MASTER_PLAN

NOTES

1. ALL DIMENSIONS ARE IN MILLIMETER & ELEVATION IN METER UNLESS SPECIFIED OTHERWISE.
2. ALL DIMENSIONS MEASURE UNFINISHED SURFACES UNLESS SPECIFIED OTHERWISE.
3. DIMENSIONS ARE TO BE READ AND NOT SCALED OFF.
4. ANY DISCREPANCIES IN THE DRAWING ARE TO BE BROUGHT TO THE IMMEDIATE NOTICE OF THE SUPERVISION TEAM.

CHECKED	APPROVED	DATE	DRAWING NO.
			AR_01
		MARCH, 2026	SCALE
			NTS

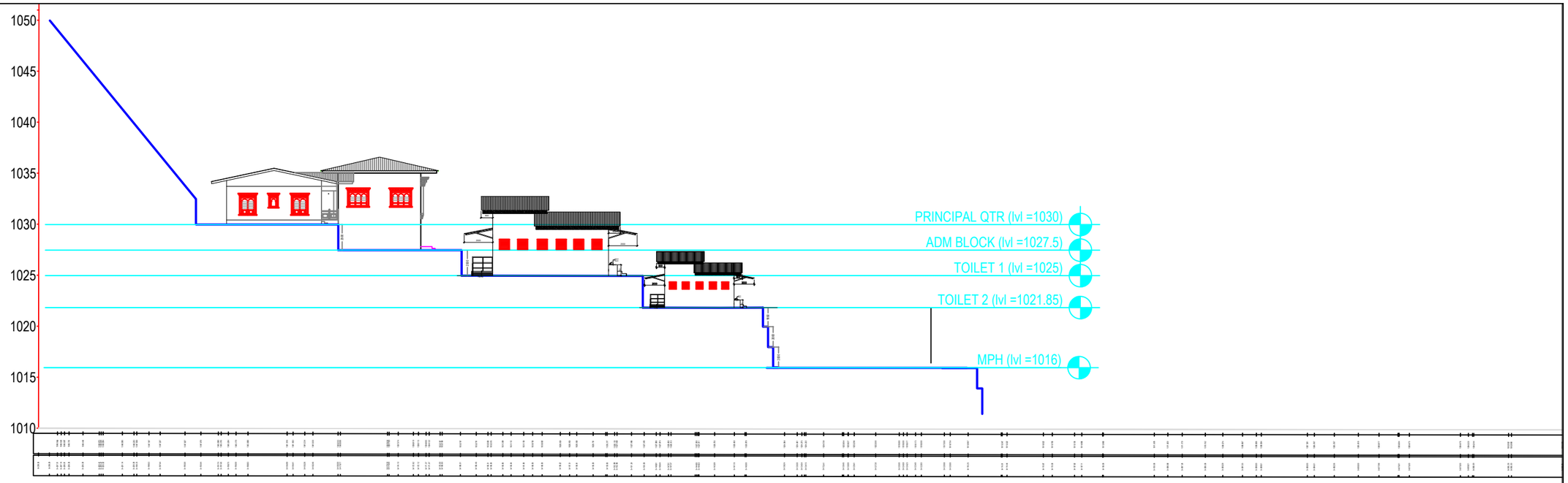

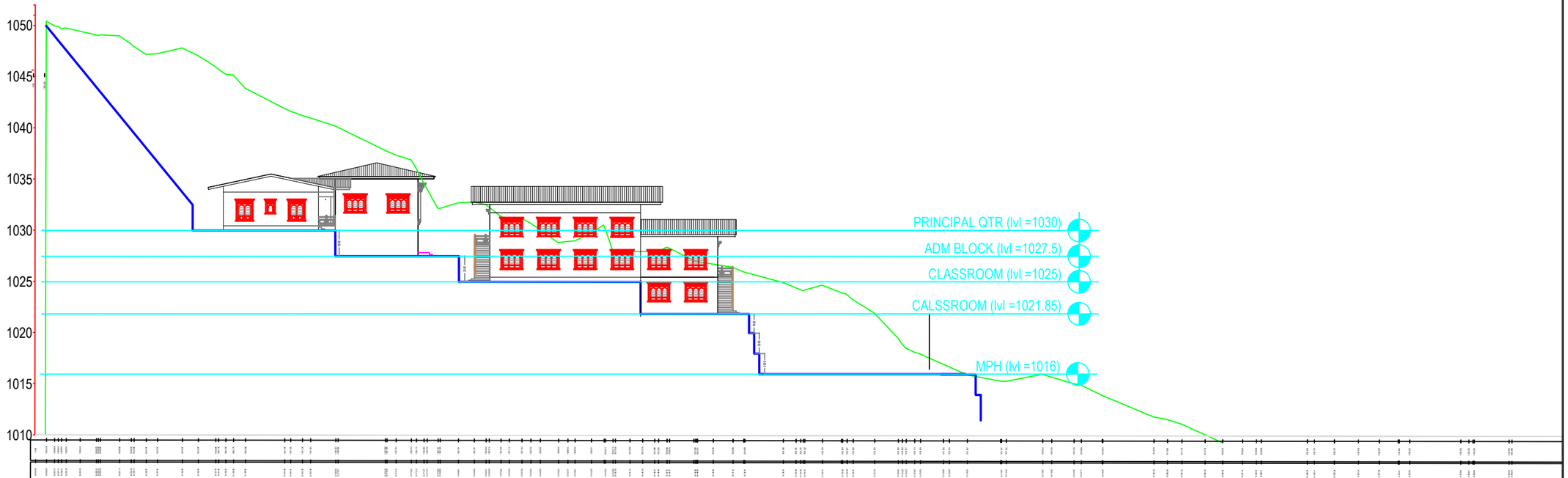

SECTION TOWARD HILL SIDE

Khorlochhu

ARCHITECTURAL DRAWING

PROJECT TITLE	DRAWING TITLE
Construction of Doksum Primary School	AS_STATED_IN_THE_DRAWING

NOTES

1. ALL DIMENSIONS ARE IN MILLIMETER & ELEVATION IN METER UNLESS SPECIFIED OTHERWISE.
2. ALL DIMENSIONS MEASURE UNFINISHED SURFACES UNLESS SPECIFIED OTHERWISE.
3. DIMENSIONS ARE TO BE READ AND NOT SCALED OFF.
4. ANY DISCREPANCIES IN THE DRAWING ARE TO BE BROUGHT TO THE IMMEDIATE NOTICE OF THE SUPERVISION TEAM.

CHECKED	APPROVED	DATE	DRAWING NO.
			AR_02
		MARCH, 2026	SCALE
			NTS

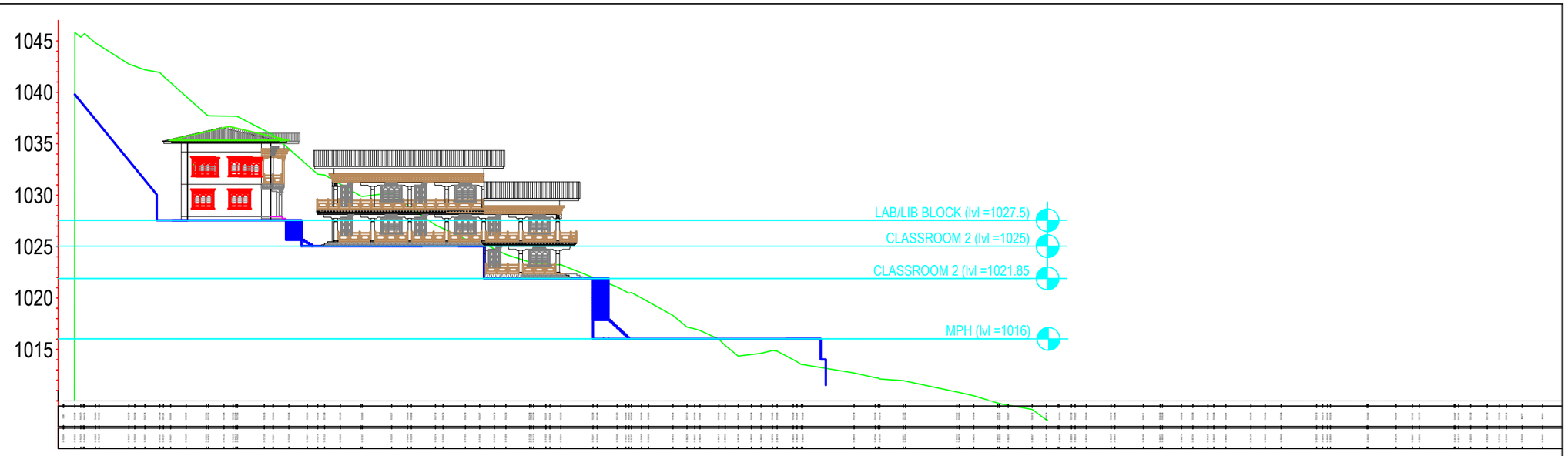

MID_SECTION

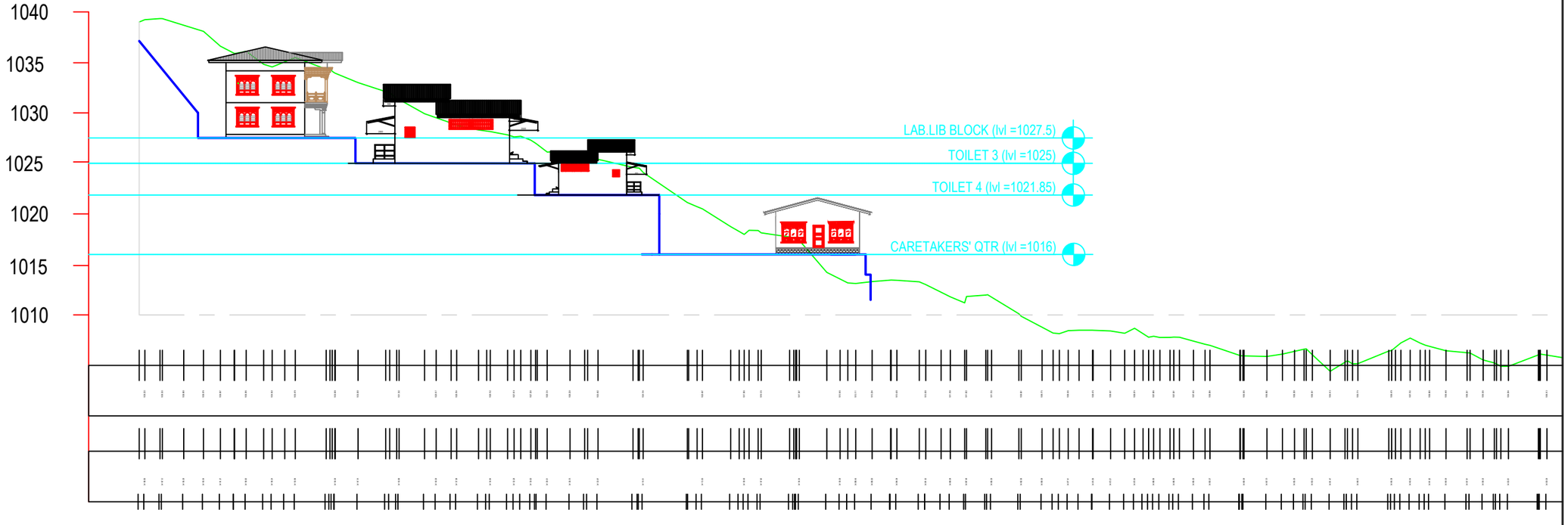

SECTION TOWARD VALLEY

Khorlochhu

ARCHITECTURAL DRAWING

PROJECT TITLE	DRAWING TITLE
Construction of Doksum Primary School	AS_STATED_IN_THE_DRAWING

NOTES

1. ALL DIMENSIONS ARE IN MILLIMETER & ELEVATION IN METER UNLESS SPECIFIED OTHERWISE.
2. ALL DIMENSIONS MEASURE UNFINISHED SURFACES UNLESS SPECIFIED OTHERWISE.
3. DIMENSIONS ARE TO BE READ AND NOT SCALED OFF.
4. ANY DISCREPANCIES IN THE DRAWING ARE TO BE BROUGHT TO THE IMMEDIATE NOTICE OF THE SUPERVISION TEAM.

CHECKED	APPROVED	DATE	DRAWING NO.
			AR_03
		MARCH, 2026	SCALE
			NTS

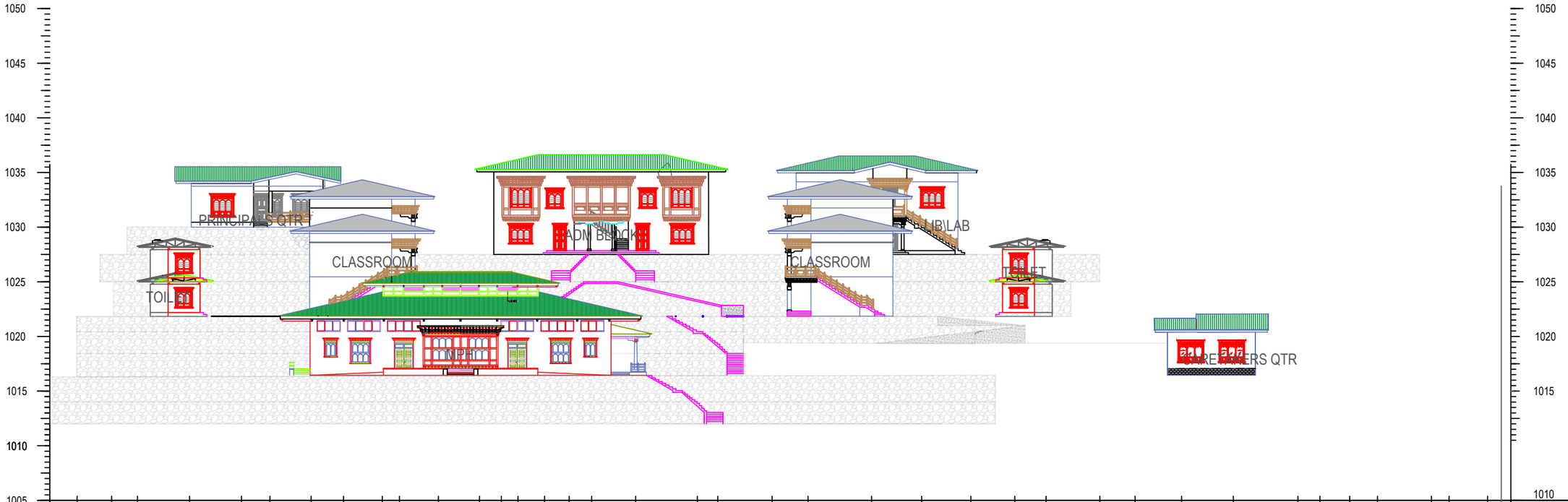
1050
1045
1040
1035
1030
1025
1020
1015
1010
1005
PRINCIPAL'S QTR
CLASSROOM
TOILET
ADM BLOCK
CLASSROOM
LIB\LAB
TOILET
TEACHERS QTR
1010

| | | |

ARCHITECTURAL DRAWINGS

PRINCIPAL QUARTER

Owner - Khorlochhu Hydro Power Limited
Location - Doksum New Township, Trashiyangtse

Khorlochhu

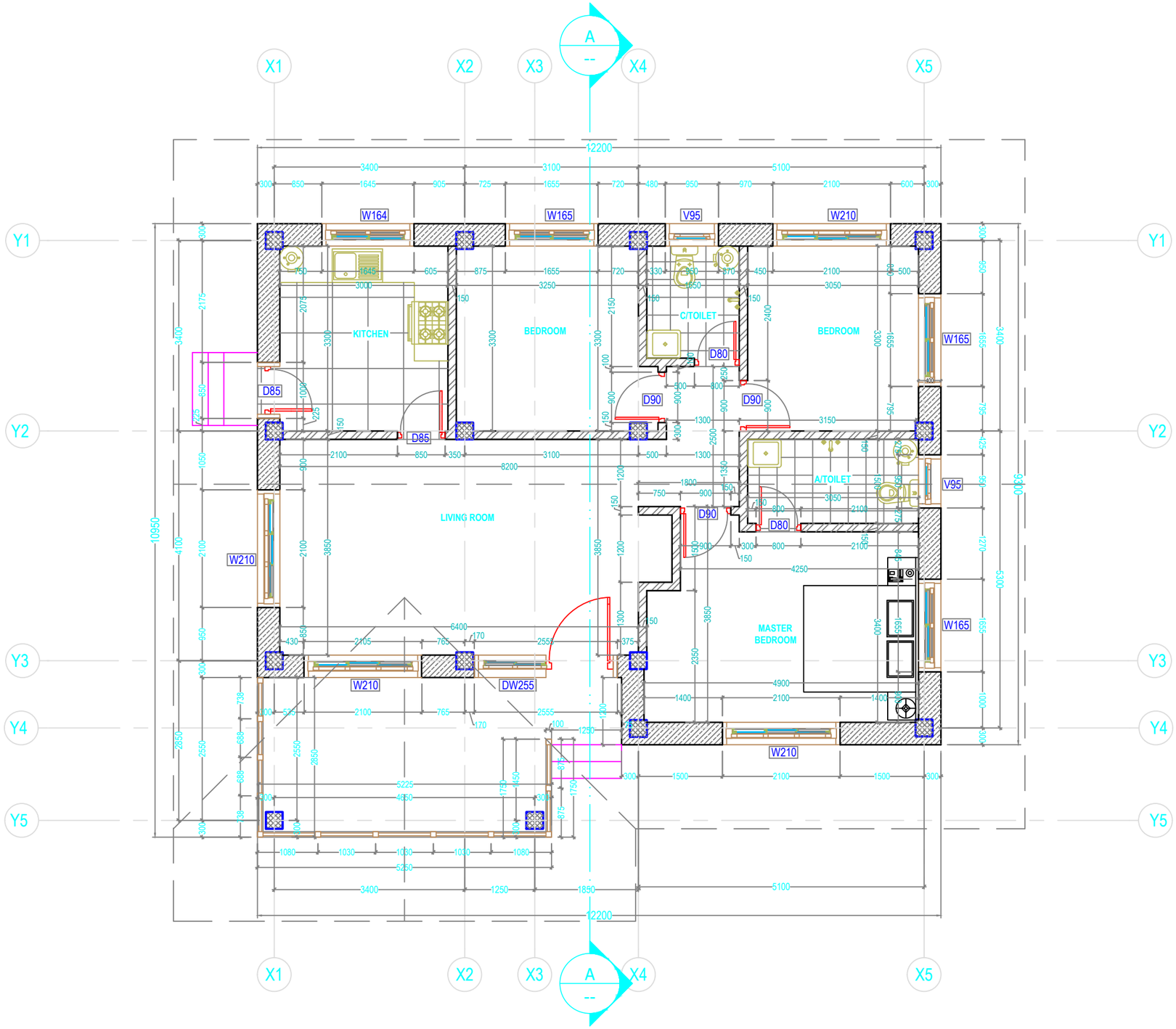

Khorlochhu

ARCHITECTURAL DRAWING

PROJECT TITLE	DRAWING TITLE
Construction of Doksum Primary School	GROUND_FLOOR_PLAN

NOTES

1. ALL DIMENSIONS ARE IN MILLIMETER & ELEVATION IN METER UNLESS SPECIFIED OTHERWISE.
2. ALL DIMENSIONS MEASURE UNFINISHED SURFACES UNLESS SPECIFIED OTHERWISE.
3. DIMENSIONS ARE TO BE READ AND NOT SCALED OFF.
4. ANY DISCREPANCIES IN THE DRAWING ARE TO BE BROUGHT TO THE IMMEDIATE NOTICE OF THE SUPERVISION TEAM.

CHECKED	APPROVED	DATE	DRAWING NO.
			AR_01
		MARCH, 2026	SCALE
			NTS

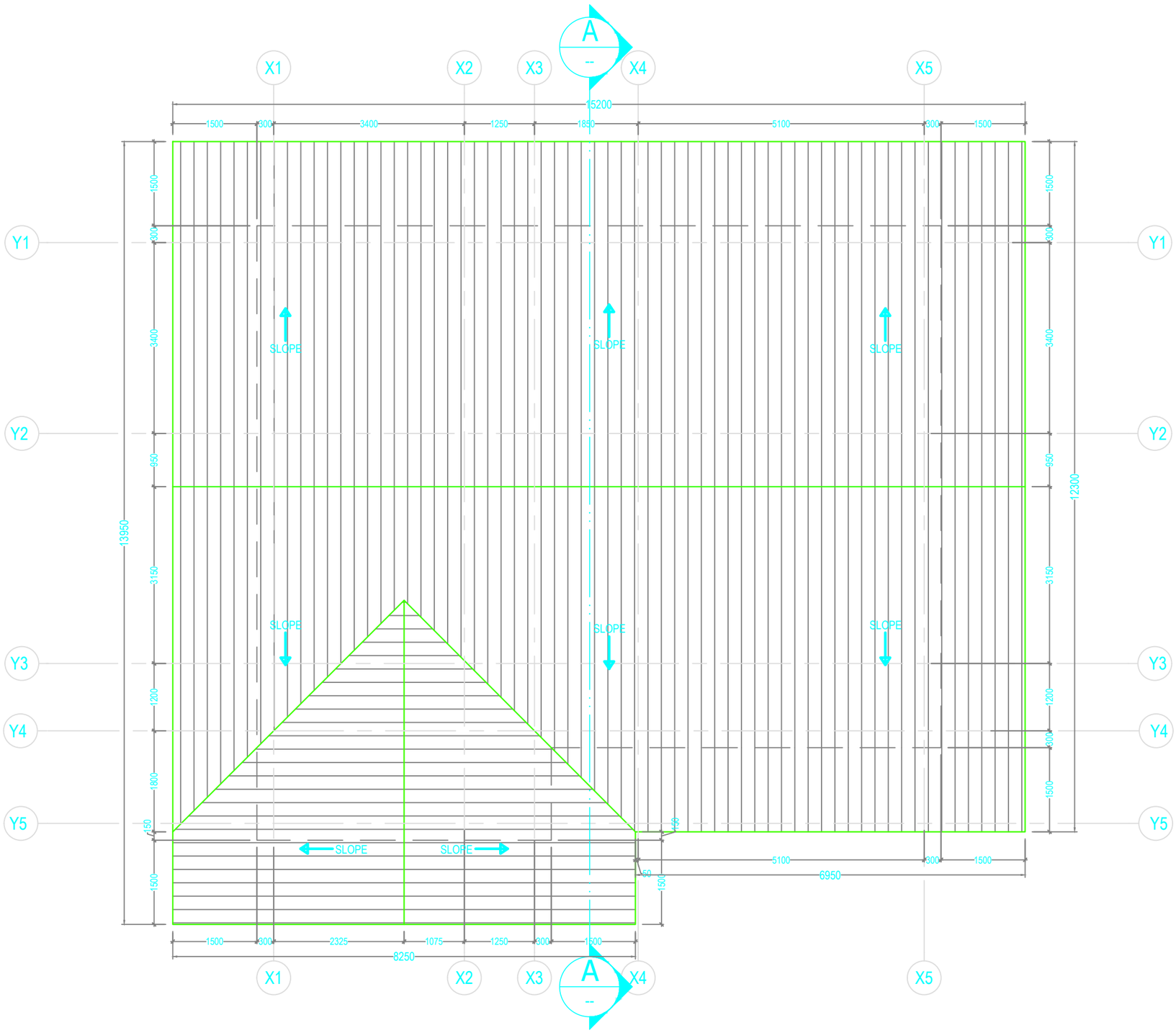

Khorlochhu	**ARCHITECTURAL DRAWING**	**NOTES**	**CHECKED**	**APPROVED**	**DATE**	**DRAWING NO.**
	PROJECT TITLE / **DRAWING TITLE**	1. ALL DIMENSIONS ARE IN MILLIMETER & ELEVATION IN METER UNLESS SPECIFIED OTHERWISE. 2. ALL DIMENSIONS MEASURE UNFINISHED SURFACES UNLESS SPECIFIED OTHERWISE. 3. DIMENSIONS ARE TO BE READ AND NOT SCALED OFF. 4. ANY DISCREPANCIES IN THE DRAWING ARE TO BE BROUGHT TO THE IMMEDIATE NOTICE OF THE SUPERVISION TEAM.				AR_02
	Construction of Doksum Primary School / **ROOF_PLAN**				MARCH, 2026	**SCALE** NTS

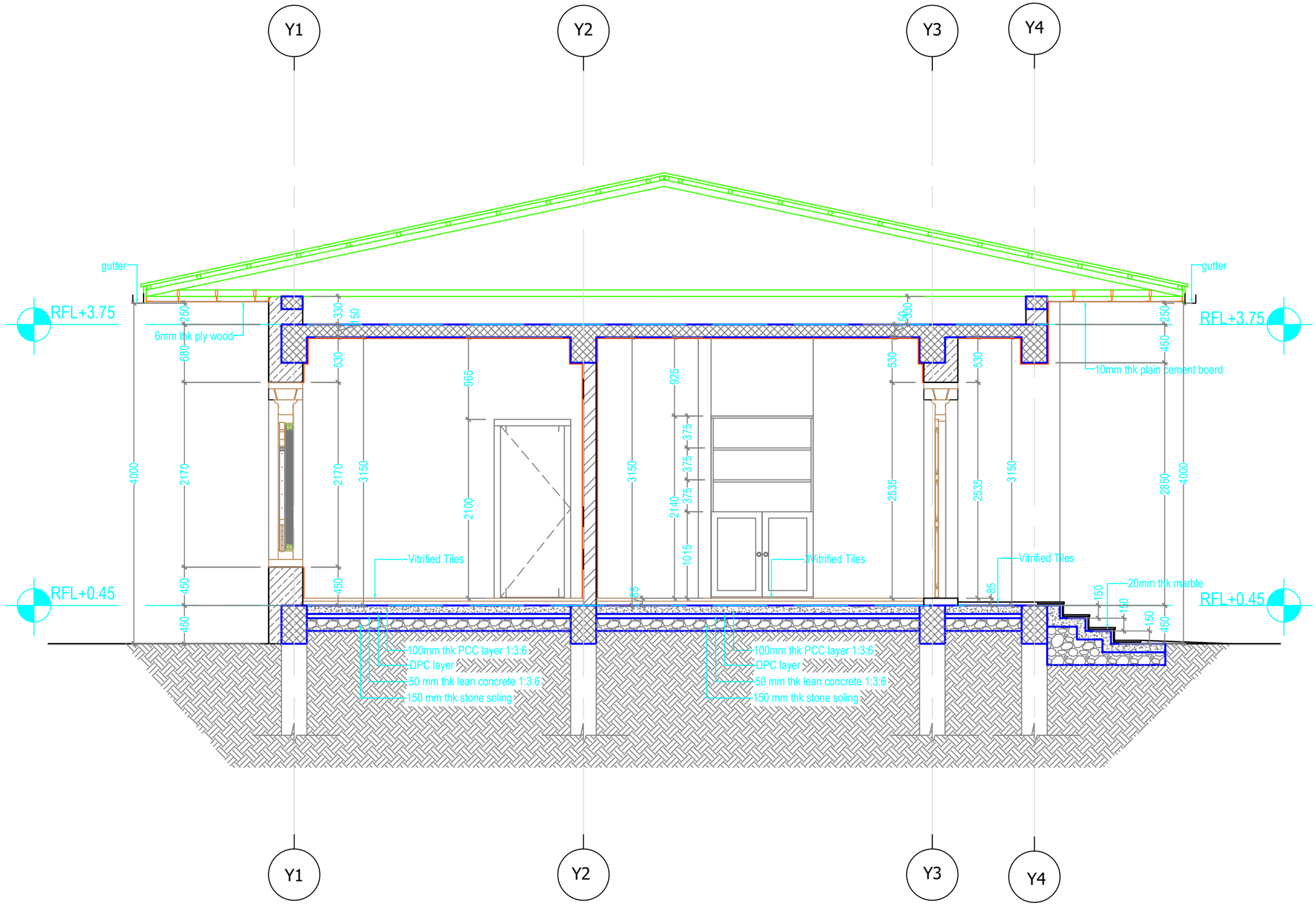

Khorlochhu

ARCHITECTURAL DRAWING

PROJECT TITLE	DRAWING TITLE
Construction of Doksum Primary School	SECTION_A-A

NOTES

1. ALL DIMENSIONS ARE IN MILLIMETER & ELEVATION IN METER UNLESS SPECIFIED OTHERWISE.
2. ALL DIMENSIONS MEASURE UNFINISHED SURFACES UNLESS SPECIFIED OTHERWISE.
3. DIMENSIONS ARE TO BE READ AND NOT SCALED OFF.
4. ANY DISCREPANCIES IN THE DRAWING ARE TO BE BROUGHT TO THE IMMEDIATE NOTICE OF THE SUPERVISION TEAM.

CHECKED	APPROVED	DATE	DRAWING NO.
			AR_03
		MARCH, 2026	SCALE
			NTS

Khorlochhu

ARCHITECTURAL DRAWING

PROJECT TITLE	DRAWING TITLE
Construction of Doksum Primary School	ELEVATION_A

NOTES

1. ALL DIMENSIONS ARE IN MILLIMETER & ELEVATION IN METER UNLESS SPECIFIED OTHERWISE.
2. ALL DIMENSIONS MEASURE UNFINISHED SURFACES UNLESS SPECIFIED OTHERWISE.
3. DIMENSIONS ARE TO BE READ AND NOT SCALED OFF.
4. ANY DISCREPANCIES IN THE DRAWING ARE TO BE BROUGHT TO THE IMMEDIATE NOTICE OF THE SUPERVISION TEAM.

CHECKED	APPROVED	DATE	DRAWING NO.
		MARCH, 2026	AR_04
			SCALE
			NTS

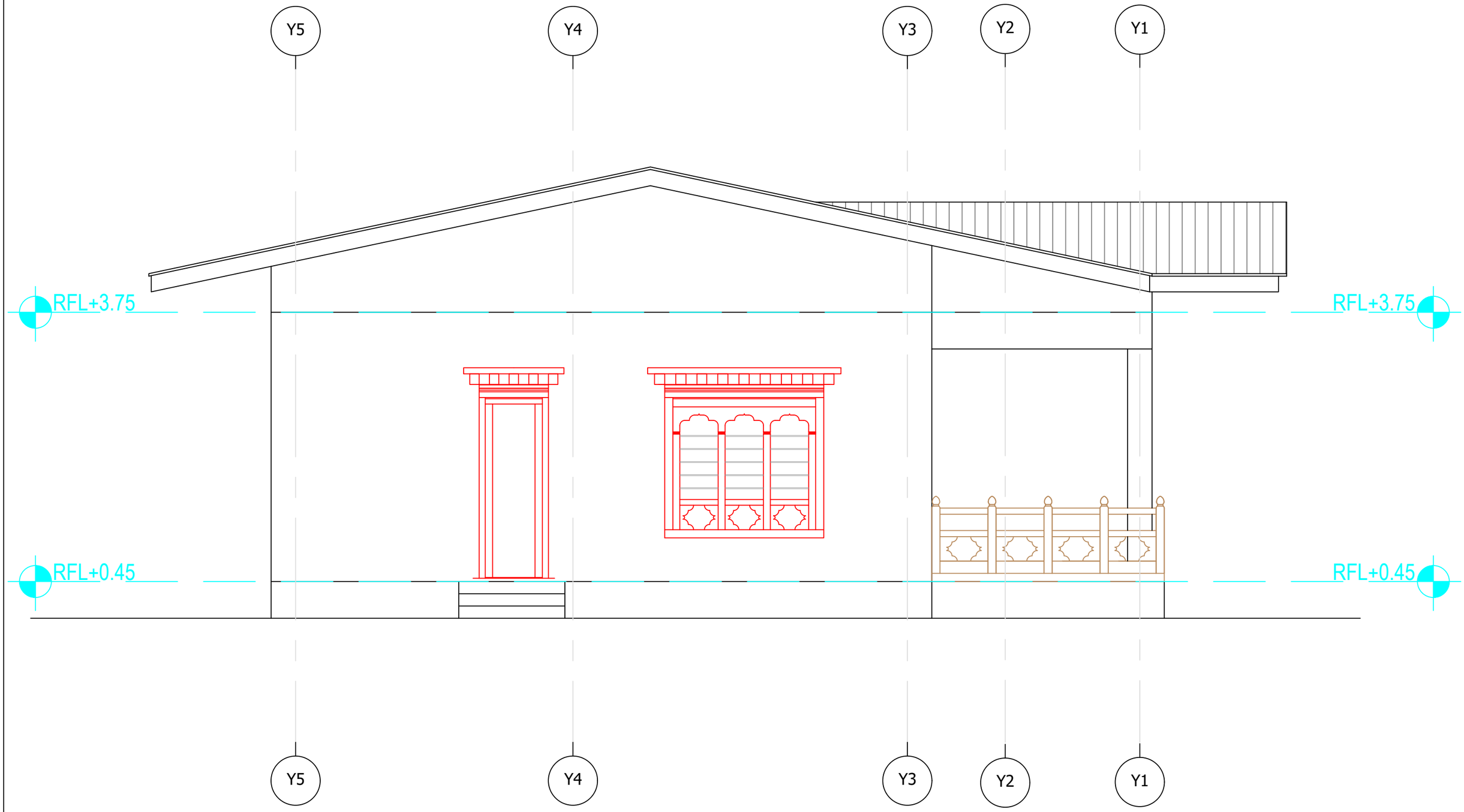

Khorlochhu

ARCHITECTURAL DRAWING

PROJECT TITLE	DRAWING TITLE
Construction of Doksum Primary School	ELEVATION_B

NOTES

1. ALL DIMENSIONS ARE IN MILLIMETER & ELEVATION IN METER UNLESS SPECIFIED OTHERWISE.
2. ALL DIMENSIONS MEASURE UNFINISHED SURFACES UNLESS SPECIFIED OTHERWISE.
3. DIMENSIONS ARE TO BE READ AND NOT SCALED OFF.
4. ANY DISCREPANCIES IN THE DRAWING ARE TO BE BROUGHT TO THE IMMEDIATE NOTICE OF THE SUPERVISION TEAM.

CHECKED	APPROVED	DATE	DRAWING NO.
			AR_05
		MARCH, 2026	SCALE
			NTS

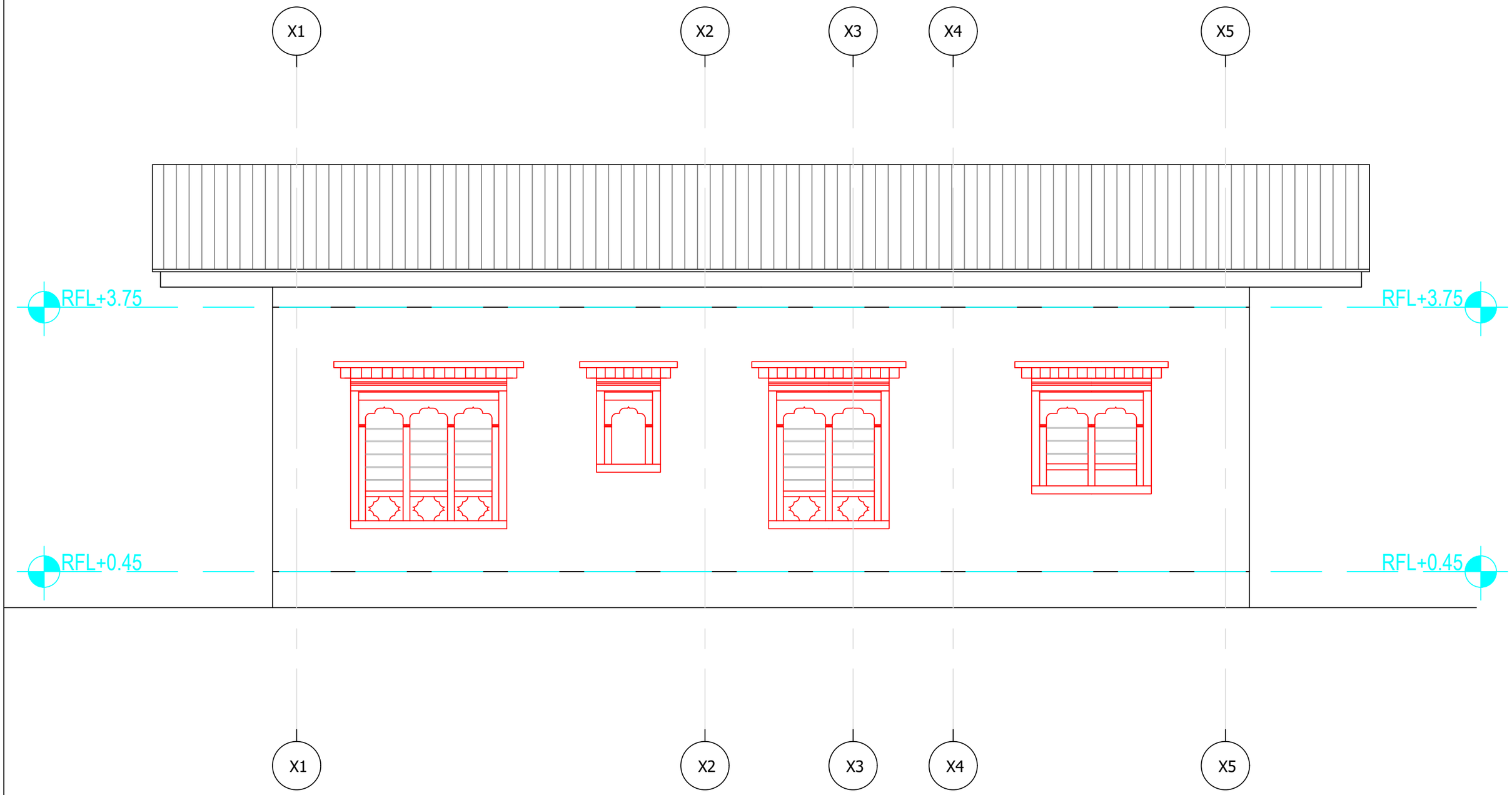

Khorlochhu

ARCHITECTURAL DRAWING

PROJECT TITLE	DRAWING TITLE
Construction of Doksum Primary School	ELEVATION_C

NOTES

1. ALL DIMENSIONS ARE IN MILLIMETER & ELEVATION IN METER UNLESS SPECIFIED OTHERWISE.
2. ALL DIMENSIONS MEASURE UNFINISHED SURFACES UNLESS SPECIFIED OTHERWISE.
3. DIMENSIONS ARE TO BE READ AND NOT SCALED OFF.
4. ANY DISCREPANCIES IN THE DRAWING ARE TO BE BROUGHT TO THE IMMEDIATE NOTICE OF THE SUPERVISION TEAM.

CHECKED	APPROVED	DATE	DRAWING NO.
			AR_06
		MARCH, 2026	SCALE
			NTS

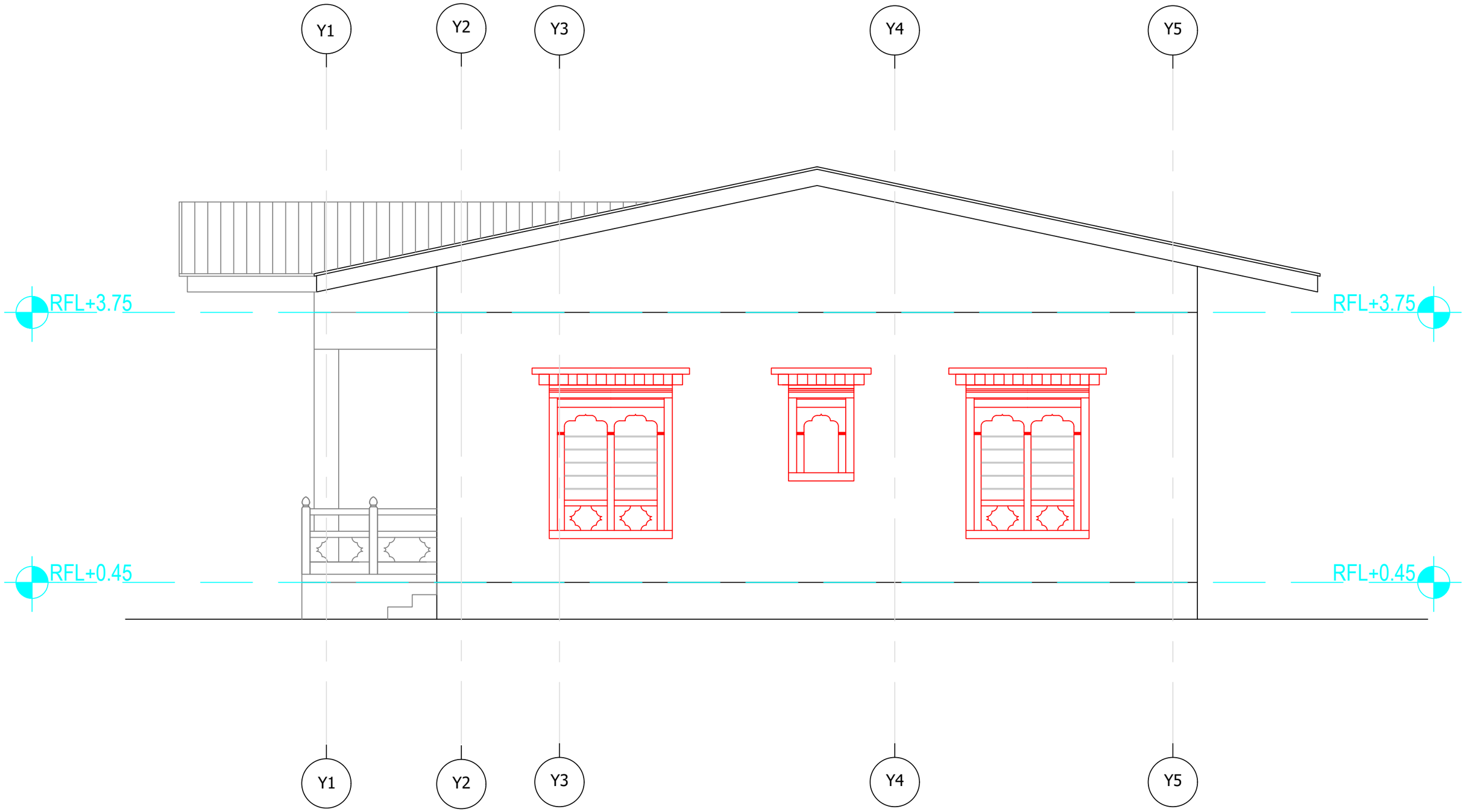

Khorlochhu

ARCHITECTURAL DRAWING

PROJECT TITLE	DRAWING TITLE
Construction of Doksum Primary School	ELEVATION_D

NOTES

1. ALL DIMENSIONS ARE IN MILLIMETER & ELEVATION IN METER UNLESS SPECIFIED OTHERWISE.
2. ALL DIMENSIONS MEASURE UNFINISHED SURFACES UNLESS SPECIFIED OTHERWISE.
3. DIMENSIONS ARE TO BE READ AND NOT SCALED OFF.
4. ANY DISCREPANCIES IN THE DRAWING ARE TO BE BROUGHT TO THE IMMEDIATE NOTICE OF THE SUPERVISION TEAM.

CHECKED	APPROVED	DATE	DRAWING NO.
			AR_07
		MARCH, 2026	SCALE
			NTS

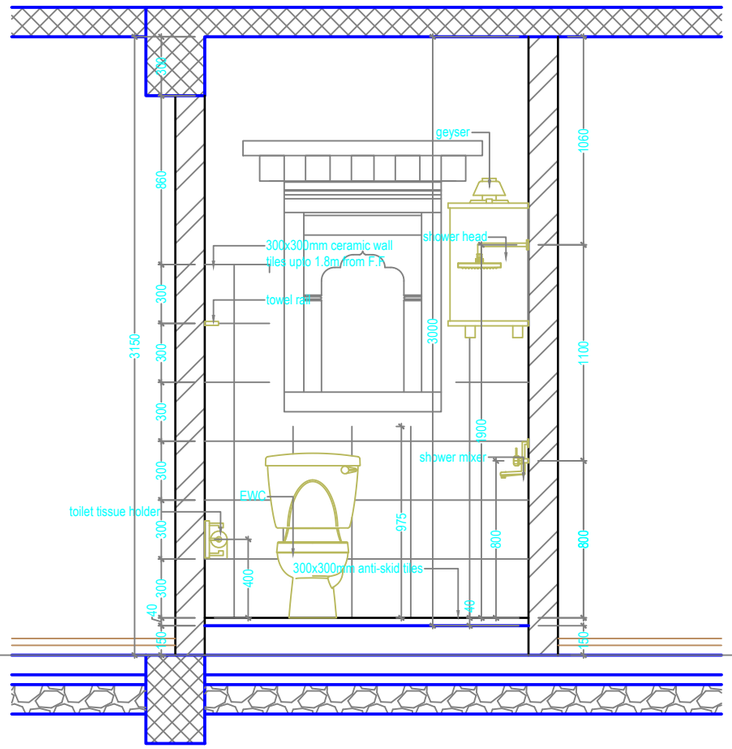

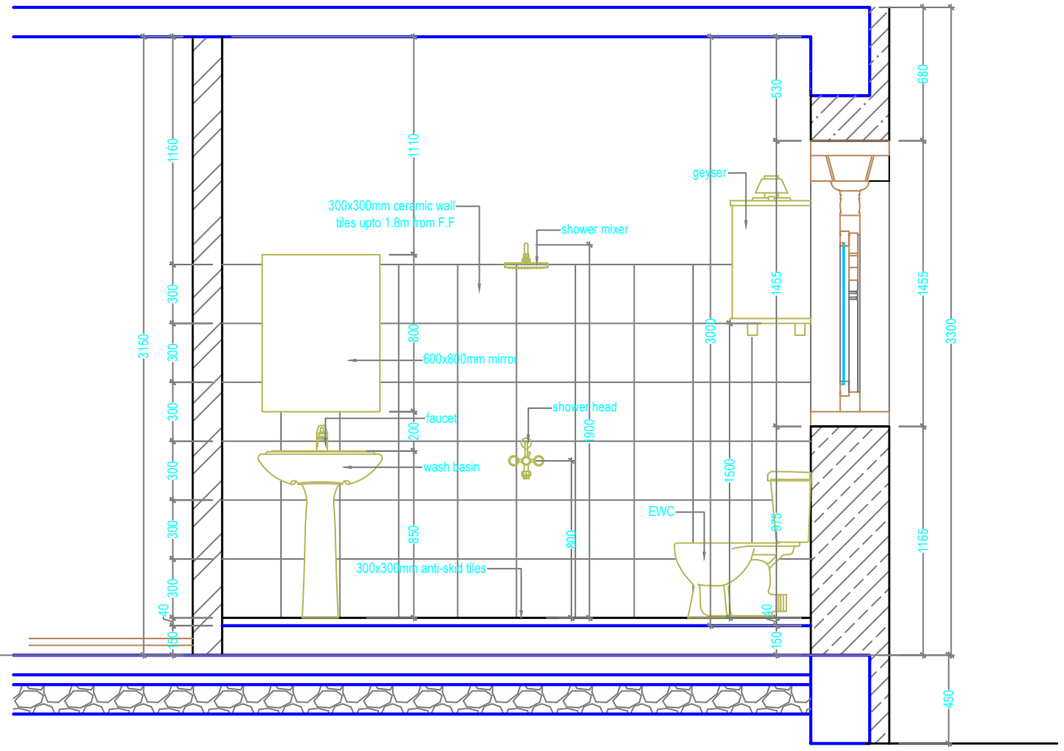

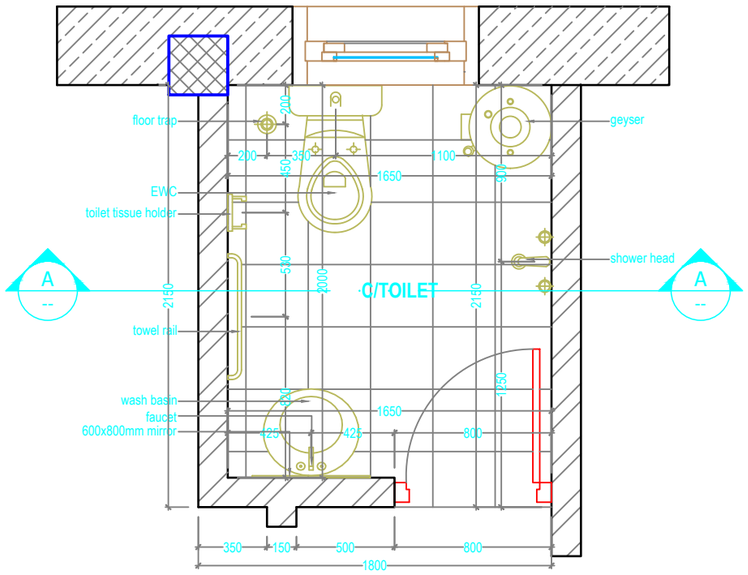

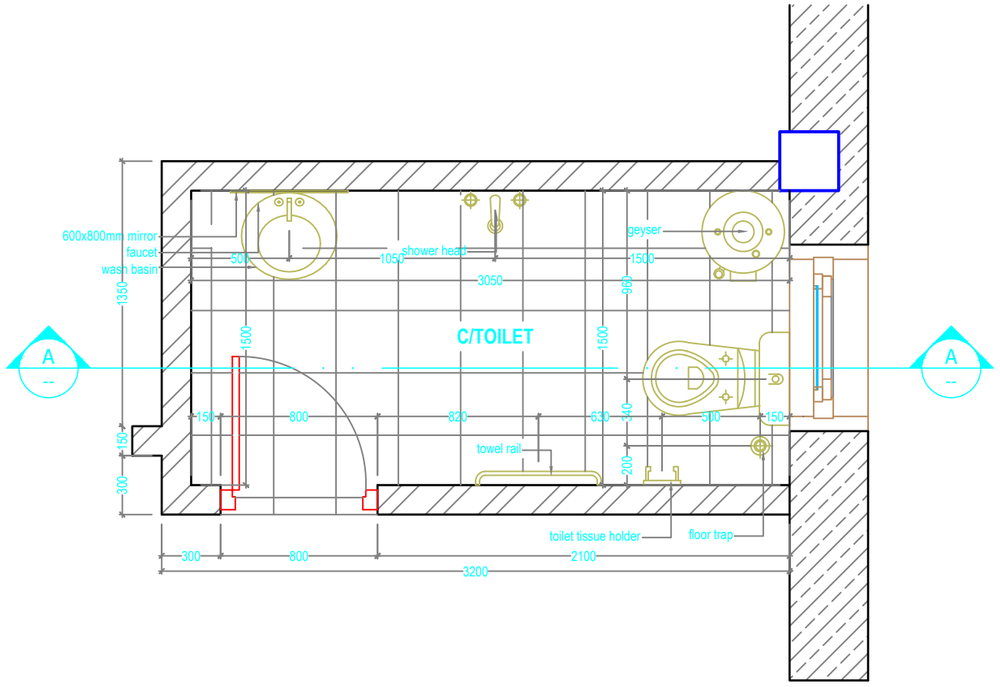

Khorlochhu

ARCHITECTURAL DRAWING

PROJECT TITLE	DRAWING TITLE
Construction of Doksum Primary School	TOILET_DETAILS

NOTES

1. ALL DIMENSIONS ARE IN MILLIMETER & ELEVATION IN METER UNLESS SPECIFIED OTHERWISE.
2. ALL DIMENSIONS MEASURE UNFINISHED SURFACES UNLESS SPECIFIED OTHERWISE.
3. DIMENSIONS ARE TO BE READ AND NOT SCALED OFF.
4. ANY DISCREPANCIES IN THE DRAWING ARE TO BE BROUGHT TO THE IMMEDIATE NOTICE OF THE SUPERVISION TEAM.

CHECKED	APPROVED	DATE	DRAWING NO.
			AR_08
		MARCH, 2026	SCALE
			NTS

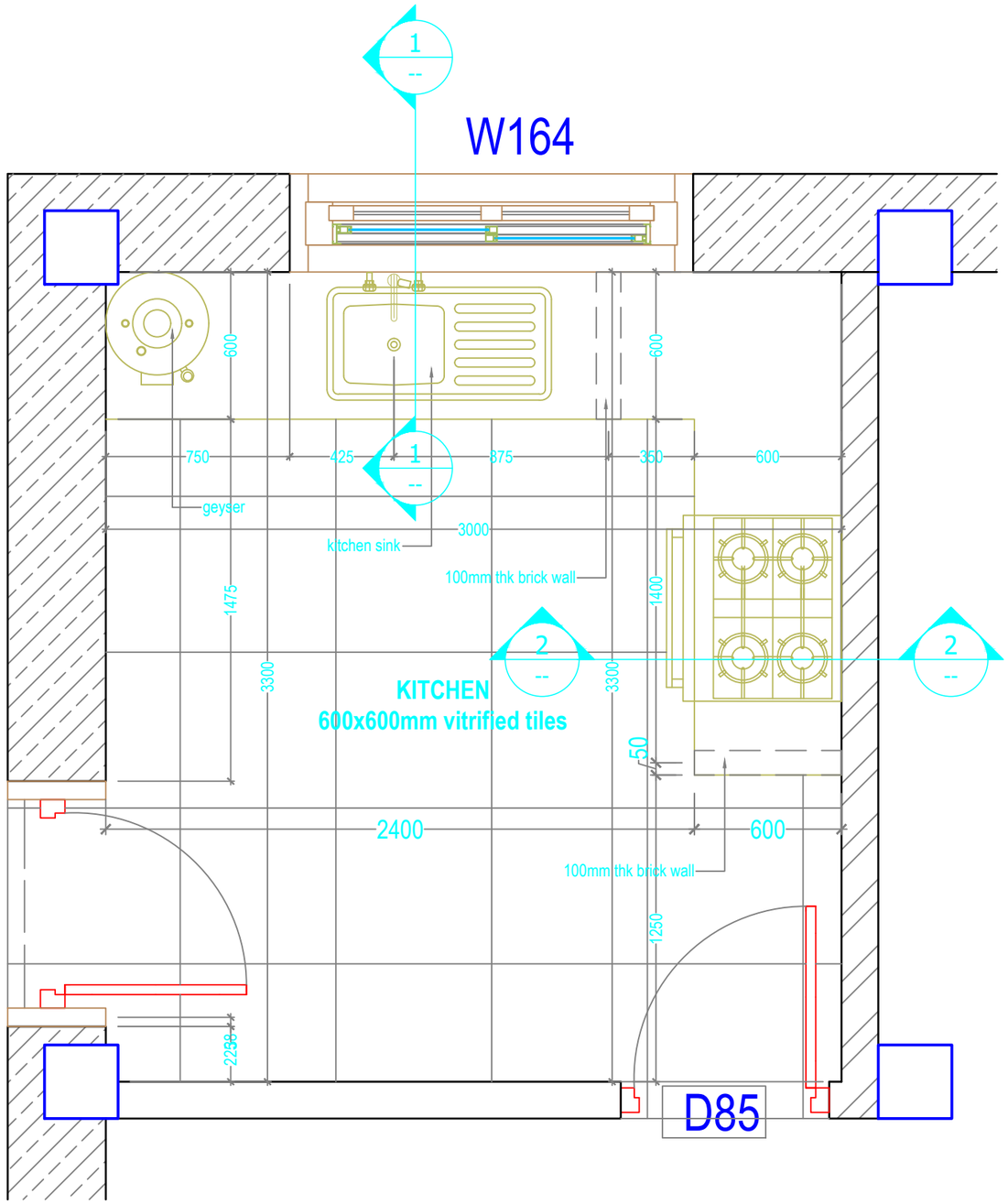

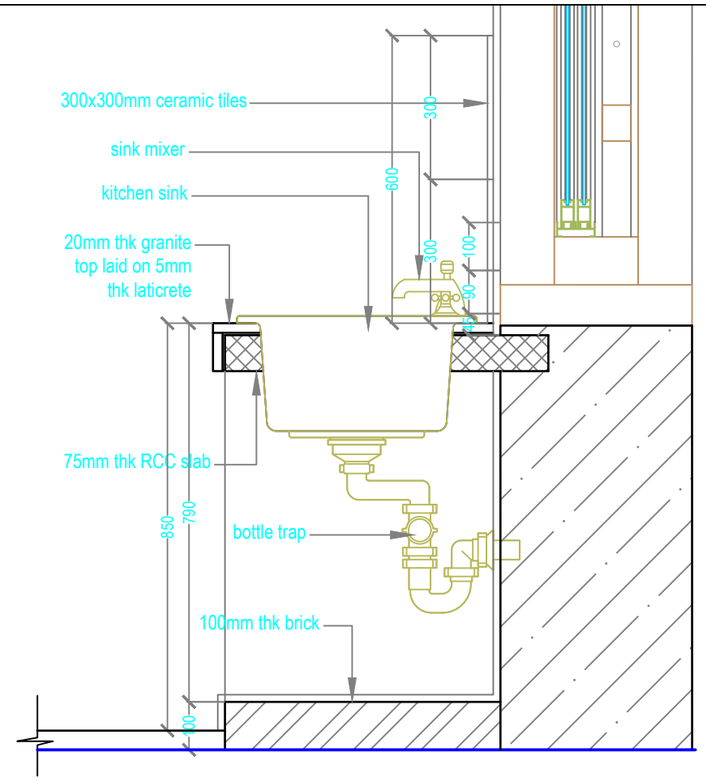

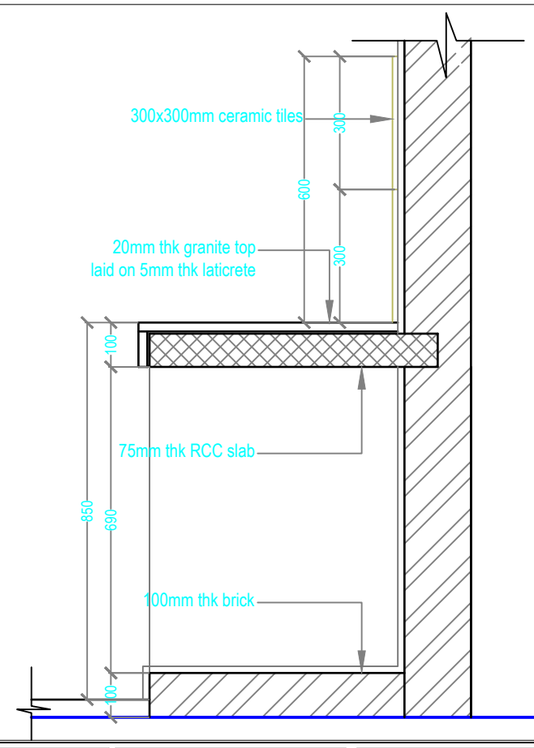

Khorlochhu

ARCHITECTURAL DRAWING

PROJECT TITLE	DRAWING TITLE
Construction of Doksum Primary School	KITCHEN_DETAILS

NOTES

1. ALL DIMENSIONS ARE IN MILLIMETER & ELEVATION IN METER UNLESS SPECIFIED OTHERWISE.
2. ALL DIMENSIONS MEASURE UNFINISHED SURFACES UNLESS SPECIFIED OTHERWISE.
3. DIMENSIONS ARE TO BE READ AND NOT SCALED OFF.
4. ANY DISCREPANCIES IN THE DRAWING ARE TO BE BROUGHT TO THE IMMEDIATE NOTICE OF THE SUPERVISION TEAM.

CHECKED	APPROVED	DATE	DRAWING NO.
			AR_09
		MARCH, 2026	SCALE
			NTS

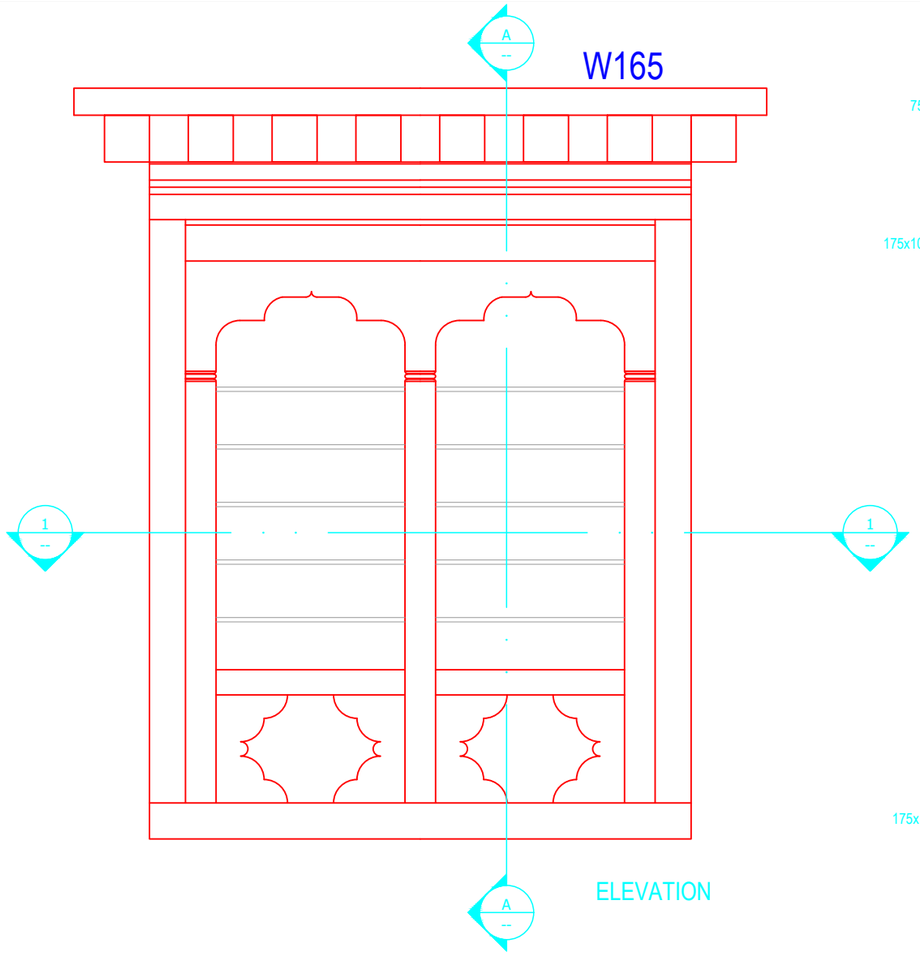

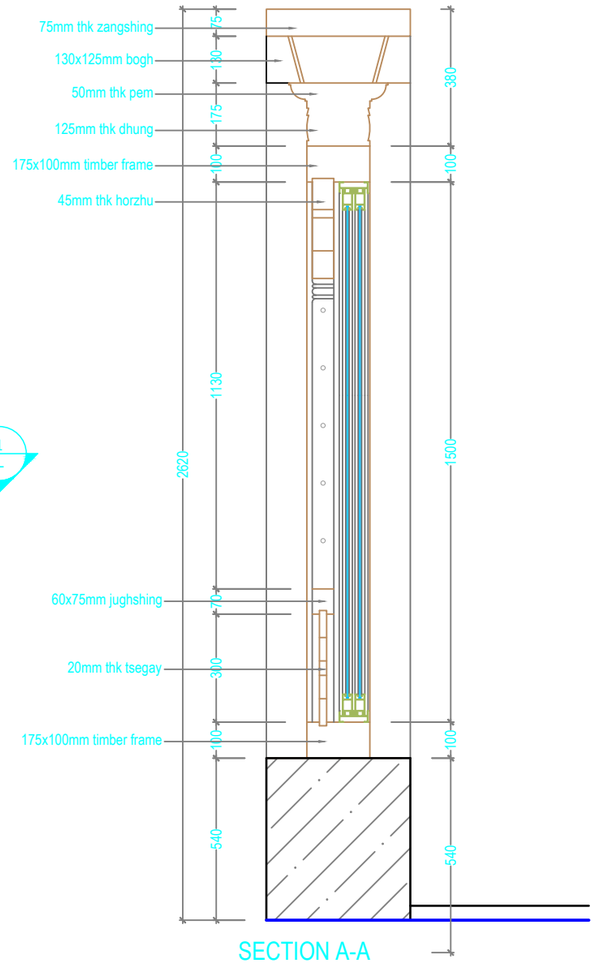

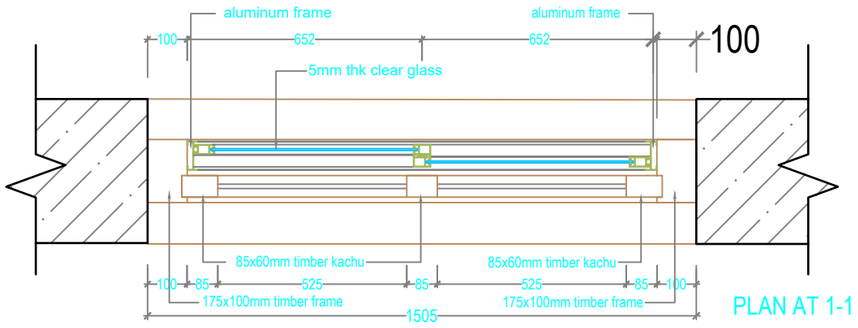

Khorlochhu

ARCHITECTURAL DRAWING

PROJECT TITLE	DRAWING TITLE
Construction of Doksum Primary School	WINDOW_DETAILS-W165

NOTES

1. ALL DIMENSIONS ARE IN MILLIMETER & ELEVATION IN METER UNLESS SPECIFIED OTHERWISE.
2. ALL DIMENSIONS MEASURE UNFINISHED SURFACES UNLESS SPECIFIED OTHERWISE.
3. DIMENSIONS ARE TO BE READ AND NOT SCALED OFF.
4. ANY DISCREPANCIES IN THE DRAWING ARE TO BE BROUGHT TO THE IMMEDIATE NOTICE OF THE SUPERVISION TEAM.

CHECKED	APPROVED	DATE	DRAWING NO.
			AR_10
		MARCH, 2026	SCALE
			NTS

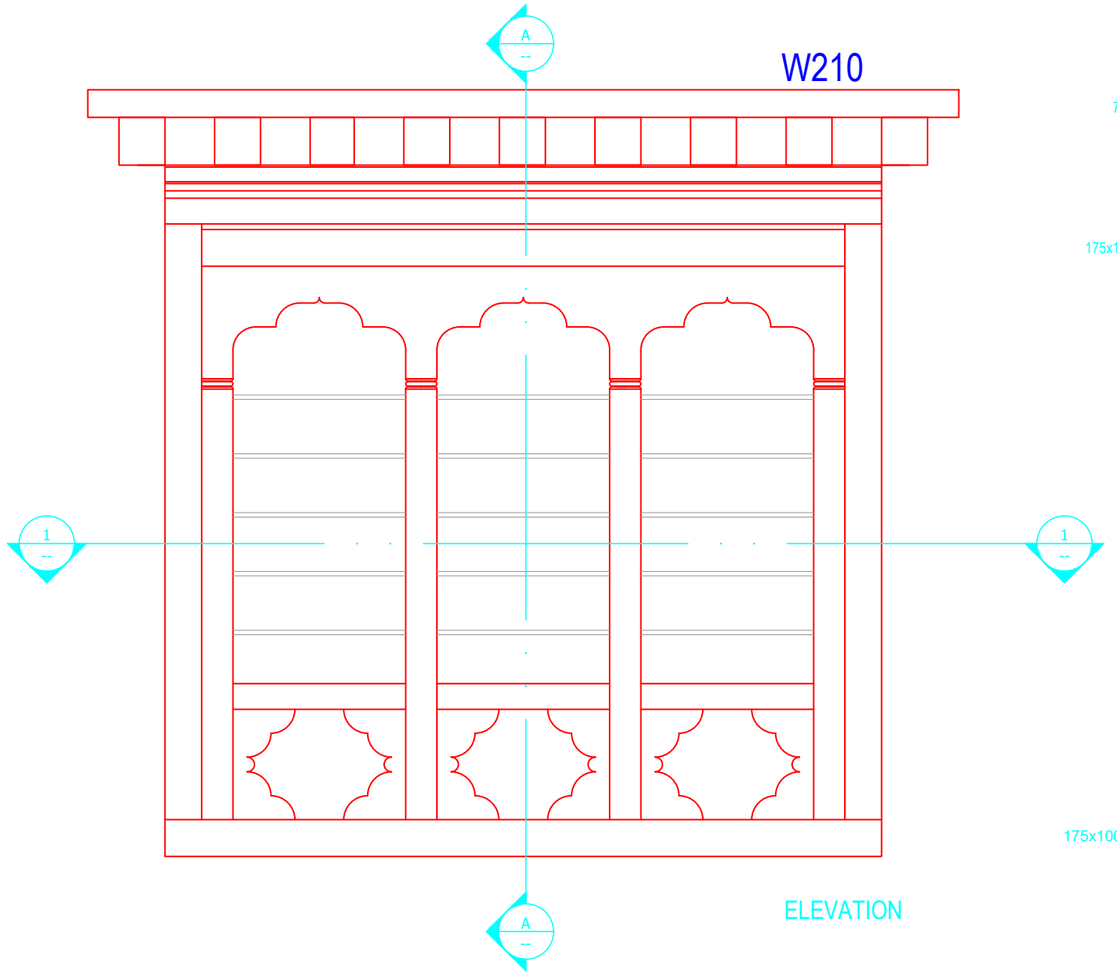

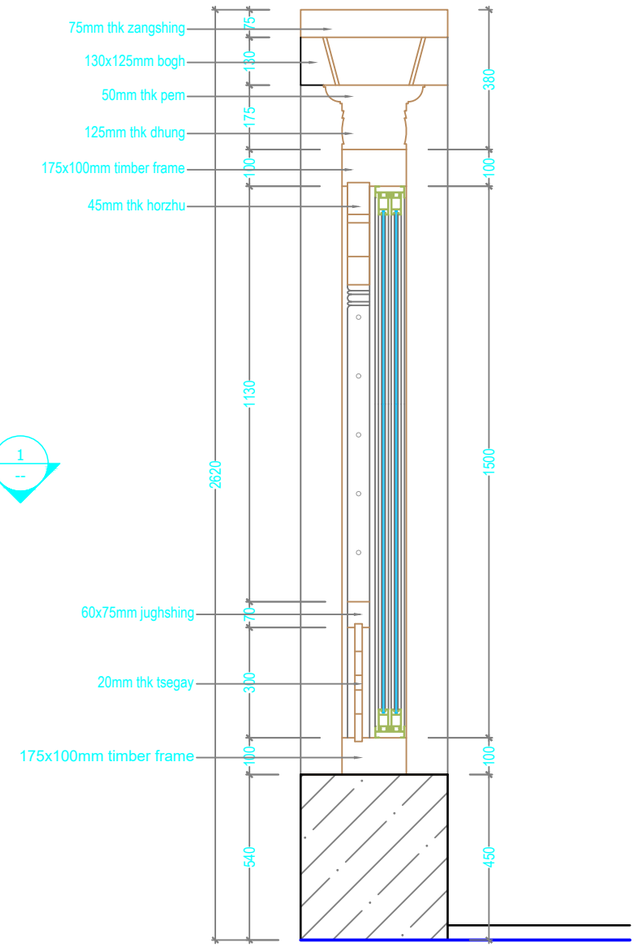

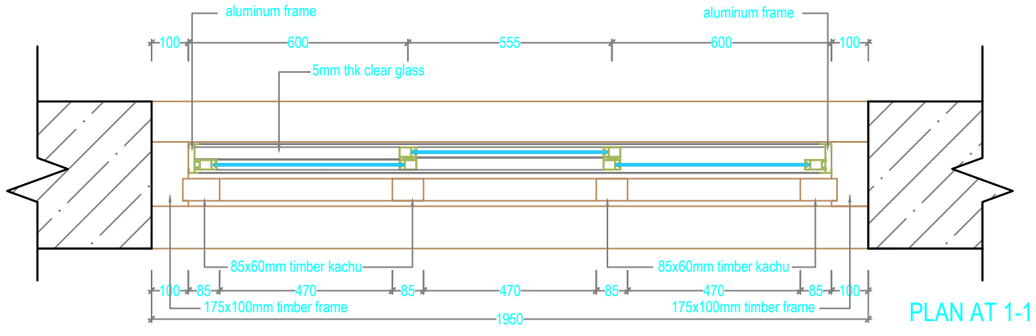

Khorlochhu

ARCHITECTURAL DRAWING

PROJECT TITLE	DRAWING TITLE
Construction of Doksum Primary School	WINDOW_DETAILS-W210

NOTES

1. ALL DIMENSIONS ARE IN MILLIMETER & ELEVATION IN METER UNLESS SPECIFIED OTHERWISE.
2. ALL DIMENSIONS MEASURE UNFINISHED SURFACES UNLESS SPECIFIED OTHERWISE.
3. DIMENSIONS ARE TO BE READ AND NOT SCALED OFF.
4. ANY DISCREPANCIES IN THE DRAWING ARE TO BE BROUGHT TO THE IMMEDIATE NOTICE OF THE SUPERVISION TEAM.

CHECKED	APPROVED	DATE	DRAWING NO.
			AR_11
		MARCH, 2026	SCALE
			NTS

W164

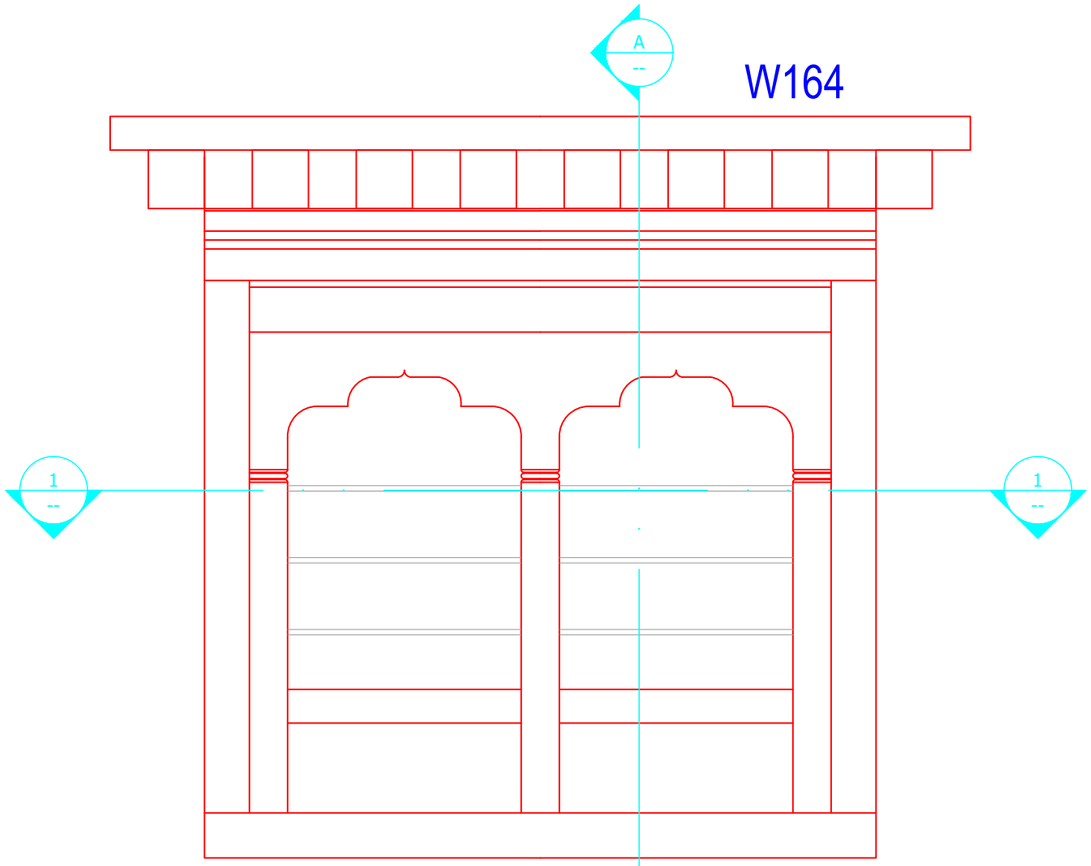

ELEVATION

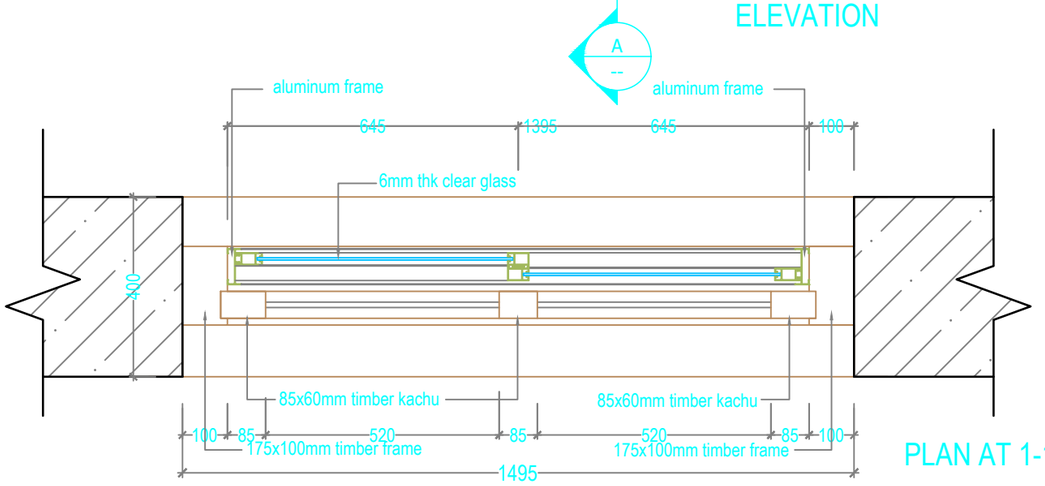

PLAN AT 1-1

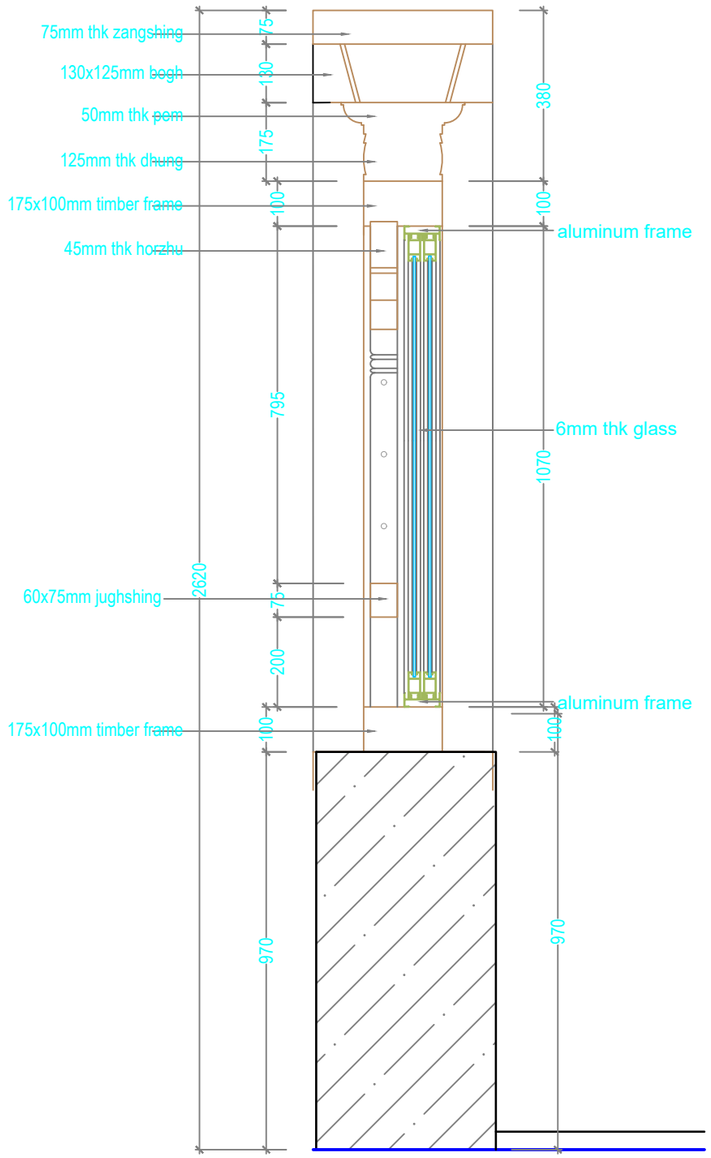

SECTION A-A

Khorlochhu	**ARCHITECTURAL DRAWING**	**NOTES**	**CHECKED**	**APPROVED**	**DATE**	**DRAWING NO.**
	PROJECT TITLE	**DRAWING TITLE**				**AR_12**
	Construction of Doksum Primary School	**WINDOW_DETAILS-W164**			MARCH, 2026	**SCALE**
						NTS

1. ALL DIMENSIONS ARE IN MILLIMETER & ELEVATION IN METER UNLESS SPECIFIED OTHERWISE.
2. ALL DIMENSIONS MEASURE UNFINISHED SURFACES UNLESS SPECIFIED OTHERWISE.
3. DIMENSIONS ARE TO BE READ AND NOT SCALED OFF.
4. ANY DISCREPANCIES IN THE DRAWING ARE TO BE BROUGHT TO THE IMMEDIATE NOTICE OF THE SUPERVISION TEAM.

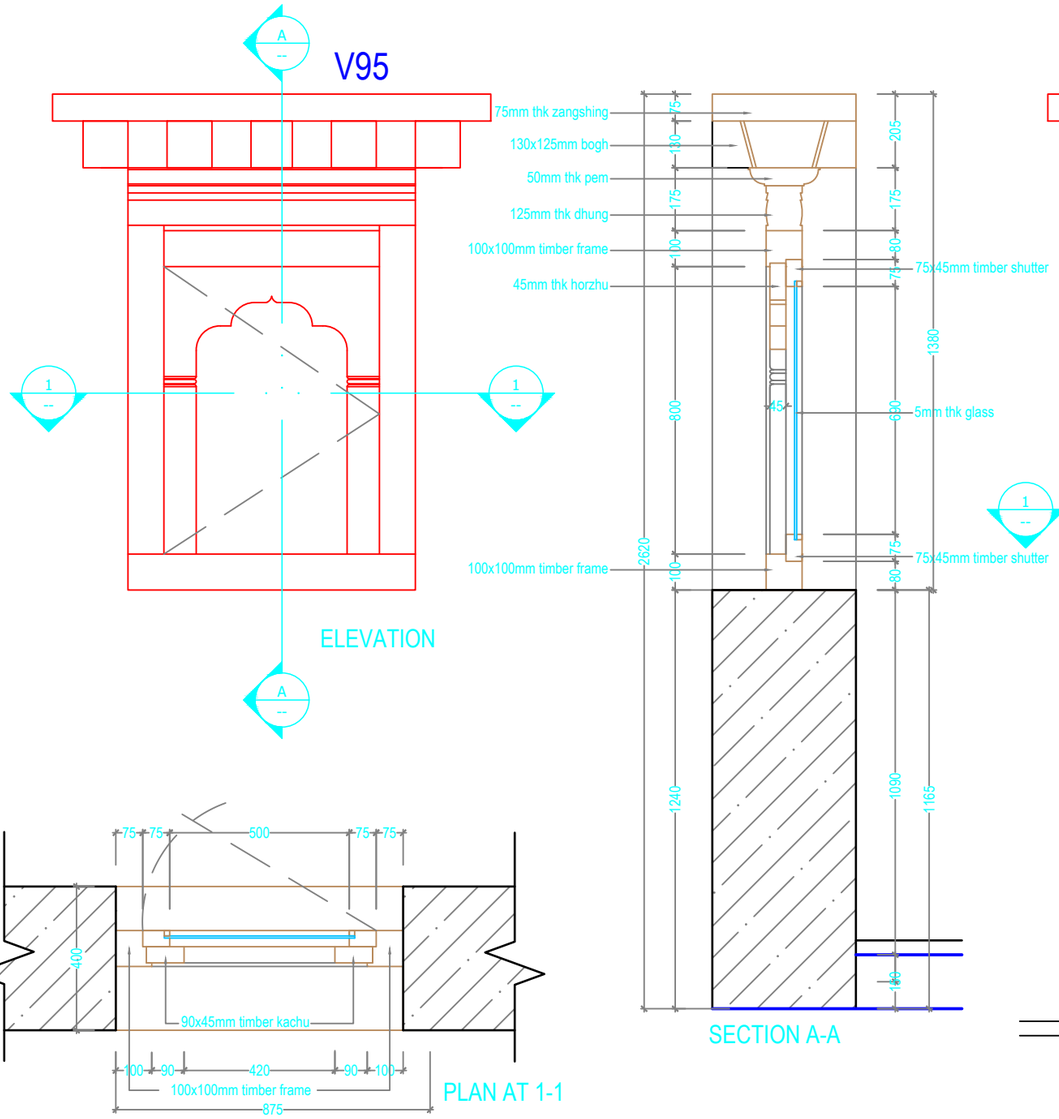

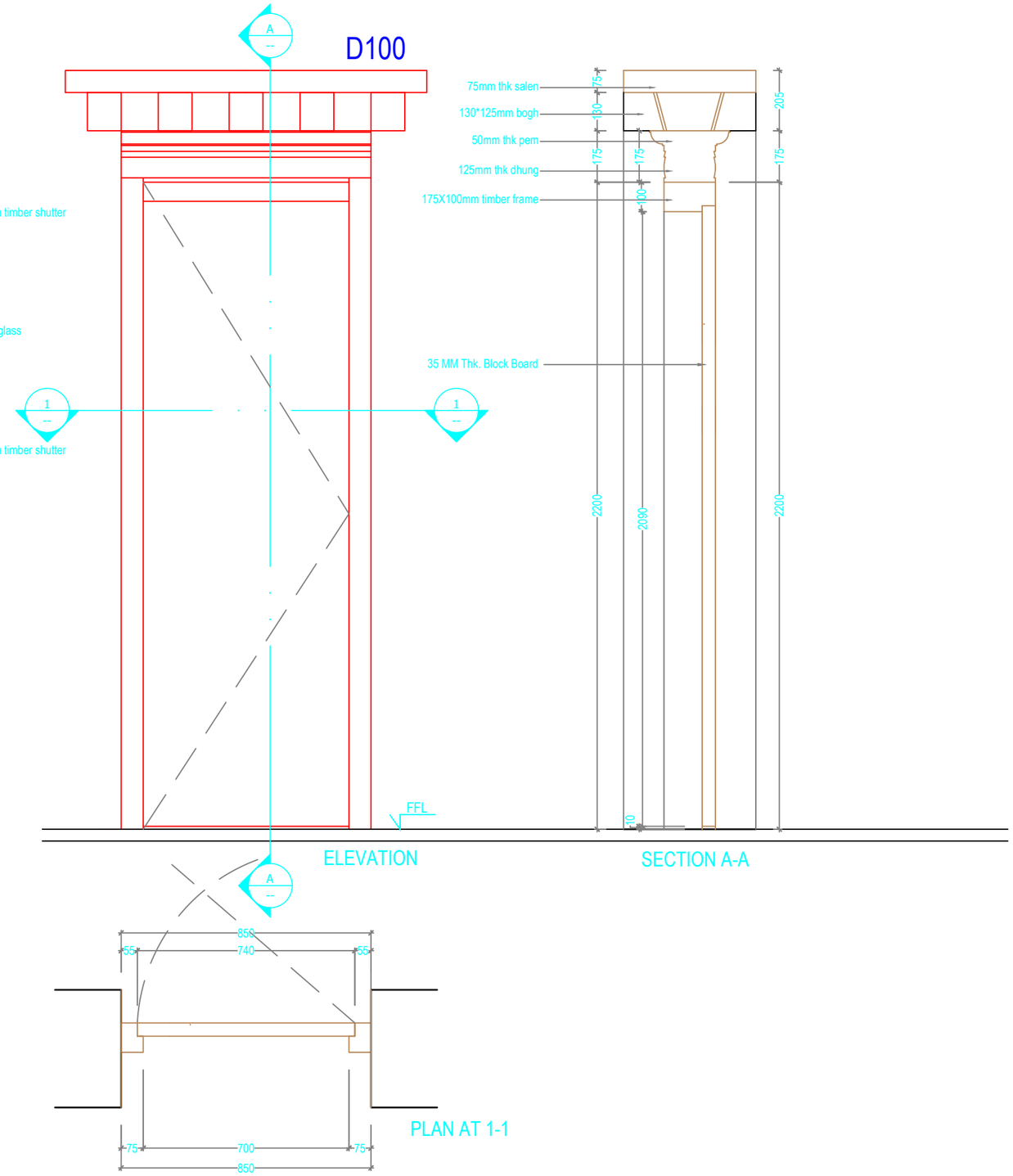

Khorlochhu

ARCHITECTURAL DRAWING

PROJECT TITLE	DRAWING TITLE
Construction of Doksum Primary School	WINDOW_&_DOOR_DETAILS-V95_&_D100

NOTES

1. ALL DIMENSIONS ARE IN MILLIMETER & ELEVATION IN METER UNLESS SPECIFIED OTHERWISE.
2. ALL DIMENSIONS MEASURE UNFINISHED SURFACES UNLESS SPECIFIED OTHERWISE.
3. DIMENSIONS ARE TO BE READ AND NOT SCALED OFF.
4. ANY DISCREPANCIES IN THE DRAWING ARE TO BE BROUGHT TO THE IMMEDIATE NOTICE OF THE SUPERVISION TEAM.

CHECKED	APPROVED	DATE	DRAWING NO.
			AR_13
		MARCH, 2026	SCALE
			NTS

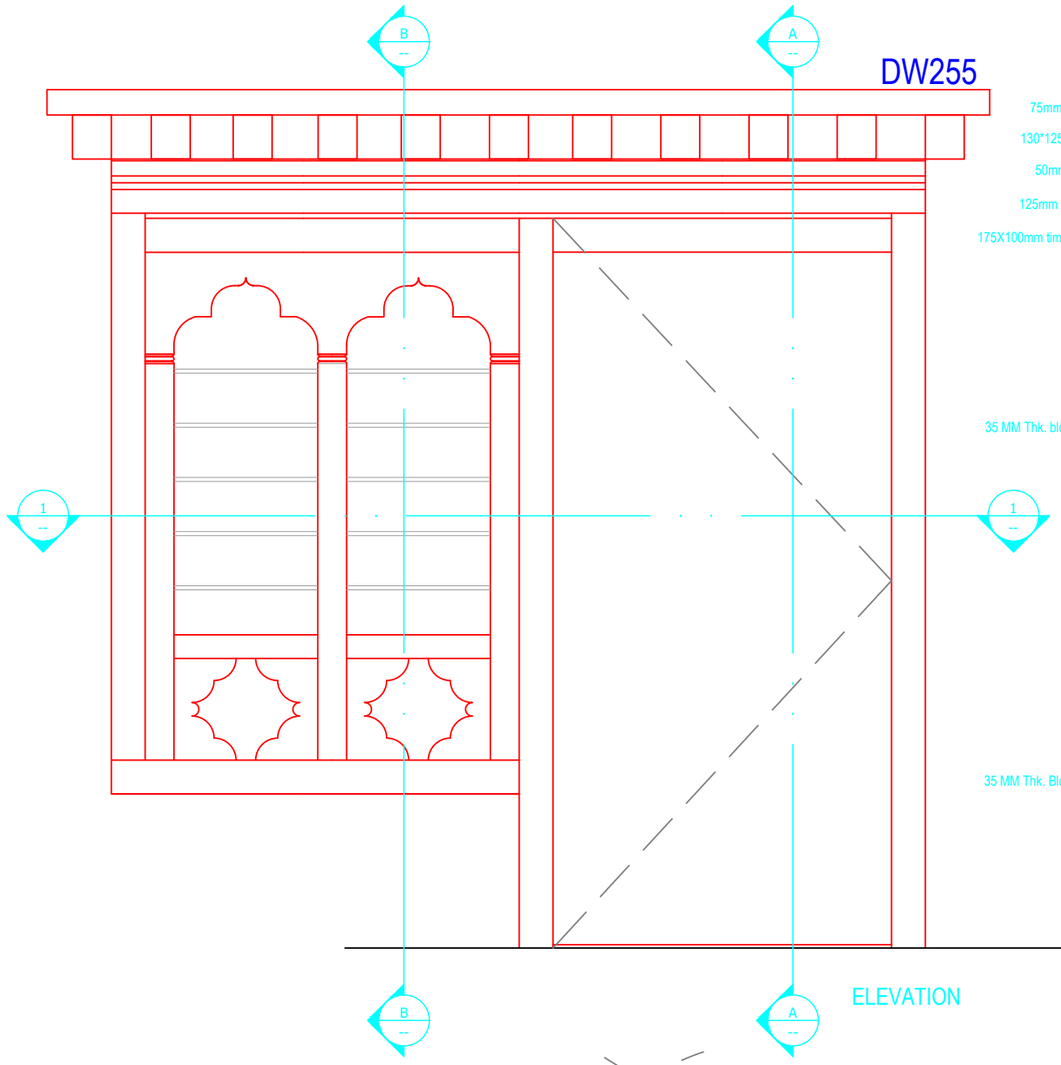

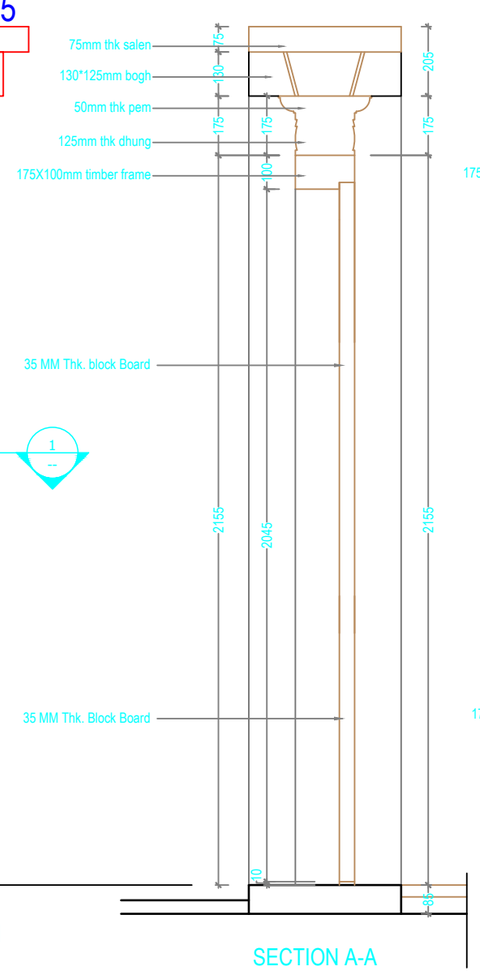

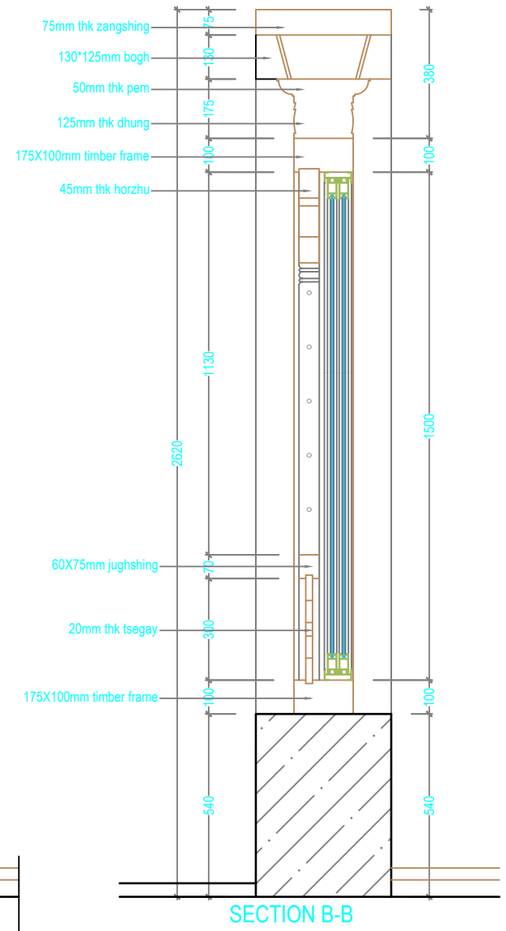

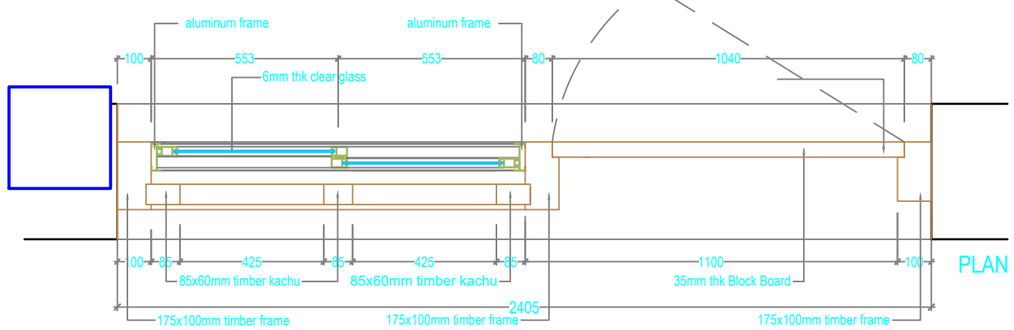

Khorlochhu	**ARCHITECTURAL DRAWING**	**NOTES**	**CHECKED**	**APPROVED**	**DATE**	**DRAWING NO.**
	PROJECT TITLE / **DRAWING TITLE**	1. ALL DIMENSIONS ARE IN MILLIMETER & ELEVATION IN METER UNLESS SPECIFIED OTHERWISE. 2. ALL DIMENSIONS MEASURE UNFINISHED SURFACES UNLESS SPECIFIED OTHERWISE. 3. DIMENSIONS ARE TO BE READ AND NOT SCALED OFF. 4. ANY DISCREPANCIES IN THE DRAWING ARE TO BE BROUGHT TO THE IMMEDIATE NOTICE OF THE SUPERVISION TEAM.				AR_14
	Construction of Doksum Primary School / DOOR_WINDOW_DETAILS-DW255				MARCH, 2026	SCALE: NTS

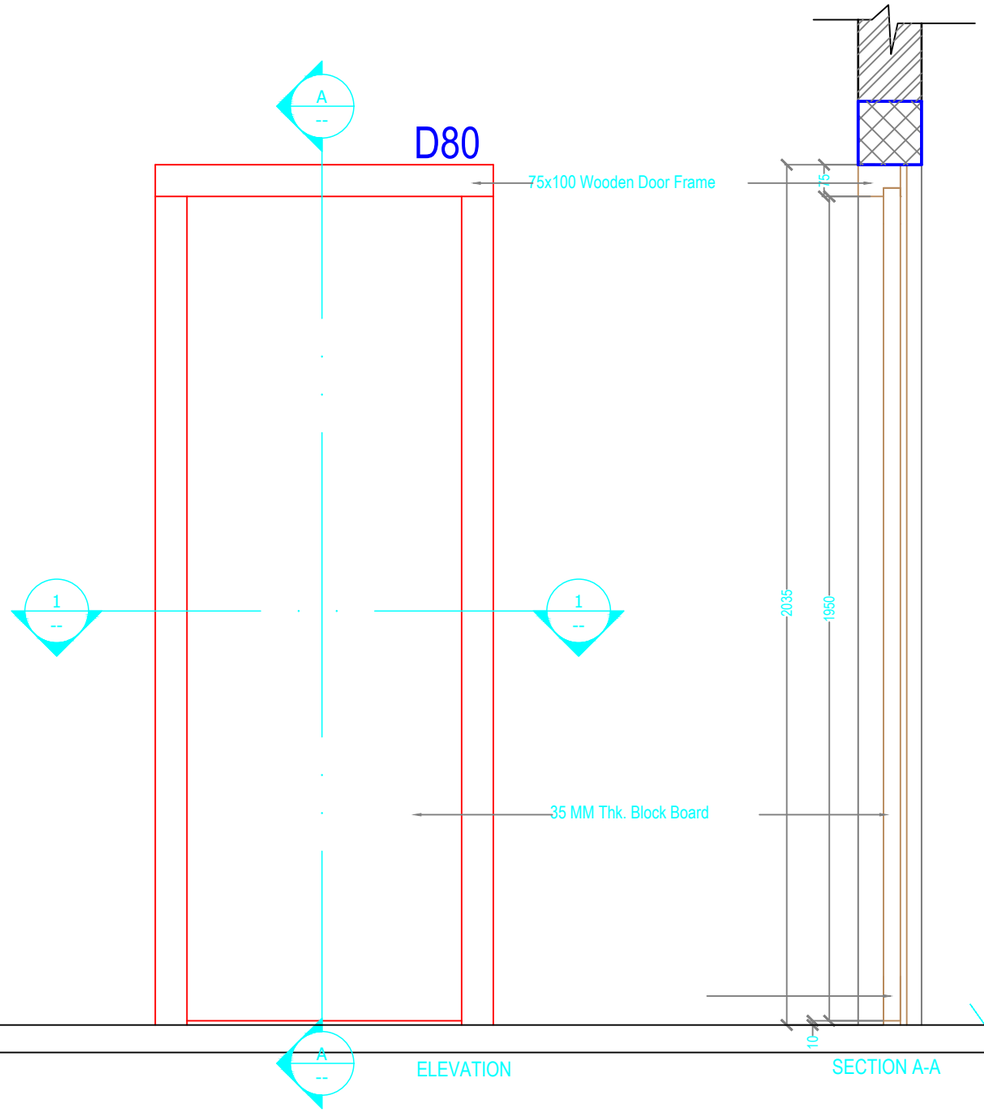

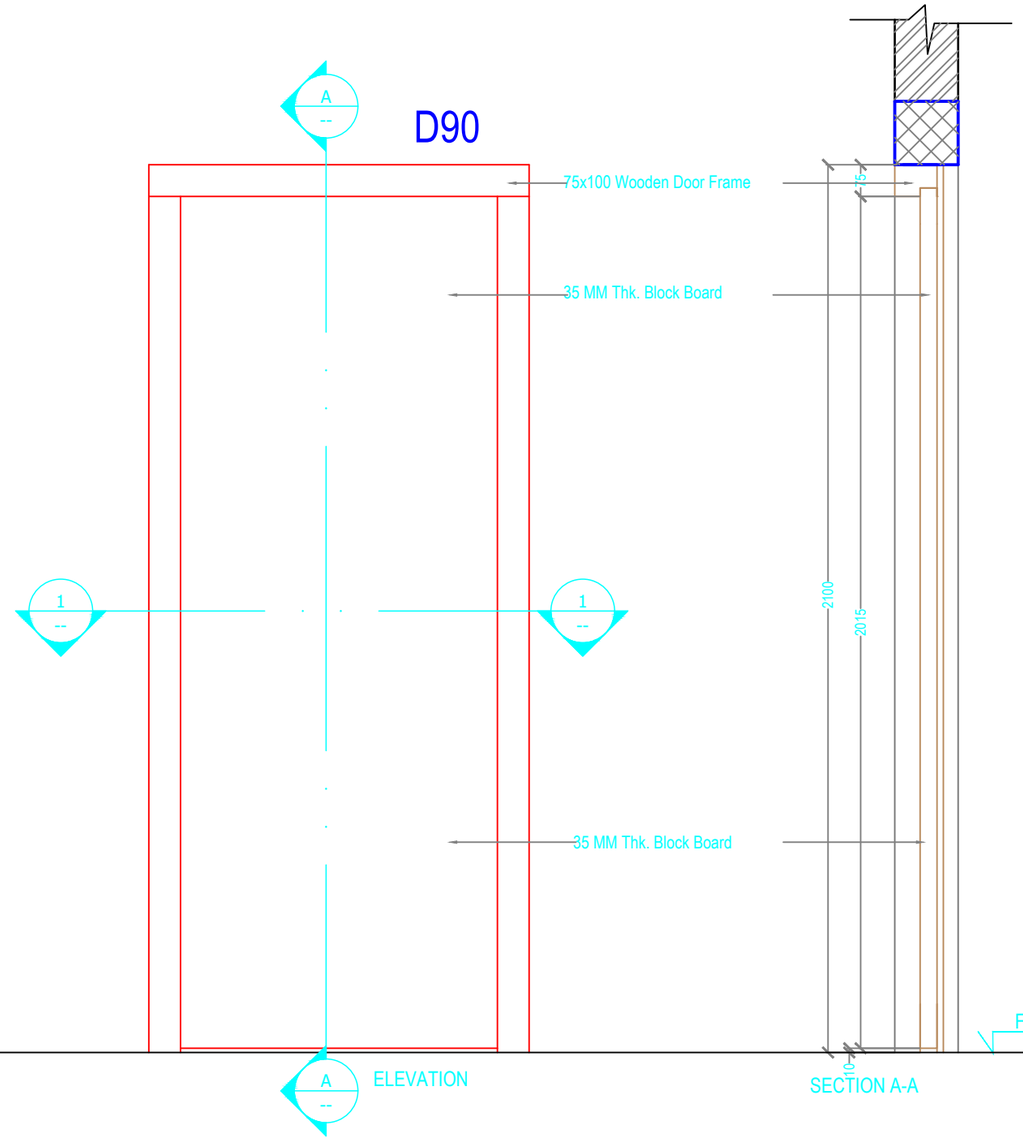

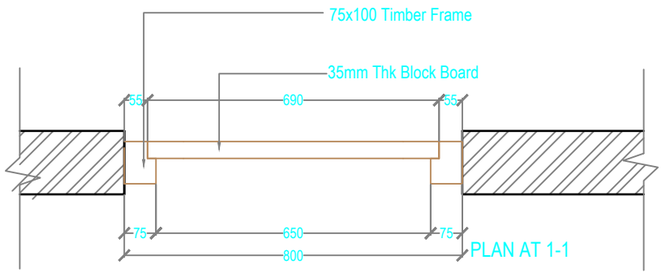

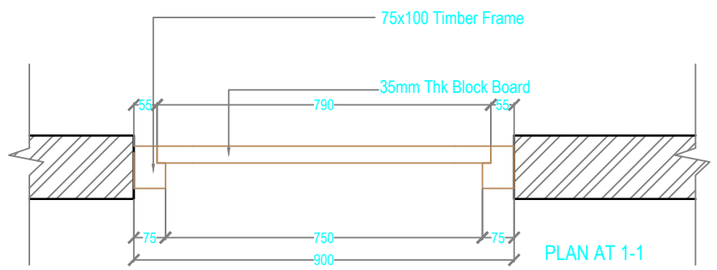

Khorlochhu

ARCHITECTURAL DRAWING

PROJECT TITLE	DRAWING TITLE
Construction of Doksum Primary School	DOOR_DETAILS-D80_&_D90

NOTES

1. ALL DIMENSIONS ARE IN MILLIMETER & ELEVATION IN METER UNLESS SPECIFIED OTHERWISE.
2. ALL DIMENSIONS MEASURE UNFINISHED SURFACES UNLESS SPECIFIED OTHERWISE.
3. DIMENSIONS ARE TO BE READ AND NOT SCALED OFF.
4. ANY DISCREPANCIES IN THE DRAWING ARE TO BE BROUGHT TO THE IMMEDIATE NOTICE OF THE SUPERVISION TEAM.

CHECKED	APPROVED	DATE	DRAWING NO.
			AR_15
		MARCH, 2026	SCALE
			NTS

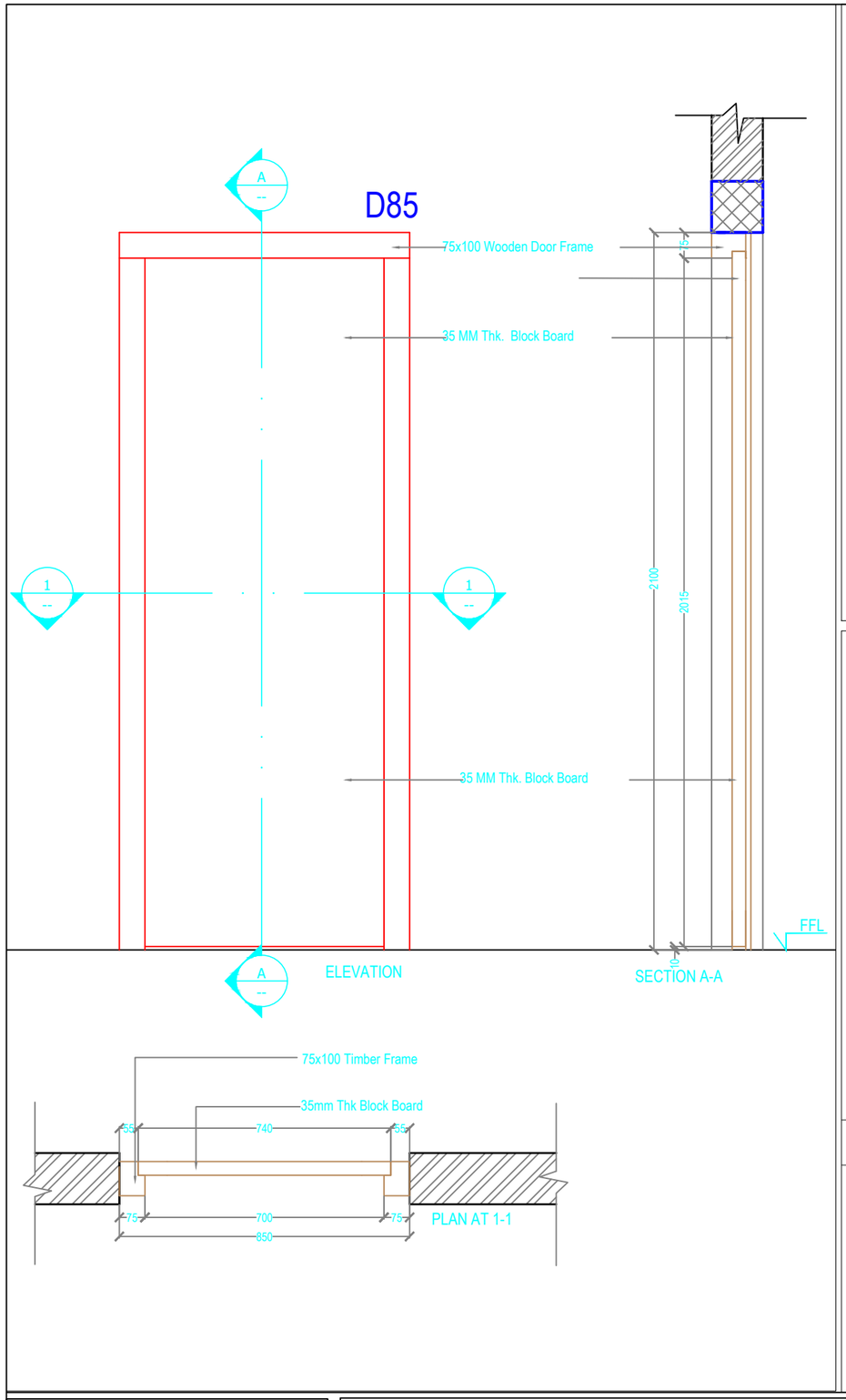

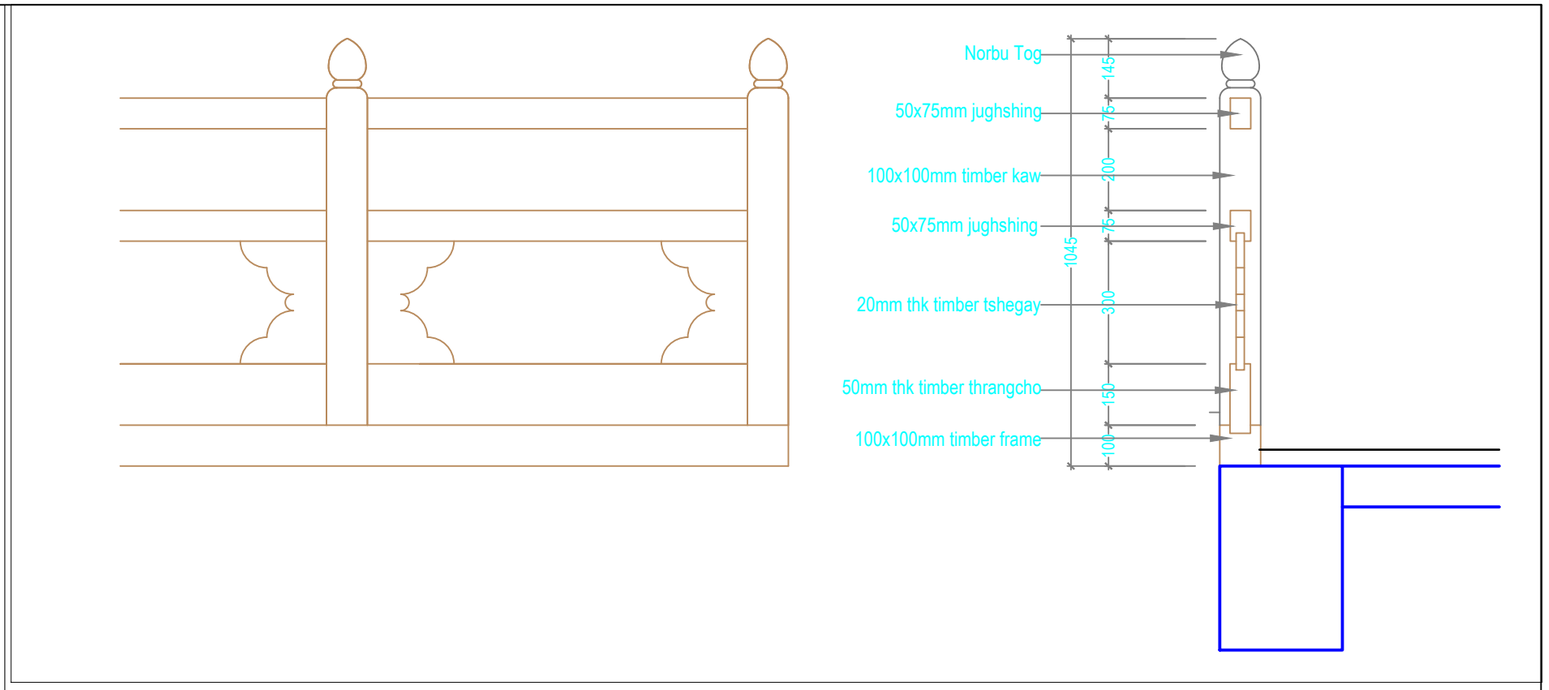

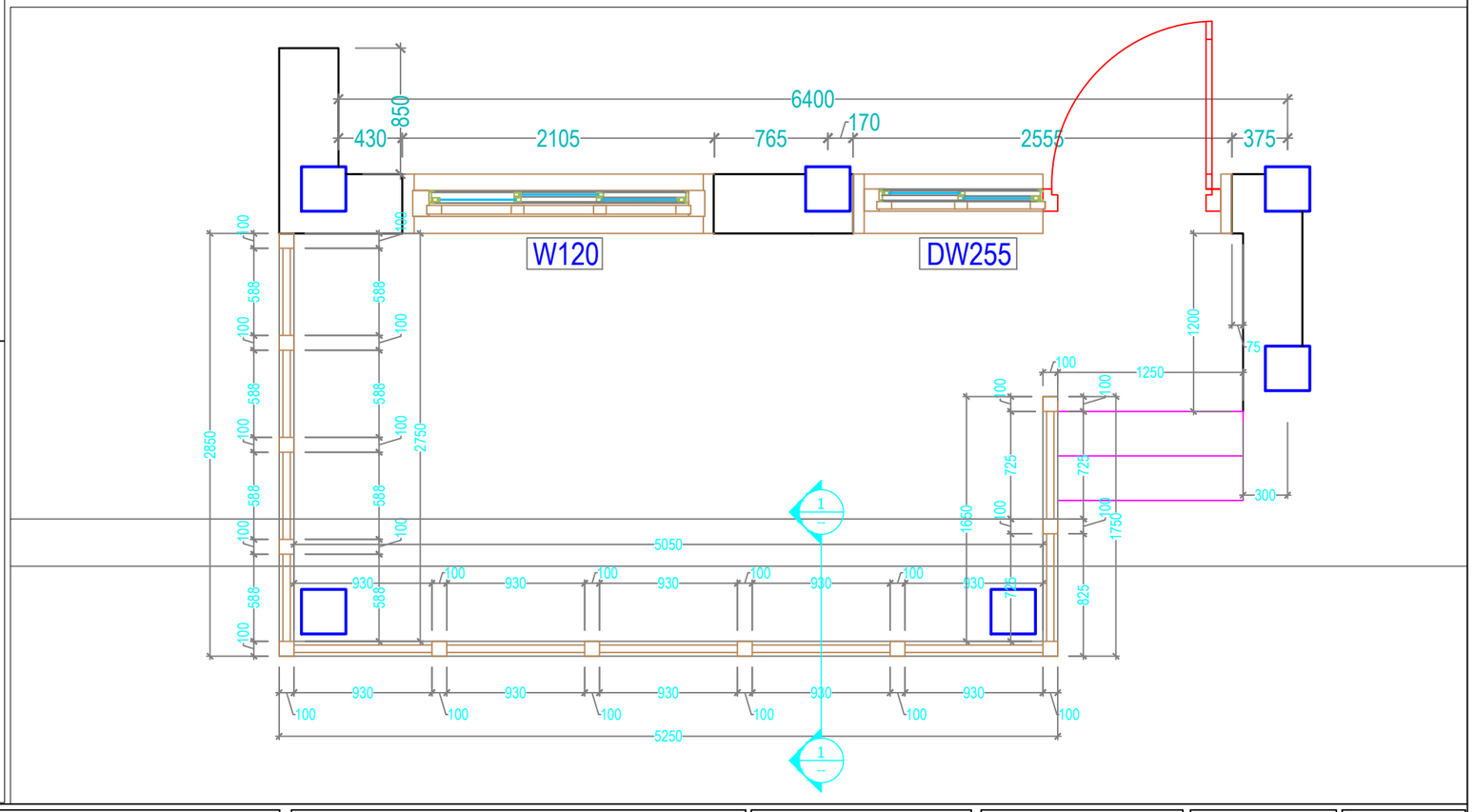

Khorlochhu

ARCHITECTURAL DRAWING

PROJECT TITLE	DRAWING TITLE
Construction of Doksum Primary School	DOOR_DETAILS-D85_&_RAILING_DETAILS

NOTES

1. ALL DIMENSIONS ARE IN MILLIMETER & ELEVATION IN METER UNLESS SPECIFIED OTHERWISE.
2. ALL DIMENSIONS MEASURE UNFINISHED SURFACES UNLESS SPECIFIED OTHERWISE.
3. DIMENSIONS ARE TO BE READ AND NOT SCALED OFF.
4. ANY DISCREPANCIES IN THE DRAWING ARE TO BE BROUGHT TO THE IMMEDIATE NOTICE OF THE SUPERVISION TEAM.

CHECKED	APPROVED	DATE	DRAWING NO.
			AR_16
		MARCH, 2026	SCALE
			NTS

PLUMBING DRAWINGS

PRINCIPAL QUARTER

Owner - Khorlochhu Hydro Power Limited
Location - Doksum New Township, Trashiyangtse

Khorlochhu

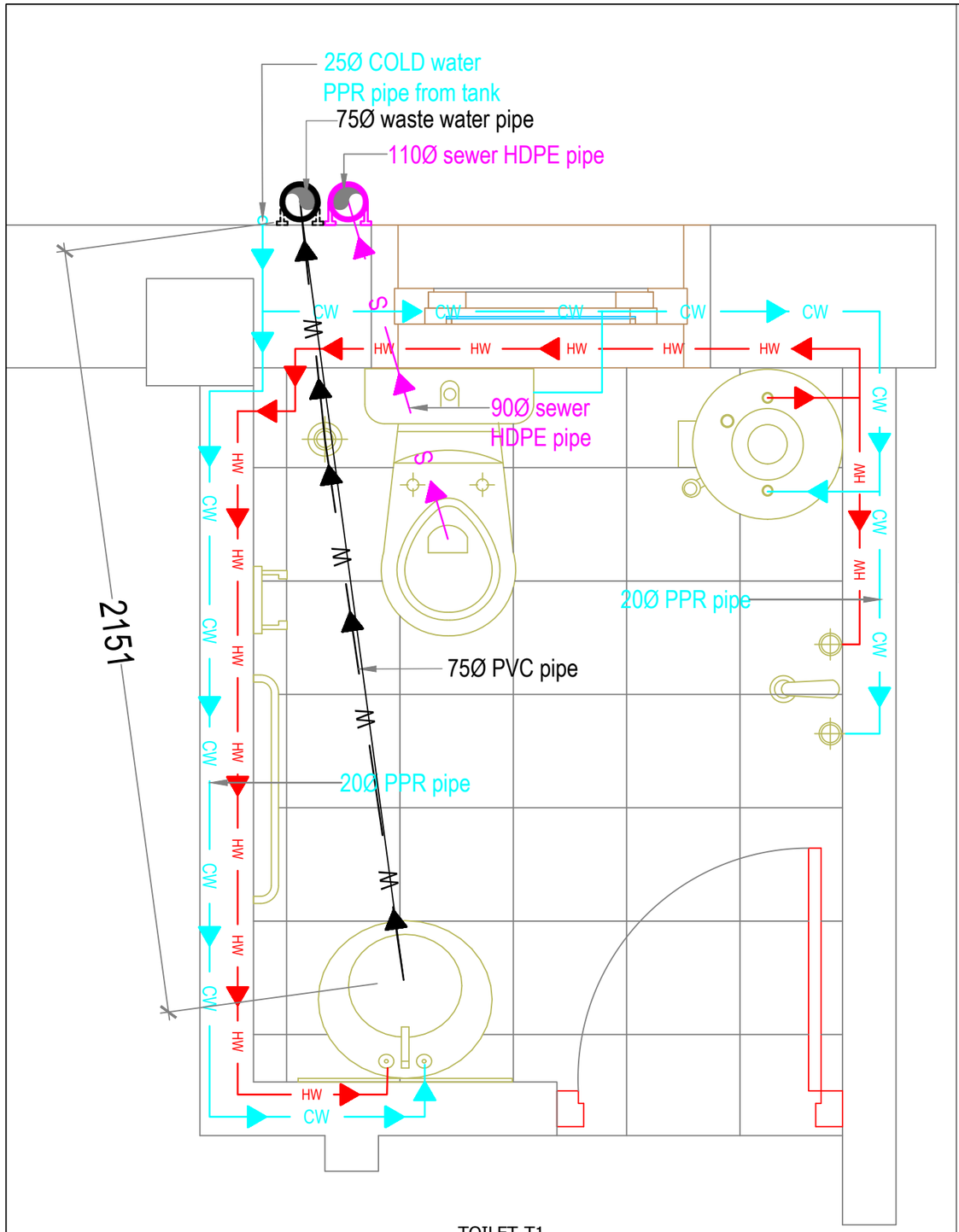

TOILET-T1

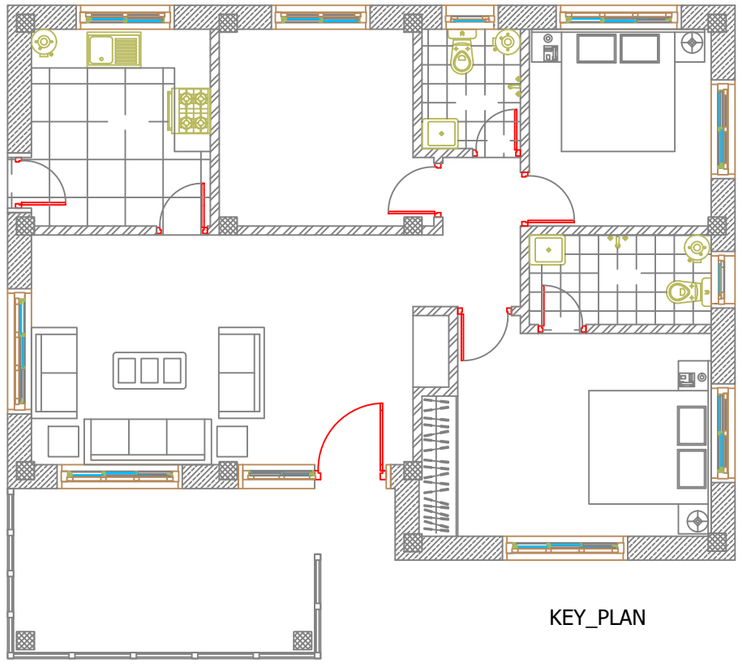

KEY_PLAN

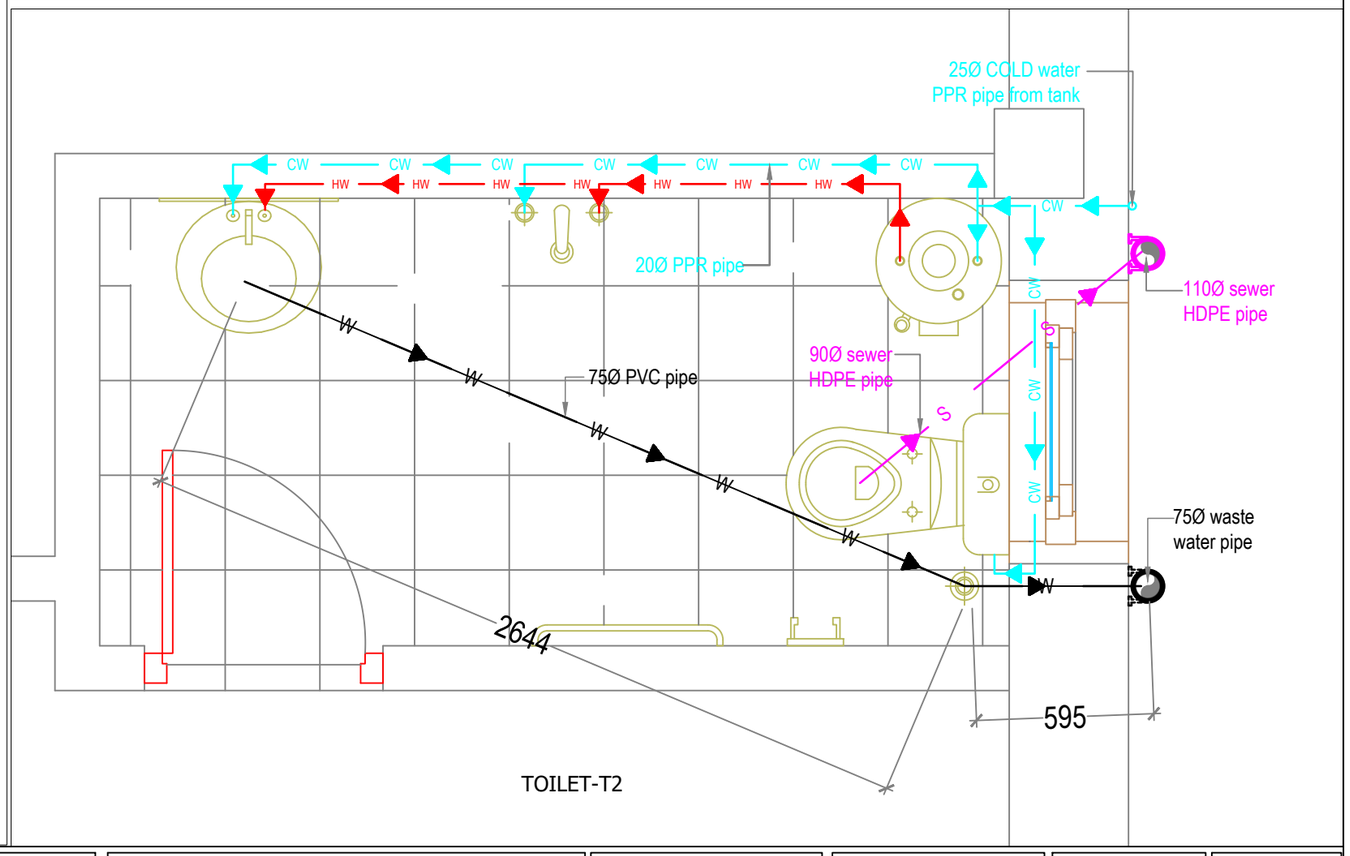

TOILET-T2

Khorlochhu

ARCHITECTURAL DRAWING

PROJECT TITLE	DRAWING TITLE
Construction of Doksum Primary School	WATER_SUPPLY_&_WASTE_WATER_LAYOUT

NOTES

1. ALL DIMENSIONS ARE IN MILLIMETER & ELEVATION IN METER UNLESS SPECIFIED OTHERWISE.
2. ALL DIMENSIONS MEASURE UNFINISHED SURFACES UNLESS SPECIFIED OTHERWISE.
3. DIMENSIONS ARE TO BE READ AND NOT SCALED OFF.
4. ANY DISCREPANCIES IN THE DRAWING ARE TO BE BROUGHT TO THE IMMEDIATE NOTICE OF THE SUPERVISION TEAM.

CHECKED	APPROVED	DATE	DRAWING NO.
			PB_01
		MARCH, 2026	SCALE
			NTS

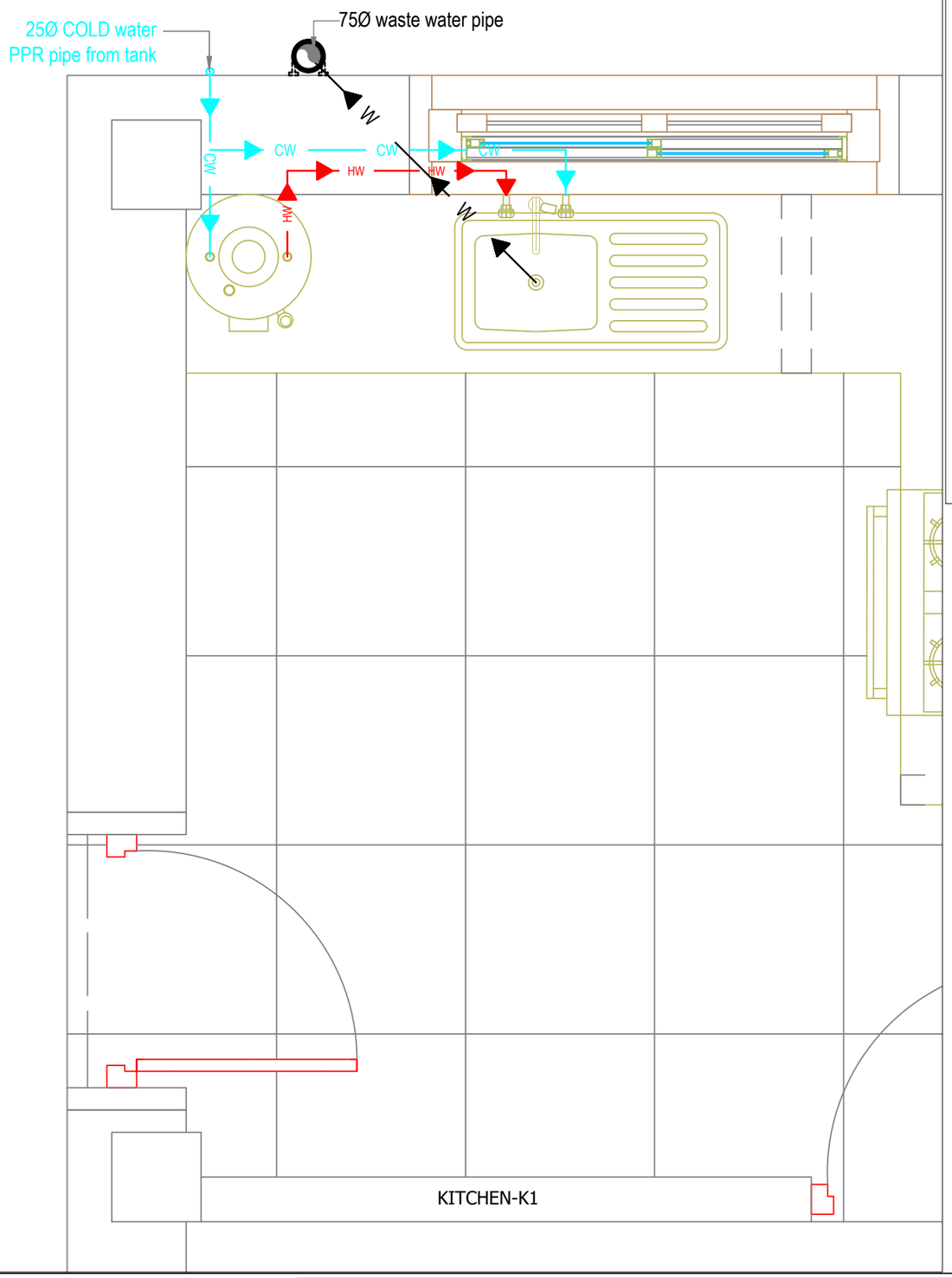

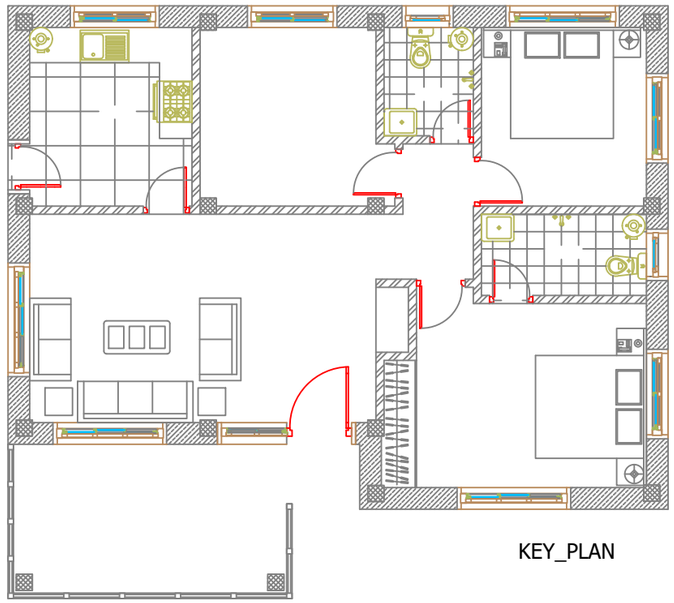

Khorlochhu

ARCHITECTURAL DRAWING

PROJECT TITLE	DRAWING TITLE
Construction of Doksum Primary School	WATER_SUPPLY_&_WASTE_WATER_LAYOUT

NOTES

1. ALL DIMENSIONS ARE IN MILLIMETER & ELEVATION IN METER UNLESS SPECIFIED OTHERWISE.
2. ALL DIMENSIONS MEASURE UNFINISHED SURFACES UNLESS SPECIFIED OTHERWISE.
3. DIMENSIONS ARE TO BE READ AND NOT SCALED OFF.
4. ANY DISCREPANCIES IN THE DRAWING ARE TO BE BROUGHT TO THE IMMEDIATE NOTICE OF THE SUPERVISION TEAM.

CHECKED	APPROVED	DATE	DRAWING NO.
		MARCH, 2026	PB_02
			SCALE
			NTS

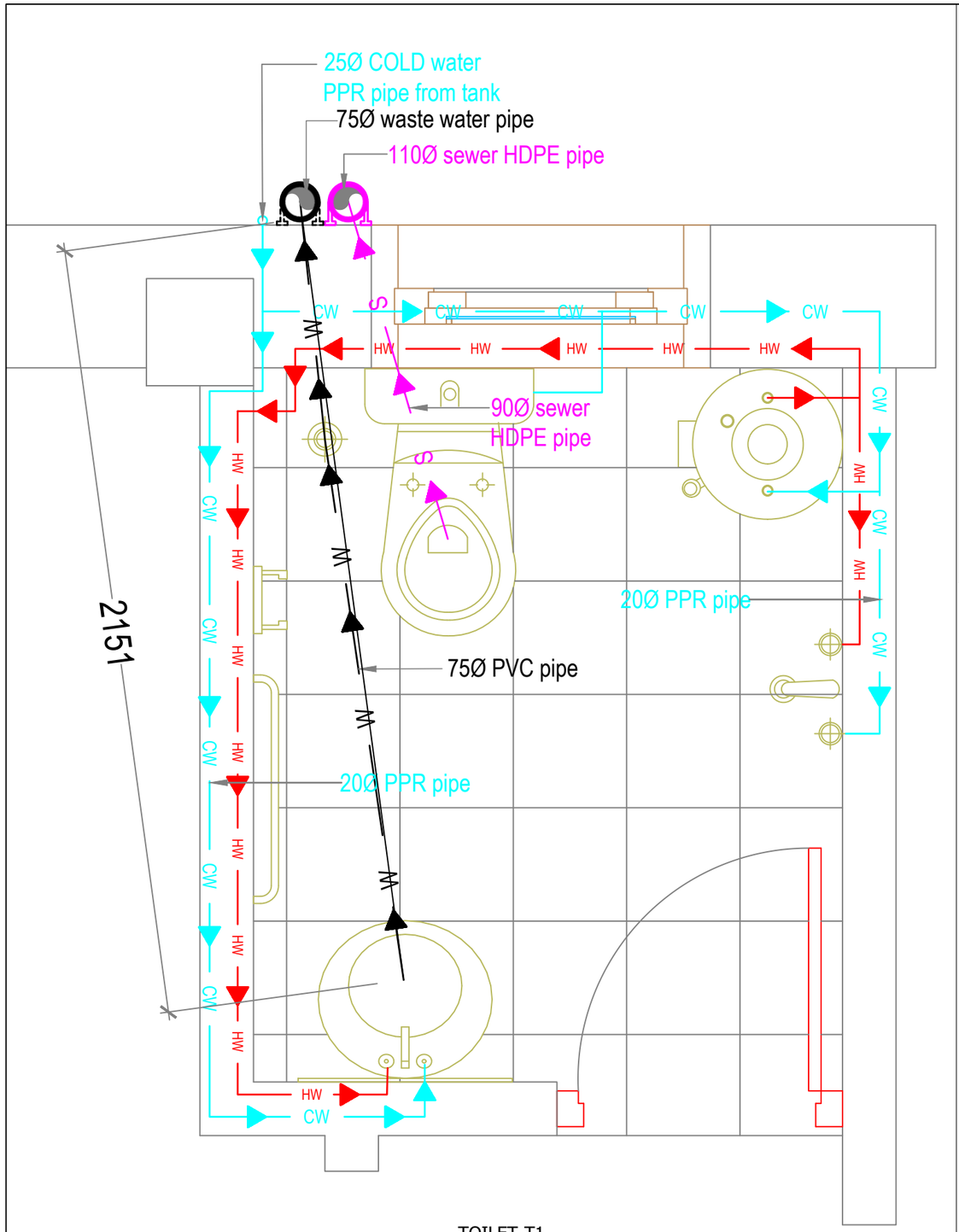

TOILET-T1

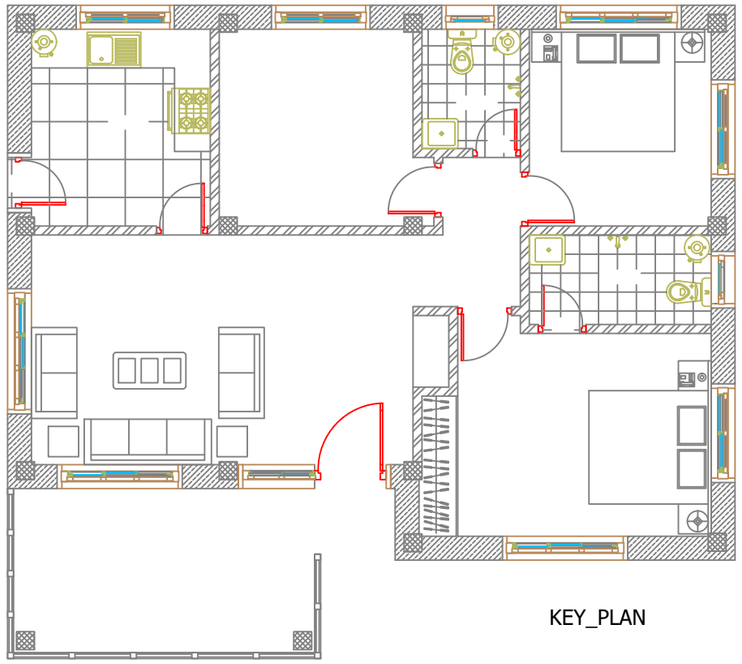

KEY_PLAN

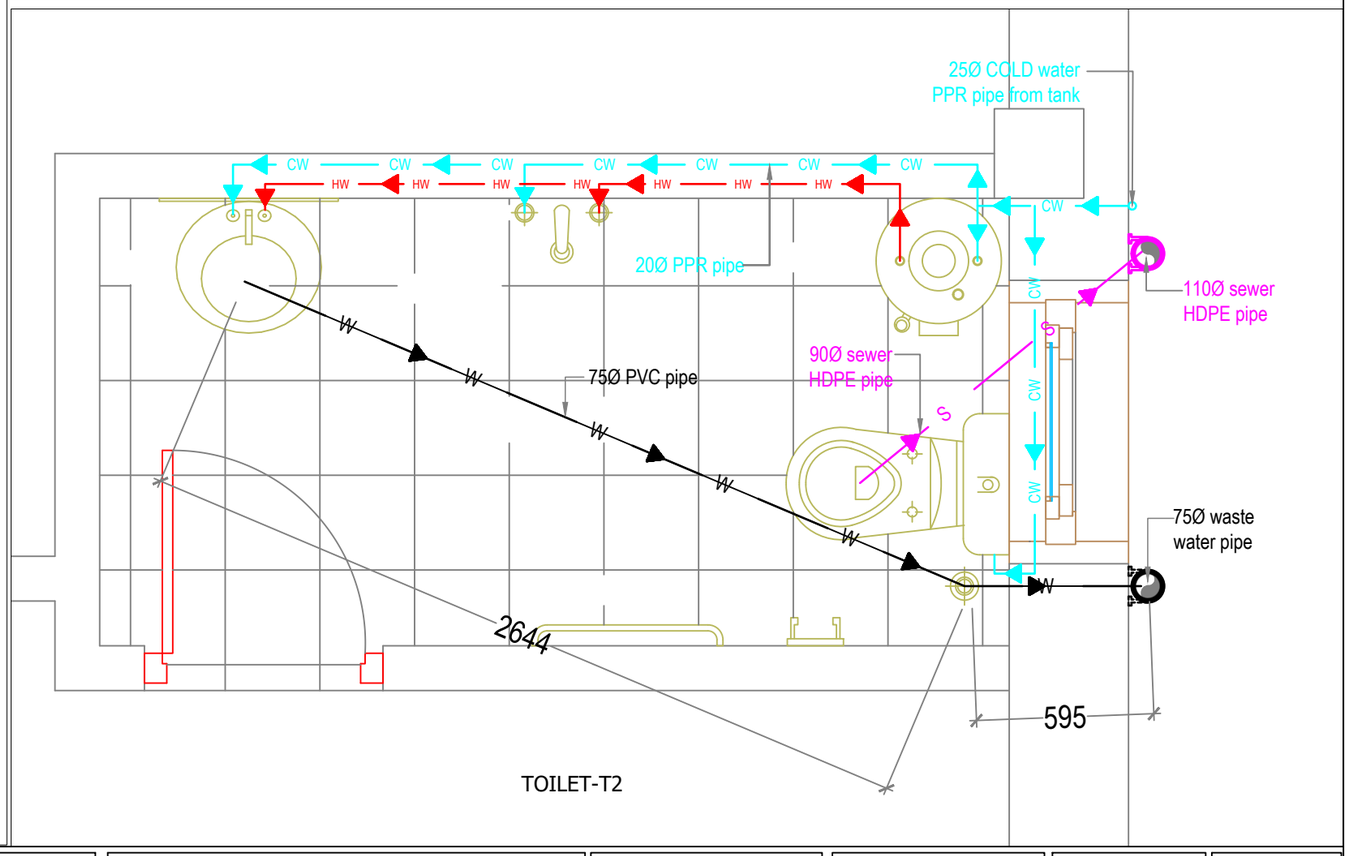

TOILET-T2

Khorlochhu

ARCHITECTURAL DRAWING

PROJECT TITLE	DRAWING TITLE
Construction of Doksum Primary School	SEWER_LINE_LAYOUT

NOTES

1. ALL DIMENSIONS ARE IN MILLIMETER & ELEVATION IN METER UNLESS SPECIFIED OTHERWISE.
2. ALL DIMENSIONS MEASURE UNFINISHED SURFACES UNLESS SPECIFIED OTHERWISE.
3. DIMENSIONS ARE TO BE READ AND NOT SCALED OFF.
4. ANY DISCREPANCIES IN THE DRAWING ARE TO BE BROUGHT TO THE IMMEDIATE NOTICE OF THE SUPERVISION TEAM.

CHECKED	APPROVED	DATE	DRAWING NO.
			PB_03
		MARCH, 2026	SCALE
			NTS

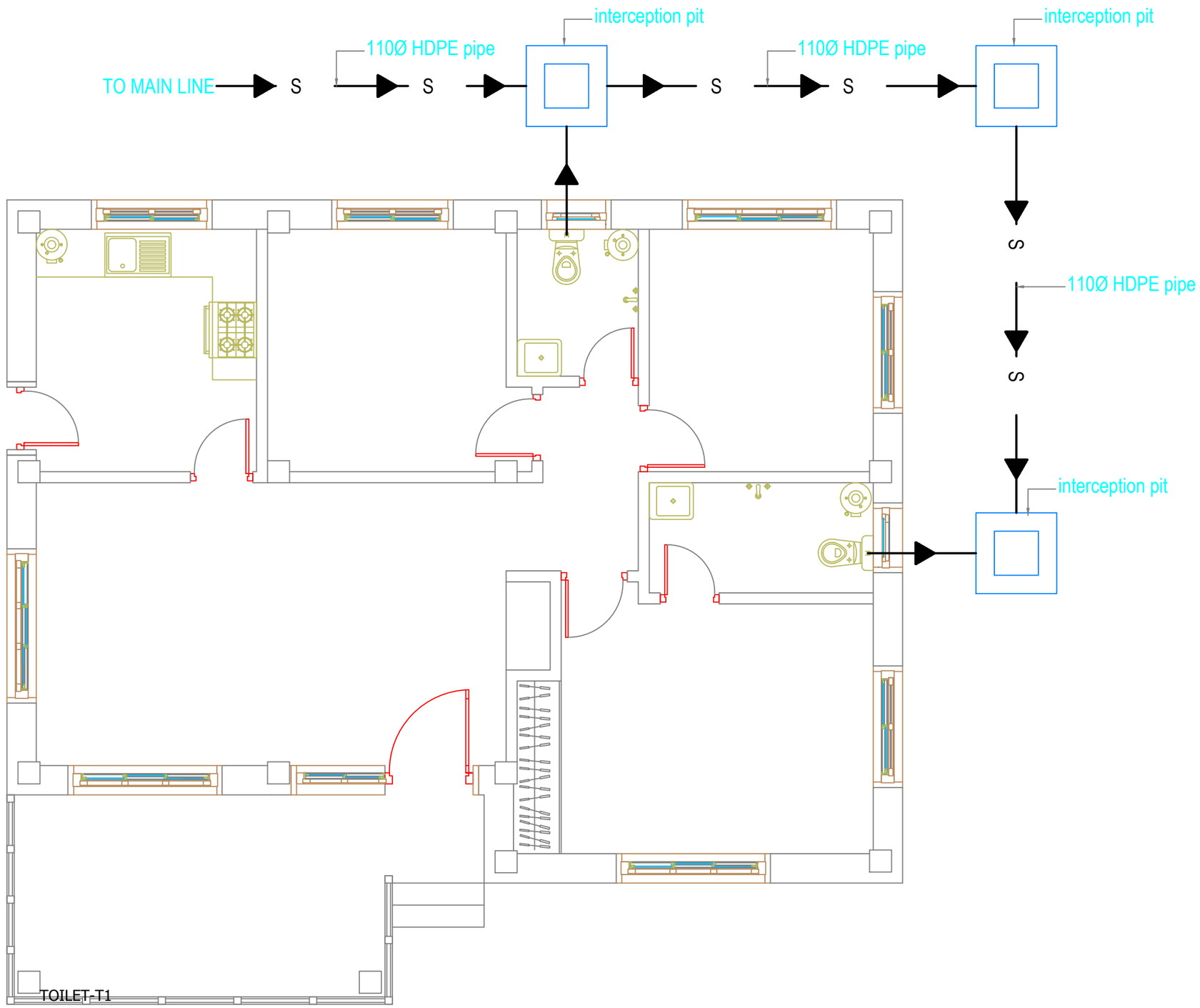

Khorlochhu

ARCHITECTURAL DRAWING

PROJECT TITLE	DRAWING TITLE
Construction of Doksum Primary School	OVERALL_SEWER_LINE_LAYOUT

NOTES

1. ALL DIMENSIONS ARE IN MILLIMETER & ELEVATION IN METER UNLESS SPECIFIED OTHERWISE.
2. ALL DIMENSIONS MEASURE UNFINISHED SURFACES UNLESS SPECIFIED OTHERWISE.
3. DIMENSIONS ARE TO BE READ AND NOT SCALED OFF.
4. ANY DISCREPANCIES IN THE DRAWING ARE TO BE BROUGHT TO THE IMMEDIATE NOTICE OF THE SUPERVISION TEAM.

CHECKED	APPROVED	DATE	DRAWING NO.
			PB_04
		MARCH, 2026	SCALE
			NTS

STRUCTURAL DRAWINGS

PRINCIPALS QUARTER

Owner - Khorlochhu Hydro Power Limited
Location - Doksum New Township, Trashiyangtse

Khorlochhu

TECHNICAL NOTES

GENERAL NOTES FOR STRUCTURAL DRAWINGS.

A. GENERAL

1. STRUCTURAL DRAWINGS SHALL BE READ IN CONJUNCTION WITH ARCHITECTURAL DRAWINGS AND OTHER ENGINEERS' DRAWINGS AND SPECIFICATIONS AND SUCH OTHER WRITTEN INSTRUCTIONS MAY BE ISSUED.
2. ALL DIMENSIONS ARE IN MM AND RELATIVE LEVEL IN M UNLESS STATED OTHERWISE.
3. DIMENSIONS SHALL NOT BE SCALED FROM THE DRAWINGS.
4. DESIGN CONFORMS TO:
   (a). IS 4326:1993 EARTHQUAKE RESISTANT DESIGN AND CONSTRUCTION OF BUILDINGS.
   (b). IS 456:2000 CODE OF PRACTICE FOR PLAIN & REINFORCED CONCRETE.
   (c). IS13930:1993 DUCTILE DETAILING OF REINFORCED CONCRETE STRUCTURES SUBJECTED TO SEISMIC FORCES.
   (d).BUILDING CODE OF BHUTAN 2003
   (e). IS1893:2002 SEISMIC RESISTANT DESIGN OF STRUCTURES.
   (f). IS 800, SP 38 (S&T)-1987
5. VERIFY ALL SETTING OUT DIMENSIONS WITH ENGINEER/ARCHITECT.
6. REFER ANY DISCREPANCY TO ENGINEER/ARCHITECT BEFORE PROCEEDING THE WORK.
7. ALL CONSTRUCTION MATERIAL SAND WORKMANSHIP SHALL COMPLY WITH THE SPECIFICATIONS FOR BUILDING AND ROAD WORKS TOGETHER WITH THE REQUIREMENTS OF ALL RELEVANT CODES OF PRACTICE REFERRED TO HEREIN AND THE REQUIREMENTS OF ALL STATUTORY AUTHORITIES.
8. ALWAYS REFER ADDITIONAL NOTES PROVIDED IN THE DRAWINGS.

B. FOUNDATIONS AND FOOTINGS.

1. FOOTINGS ARE DESIGNED FOR AN ALLOWABLE BEARING CAPACITY OF 150 KN/Sq M.
2. WALLS SHALL BE PROVIDED BELOW THE EXTERIOR PLINTH BEAM. IT IS RECOMMENDED TO PROVIDE THE SAME BELOW THE INTERNAL PLINTH BEAM.
3. FOOTINGS ARE DESIGNED CONSIDERING THE MINIMUM DEPTH OF 1500MM BELOW THE ORIGINAL GROUND LEVEL. NOTIFY ENGINEER SHOULD THE DEPTH OF FOOTINGS REQUIRED TO BE PROVIDED IS MORE THAN THE DEPTH SPECIFIED ABOVE.
4. ALL CONCRETE SHALL BE PLACED 'IN THE DRY FOR FOUNDATIONS.
5. COMPACTION OF FOUNDATION SHALL BE APPROVED BY ENGINEER PRIOR TO PLACEMENT OF CONCRETE.

C. LOADING

1. THIS STRUCTURE HAS BEEN DESIGNED FOR THE FOLLOWING LOADS.
   (a). DEAD LOADS;

UNIT WEIGHT OF CONCRETE BLOCK BRICK	16.79KN/M3
UNIT WEIGHT OF RCC	25KN/M3
UNIT WEIGHT OF PCC	24KN/M3
UNIT WEIGHT OF STONE	28KN/M3

   (b). SUPERIMPOSED (LIVE LOADS)

LIVE LOAD FOR GROUND FLOORS	3KN/M2
LIVE LOAD ON ROOF	0.75 KN/M2

   (c). WIND LOAD
   WIND PRESSURE 45.6M/S (AS CALCULATED)
   (d). OTHER LOADS:
   EARTHQUAKE LOAD IN ACCORDANCE WITH IS 1893:2002 ASSUMING ZONE V
   SUPERIMPOSED DEAD LOAD 1KN/M2
2. MAINTAIN STRUCTURE IN STABLE CONDITION DURING CONSTRUCTION.
3. DO NOT PLACE OR STORE BUILDING MATERIALS ON CONCRETE MEMBERS WITHOUT ENGINEER'S APPROVAL.

D. CONCRETE.

1. CONCRETE QUALITY SHALL COMPLY WITH IS 456:2000
2. PROJECT ASSESSMENT OF CONCRETE STRENGTH IS REQUIRED.
3. GRADE OF CONCRETE IS M20 FOR ALL RCC WORKS.
4. FOR THE ABOVE GRADE TO BE ACHIEVED, MAXIMUM FREE WATER-CEMENT RATIO SHALL BE 0.55, MINIMUM CEMENT CONTENT SHALL BE 300KG/M3 AND MAXIMUM AMOUNT OF WATER SHALL BE 180L.
5. WATER USED FOR MIXING AND CURING SHALL COMPLY WITH CLAUSE 5.4 OF IS 456:2000.

6. MECHANICALLY VIBRATE CONCRETE IN THE FORM TO GIVE MAXIMUM COMPACTION WITHOUT SEGREGATION OF THE CONCRETE.
7. CURE CONCRETE AS REQUIRED BY THE CLAUSE 13.5 OF IS456:2000 AND WORK SPECIFICATIONS.
8. CONCRETE SIZES AS DRAWN ARE MINIMUM AND DO NOT INCLUDE APPLIED FINISHES.
9. DO NOT MAKE UNSPECIFIED HOLES OR CHASES WITHOUT ENGINEER'S APPROVAL.
10. DO NOT PLACE CONDUITS, PIPES AND THE LIKE WITHIN COVER CONCRETE.
11. AGGREGATES SHALL COMPLY WITH CLAUSE 5.3 OF IS456:2000. NOMINAL SIZE OF COARSE AGGREGATES SHALL BE 20MM.
12. THE CHARACTERISTICS STRENGTH OF CONCRETE AT 28 DAYS SHALL BE 25MPA. NOTE THAT THE MEAN COMPRESSIVE STRENGTH OBTAINED FROM THE LABORATORY HAS TO BE WELL ABOVE THIS VALUE.
13. ALL FORMWORKS FOR BEAMS AND SLABS ARE TO REMOVED BEFORE CONSTRUCTION OF WALLS OR OTHER PERMANENT LOADINGS. ALL FORMWORK AND ITS REMOVAL MUST BE IN ACCORDANCE TO IS 456:2000.

E. REINFORCEMENT.

1. GRADE OF STEEL USED FOR RCC WORKS SHALL BE Fe500
2. BAR NOTATION GIVES THE FOLLOWING INFORMATION IN THIS ORDER: NUMBER OF BARS BAR SIZE(MM),SPACING(MM, IF REQUIRED).
3. REINFORCEMENT IS REPRESENTED DIAGRAMMATICALLY AND NOT NECESSARILY IN TRUE PROJECTION.
4. LAP REINFORCEMENT ONLY AT LOCATIONS SHOWN IN THE DRAWINGS. LAP LENGTH SHALL COMPLY WITH IS456:2000. LAP SPLICES SHALL NOT BE LESS THAN THE DEVELOPMENT LENGTH IN TENSION(GENERALLY 47Ø).
5. REINFORCEMENT SHALL NOT BE CUT, BENT OR HEATED ON SITE WITHOUT ENGINEER'S APPROVAL.
6. THE DEVIATION OF REINFORCEMENT FROM ITS SPECIFIED POSITION SHALL NOT EXCEED THE FOLLOWING(MM)
   (a). TOLERANCE FOR COVER -0,+10MM. WHERE A NEGATIVE VALUE INDICATE A DECREASE IN SPECIFIED COVER, AND POSITIVE VALUE INDICATES AN INCREASE IN COVER.
   (b). TOLERANCE ON PLACEMENT OF REINFORCEMENT.
   FOR SLABS AND STAIRCASE -10,+10MM.
   FOR BEAMS, COLUMNS AND FOUNDATION -15,+15MM.
7. SPACERS AND SUPPORTS SHALL BE LOCATED AT CENTERS CLOSE ENOUGH (PREFERABLY NOT EXCEEDING 750MM C/C FOR COLUMN AND BEAM REINFORCEMENT AND 450MM FOR SLAB REINFORCEMENT). TO PREVENT DISPLACEMENT OF REINFORCEMENT BY WORKMEN OR EQUIPMENT DURING FIXING AND SUBSEQUENT CONCERT PLACEMENT WITHIN TOLERANCE GIVEN ABOVE.
8. THE COVER TO THE REINFORCEMENT NEAREST THE CONCRETE SURFACE SHALL NOT LESS THAN THE FOLLOWING EXCEPT WHERE SPECIFIED OTHERWISE:

BEAMS	30MM
COLUMNS	40MM
FLOOR SLABS AND STAIRCASE	20MM
FOUNDATION	50MM

9. BENDING OF REINFORCEMENT IN BEAMS AND COLUMNS SHALL COMPLY WITH THE REQUIREMENTS OF IS 456:2000
10. FORMWORK SHALL COMPLY WITH CLAUSE 11 OF IS 456:2000
11. STRIPPING OF FORMWORK SHALL COMPLY WITH CLAUSE 11.3 OF IS:456:2000

F. WELDING AND BOLTING.

1. WELDING TO BE CARRIED OUT IN ACCORDANCE WITH IS 816:1969, IS 819:1957, IS 1024:1979, IS 1261:1959, IS 1323:1982 AND IS: 9595: 1980 AS APPROPRIATE.
2. THE STRENGTH OF ELECTRODE USED FOR WELDING SHALL BE EQUAL TO OR GREATER THAN THE STRENGTH OF MEMBER THAT IS BEING WELDED.
3. ALL WELD SHALL BE COMPLETE PENETRATION BUTT WELD.
4. ALL BOLTS SHALL BE HIGH STRENGTH FRICTION GRIP GALVANIZED M16 AND M20 IN ACCORDANCE WITH IS 3757:1967 AND IS 800: 1984.
5. ALL MEMBERS OF STEEL TRUSS SHALL BE DRY AND THOROUGHLY CLEANED FROM ALL LOOSE SCALE AND RUST PRIOR TO PAINTING.
6. THE MEMBERS SHALL BE PROVIDED WITH COAT OF ZINC COATING.

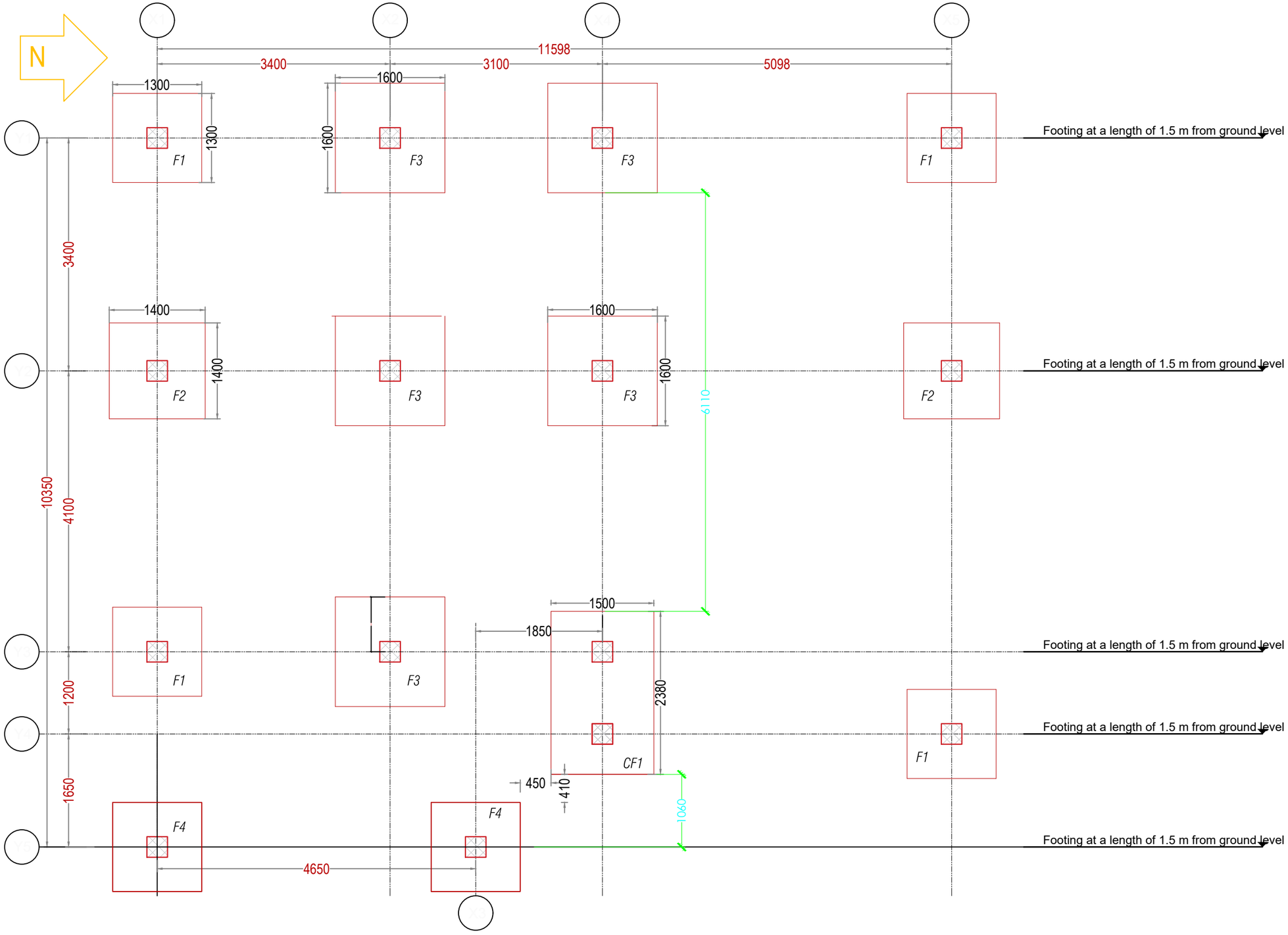

Footing Layout Plan

Khorlochhu

STRUCTURAL DRAWING

PROJECT TITLE	DRAWING TITLE
Construction of Doksum Primary School	FOOTING_PLAN_LAYOUT

NOTES

1. ALL DIMENSIONS ARE IN MILLIMETER & ELEVATION IN METER UNLESS SPECIFIED OTHERWISE.
2. ALL DIMENSIONS MEASURE UNFINISHED SURFACES UNLESS SPECIFIED OTHERWISE.
3. DIMENSIONS ARE TO BE READ AND NOT SCALED OFF.
4. ANY DISCREPANCIES IN THE DRAWING ARE TO BE BROUGHT TO THE IMMEDIATE NOTICE OF THE SUPERVISION TEAM.

CHECKED	APPROVED	DATE	DRAWING NO.
			STR_03
		MARCH, 2026	SCALE
			NTS

NOTES: -
Slope made according to the gradient of the master plan, each at a counter of 1m from existing.

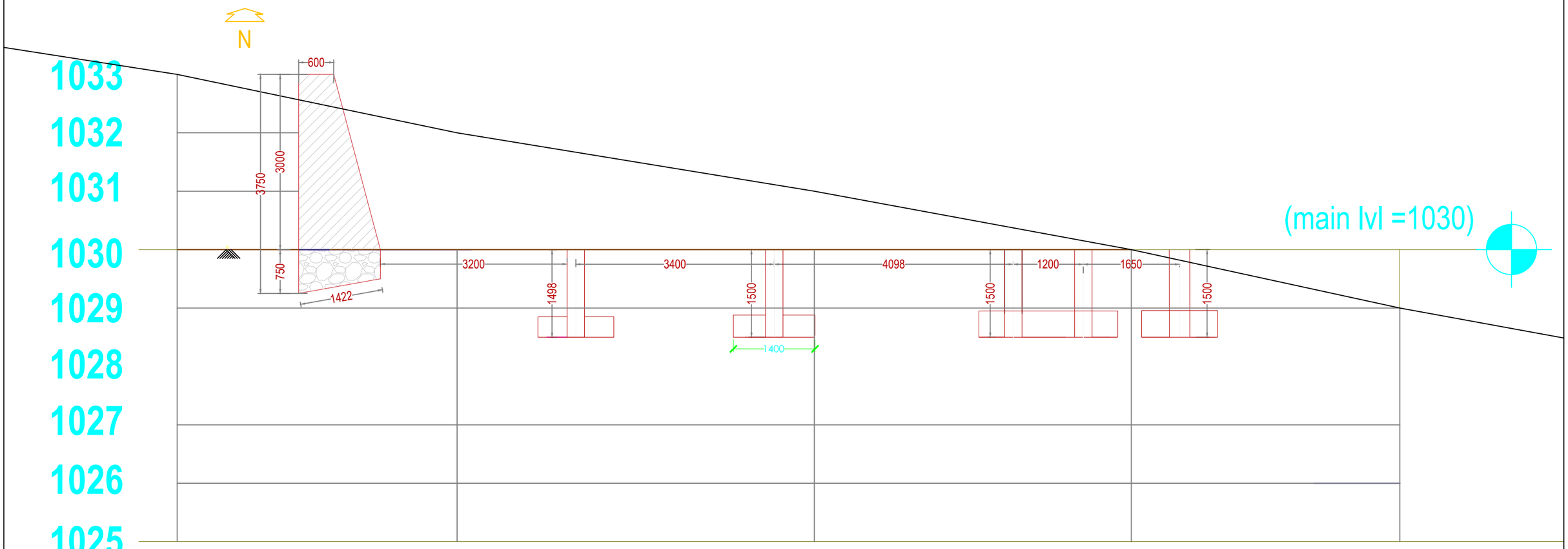

Footing Elevation Layout

Khorlochhu

STRUCTURAL DRAWING

PROJECT TITLE	DRAWING TITLE
Construction of Doksum Primary School	FOORING_ELEVATION_LAYOUT

NOTES

1. ALL DIMENSIONS ARE IN MILLIMETER & ELEVATION IN METER UNLESS SPECIFIED OTHERWISE.
2. ALL DIMENSIONS MEASURE UNFINISHED SURFACES UNLESS SPECIFIED OTHERWISE.
3. DIMENSIONS ARE TO BE READ AND NOT SCALED OFF.
4. ANY DISCREPANCIES IN THE DRAWING ARE TO BE BROUGHT TO THE IMMEDIATE NOTICE OF THE SUPERVISION TEAM.

CHECKED	APPROVED	DATE	DRAWING NO.
			STR_04
		MARCH, 2026	SCALE
			NTS

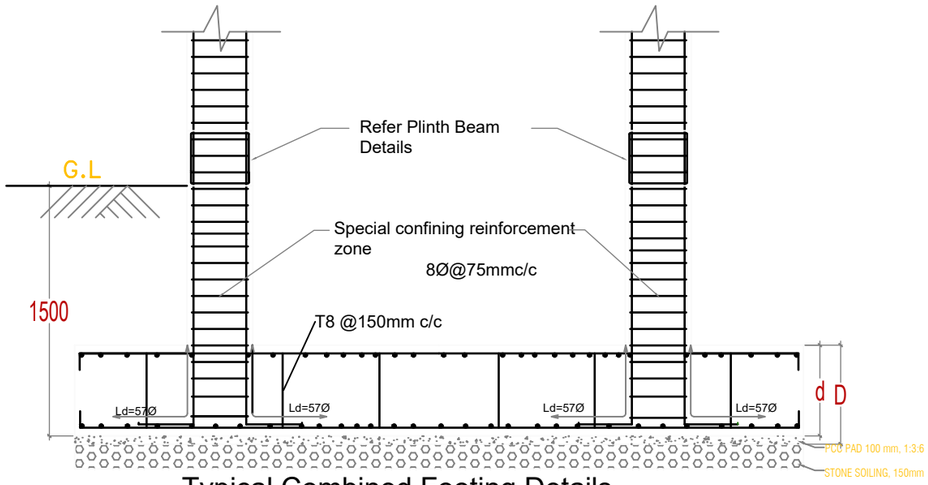

Typical Combined Footing Details
(Section A-A)

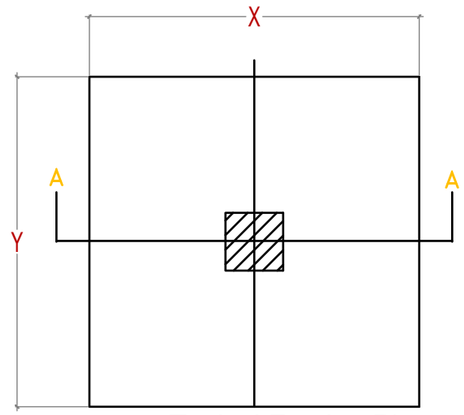

Typical Footing Plan

NOTES: -

The Bearing Capacity of soil is assumed as 150KN/m2 and at site, if any abnormalities in the soil conditions exist, please inform the Design Engineer at SPBD Office.

Grade of Concrete - M20

Grade of Steel - Fe500

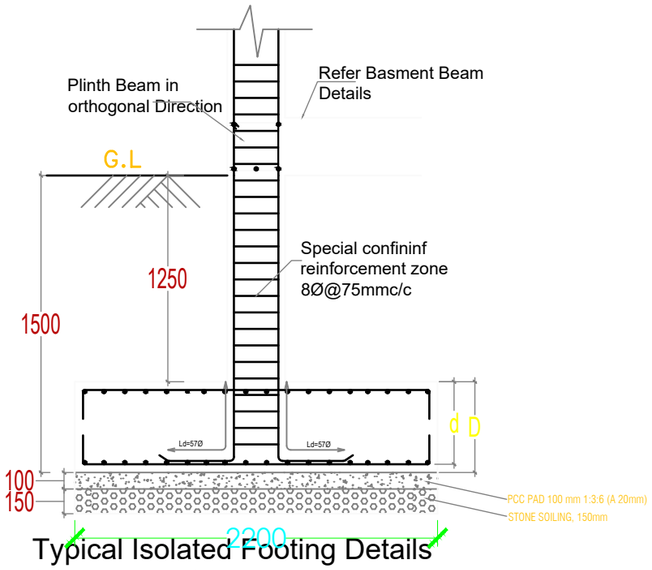

Typical Isolated Footing Details
(Section A-A)

FOOTING SCHEDULE

Footing Type	No.of footings	Size (X x Y)	Column Size (X x Y)	Depth	RFT BAR IN Bottom (Bothways)	RFT BAR IN Top (Bothways)
F1	4	1300 X 1300	300 x 300	350	12Ø@160 c/c	12Ø@200 c/c
F2	2	1400 X 1400	300 x 300	350	12Ø@170 c/c	12Ø@210 c/c
F3	5	1600 X 1600	300 x 300	350	12Ø@180 c/c	12Ø@220 c/c
F4	2	1300 X 1300	300 x 300	350	12Ø@160 c/c	12Ø@200 c/c
CF1	1	1500 X 2380	300 x 300	350	12Ø@210 c/c	12Ø@230 c/c

FOOTINGS SCHEDULE/TYPICAL DETAILS

Khorlochhu

STRUCTURAL DRAWING

PROJECT TITLE	DRAWING TITLE
Construction of Doksum Primary School	FOOTING_DETAILS

NOTES

1. ALL DIMENSIONS ARE IN MILLIMETER & ELEVATION IN METER UNLESS SPECIFIED OTHERWISE.
2. ALL DIMENSIONS MEASURE UNFINISHED SURFACES UNLESS SPECIFIED OTHERWISE.
3. DIMENSIONS ARE TO BE READ AND NOT SCALED OFF.
4. ANY DISCREPANCIES IN THE DRAWING ARE TO BE BROUGHT TO THE IMMEDIATE NOTICE OF THE SUPERVISION TEAM.

CHECKED	APPROVED	DATE	DRAWING NO.
		MARCH, 2026	STR_05
			SCALE
			NTS

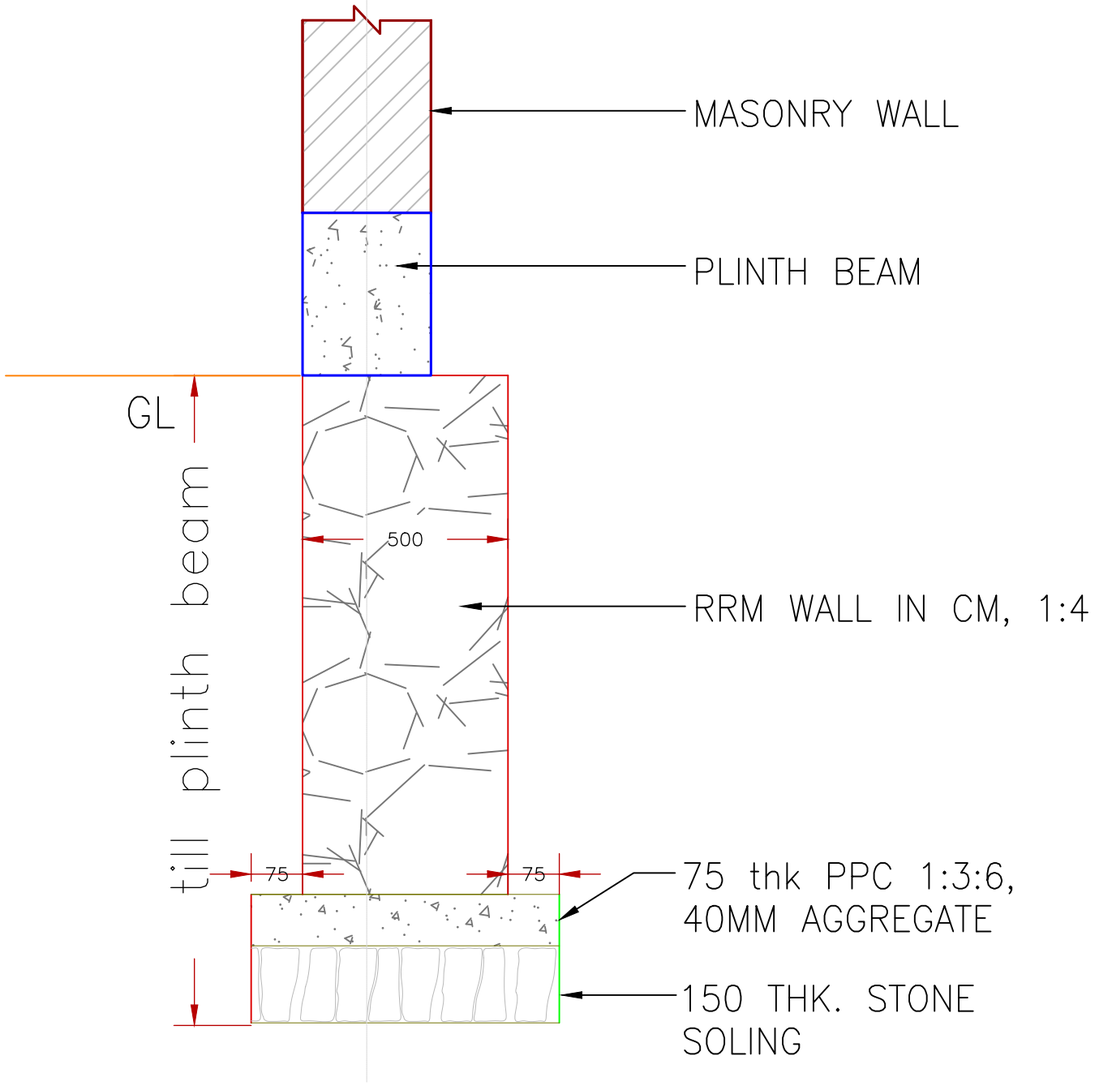

RRM WALL BELOW EXTERNAL PLINTH BEAM

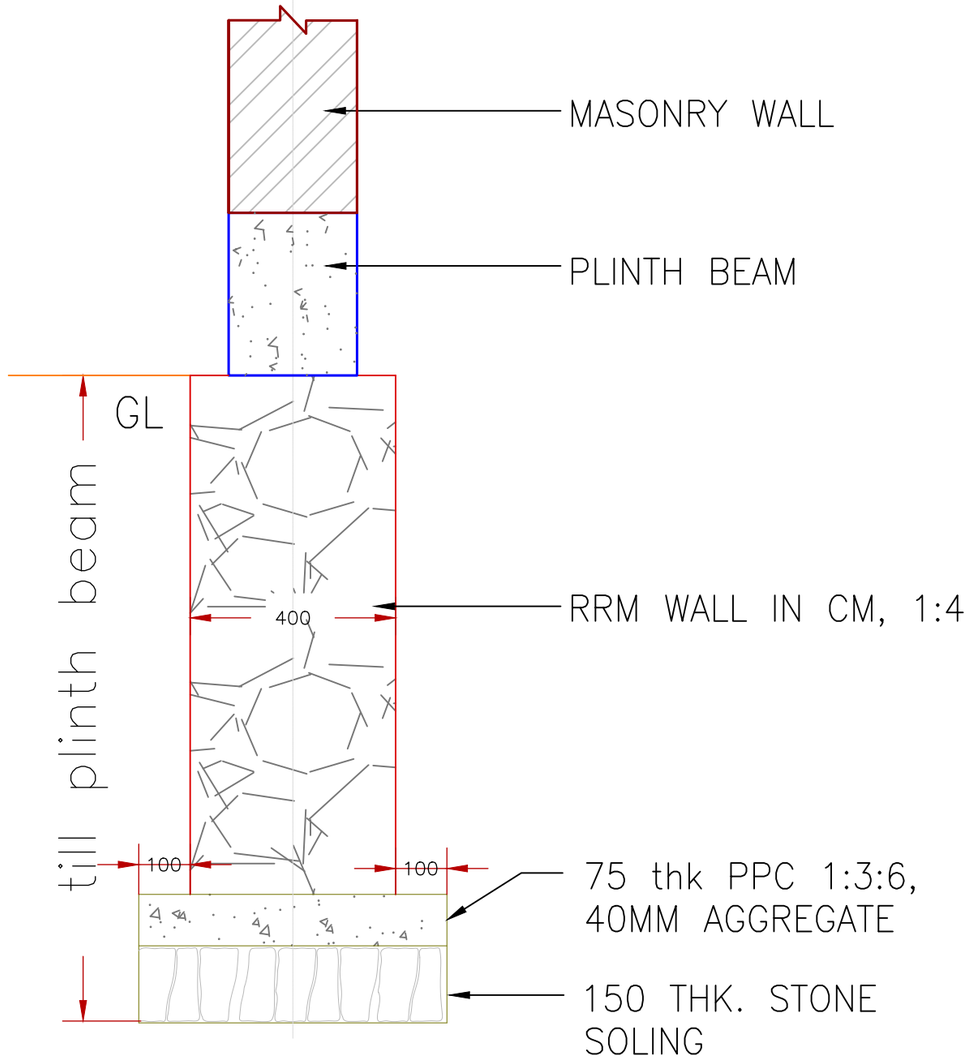

RRM WALL BELOW INTERNAL PLINTH BEAM

TYPICAL FOUNDATION WALL DETAILS

Khorlochhu

STRUCTURAL DRAWING		NOTES	CHECKED	APPROVED	DATE	DRAWING NO.
PROJECT TITLE	DRAWING TITLE	1. ALL DIMENSIONS ARE IN MILLIMETER & ELEVATION IN METER UNLESS SPECIFIED OTHERWISE. 2. ALL DIMENSIONS MEASURE UNFINISHED SURFACES UNLESS SPECIFIED OTHERWISE. 3. DIMENSIONS ARE TO BE READ AND NOT SCALED OFF. 4. ANY DISCREPANCIES IN THE DRAWING ARE TO BE BROUGHT TO THE IMMEDIATE NOTICE OF THE SUPERVISION TEAM.				STR_06
Construction of Doksum Primary School	RRM_WALL_DETAILS				MARCH, 2026	SCALE NTS

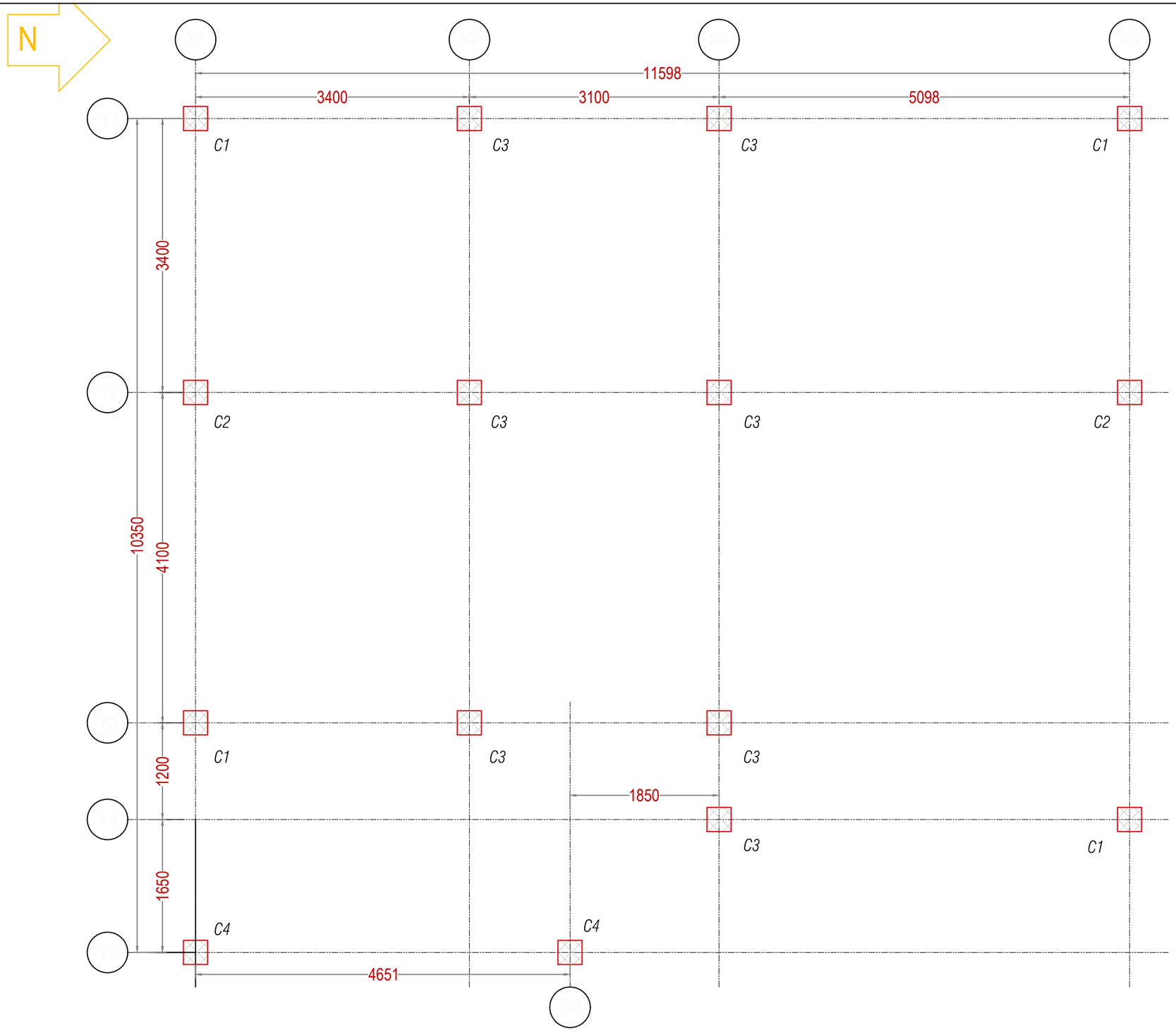

Column Layout Plan

Khorlochhu	STRUCTURAL DRAWING	NOTES	CHECKED	APPROVED	DATE	DRAWING NO.
	PROJECT TITLE: Construction of Doksum Primary School	DRAWING TITLE: COLUMN_LAYOUT_PLAN				STR_07
		1. ALL DIMENSIONS ARE IN MILLIMETER & ELEVATION IN METER UNLESS SPECIFIED OTHERWISE. 2. ALL DIMENSIONS MEASURE UNFINISHED SURFACES UNLESS SPECIFIED OTHERWISE. 3. DIMENSIONS ARE TO BE READ AND NOT SCALED OFF. 4. ANY DISCREPANCIES IN THE DRAWING ARE TO BE BROUGHT TO THE IMMEDIATE NOTICE OF THE SUPERVISION TEAM.			MARCH, 2026	SCALE: NTS

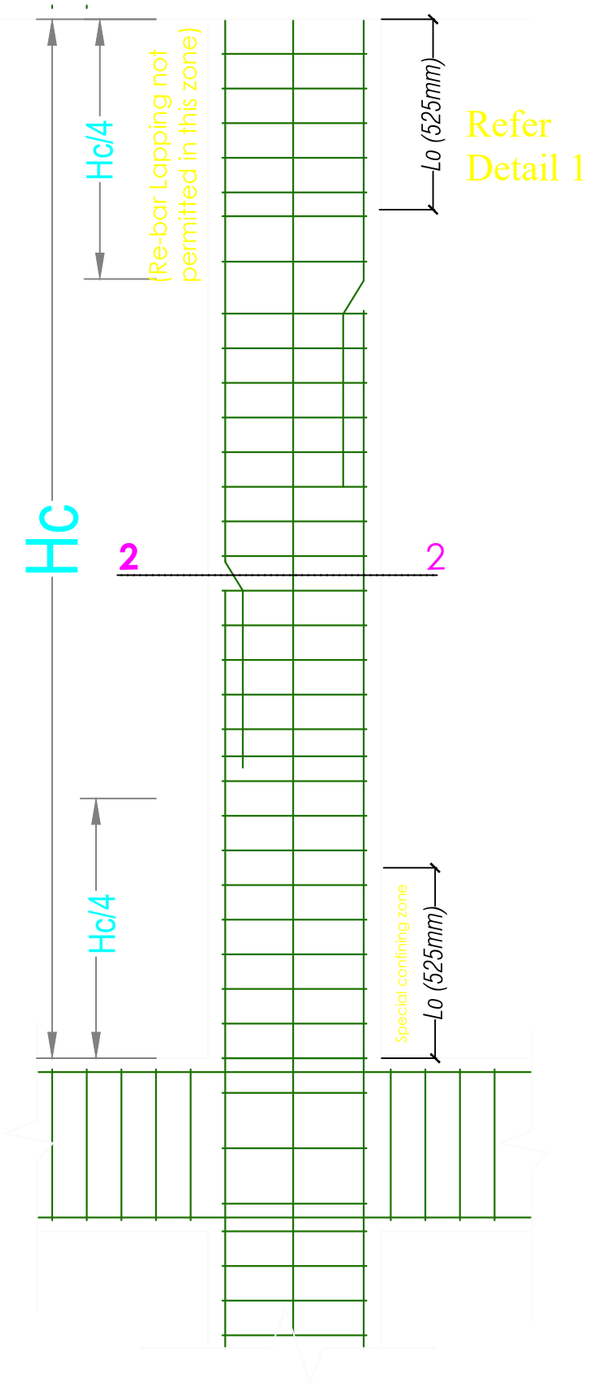

TYPICAL SECTION (showing Typical arrangment of Rebar and Ties in columns)

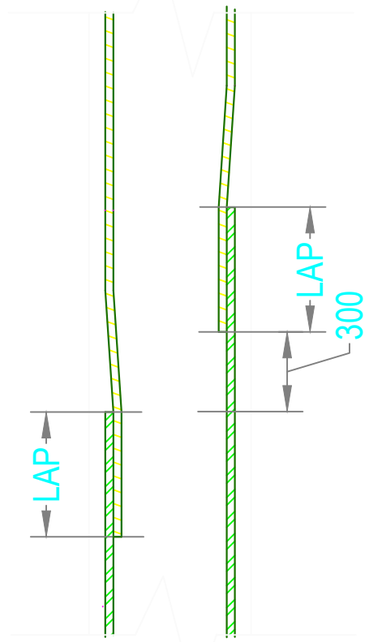

DETAIL 1
(showing staggering of laps in columns)

Bar Dia.	Splice Length
16Ø	912
20Ø	1140
25Ø	1425

(NORMAL CONFINING)

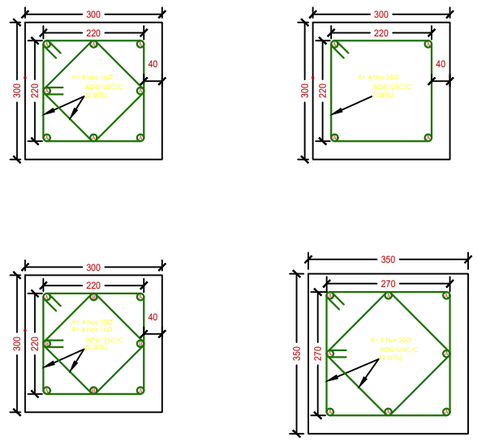

15 no. of reinforcement throughout the clear span of 2.1 m excluding the special confining reinforcement of column

(SPECIAL CONFINING)

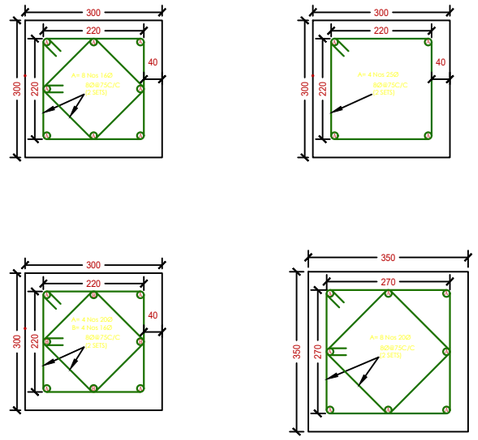

7 no. of reinforcement each for 525 mm on both sides of clear span of column

Khorlochhu

STRUCTURAL DRAWING

PROJECT TITLE	DRAWING TITLE
Construction of Doksum Primary School	COLUMN_DETAILS

NOTES

1. ALL DIMENSIONS ARE IN MILLIMETER & ELEVATION IN METER UNLESS SPECIFIED OTHERWISE.
2. ALL DIMENSIONS MEASURE UNFINISHED SURFACES UNLESS SPECIFIED OTHERWISE.
3. DIMENSIONS ARE TO BE READ AND NOT SCALED OFF.
4. ANY DISCREPANCIES IN THE DRAWING ARE TO BE BROUGHT TO THE IMMEDIATE NOTICE OF THE SUPERVISION TEAM.

CHECKED	APPROVED	DATE	DRAWING NO.
			STR_08
		MARCH, 2026	SCALE
			NTS

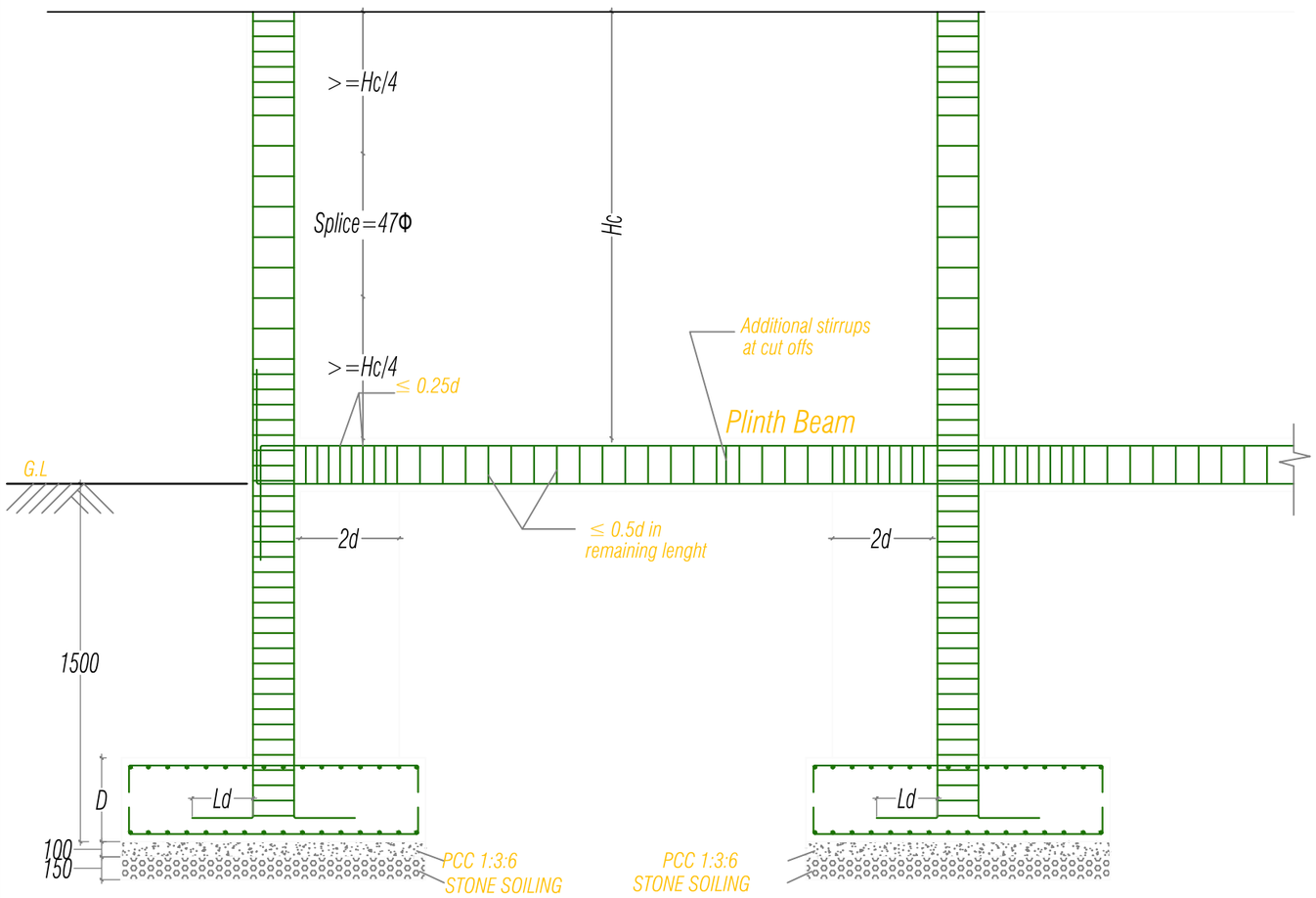

BEAM-COLUMN JUNCTION DETAILING

NOTE:

Clear Cover Details:

1. The clear cover to all footings should be 50 mm
2. The clear cover to all columns should be 40 mm
3. The clear cover to all beams should be 30 mm
4. The clear cover to all slabs should be 20 mm
5. The clear cover to RCC Wall should be 20 mm

Reinforcement Details

1. Not more than 50% of bars shall be spliced at one section both in beams and columns.
2. Column bars shall be spliced at a distance of Hc/4 from the face of support
3. No lap splice in columns are provided in first storey
4. Top bars in the beam shall splice at midspan while bottom bars shall be spliced at a distance of 2d from the face of the column but not at mid span
5. Full length of splice stirrups in ties in column shall be 8Ø @ 100mm c/c
6. The column encasing the stair case shall be provide with special confining reinforcement 8Ø @ 75mc/c throughout the height of column

Khorlochhu

STRUCTURAL DRAWING		NOTES	CHECKED	APPROVED	DATE	DRAWING NO.
PROJECT TITLE	DRAWING TITLE	1. ALL DIMENSIONS ARE IN MILLIMETER & ELEVATION IN METER UNLESS SPECIFIED OTHERWISE. 2. ALL DIMENSIONS MEASURE UNFINISHED SURFACES UNLESS SPECIFIED OTHERWISE. 3. DIMENSIONS ARE TO BE READ AND NOT SCALED OFF. 4. ANY DISCREPANCIES IN THE DRAWING ARE TO BE BROUGHT TO THE IMMEDIATE NOTICE OF THE SUPERVISION TEAM.				STR_09
Construction of Doksum Primary School	COLUMN_BEAM_JUNCTION_DETAILS				MARCH, 2026	SCALE NTS

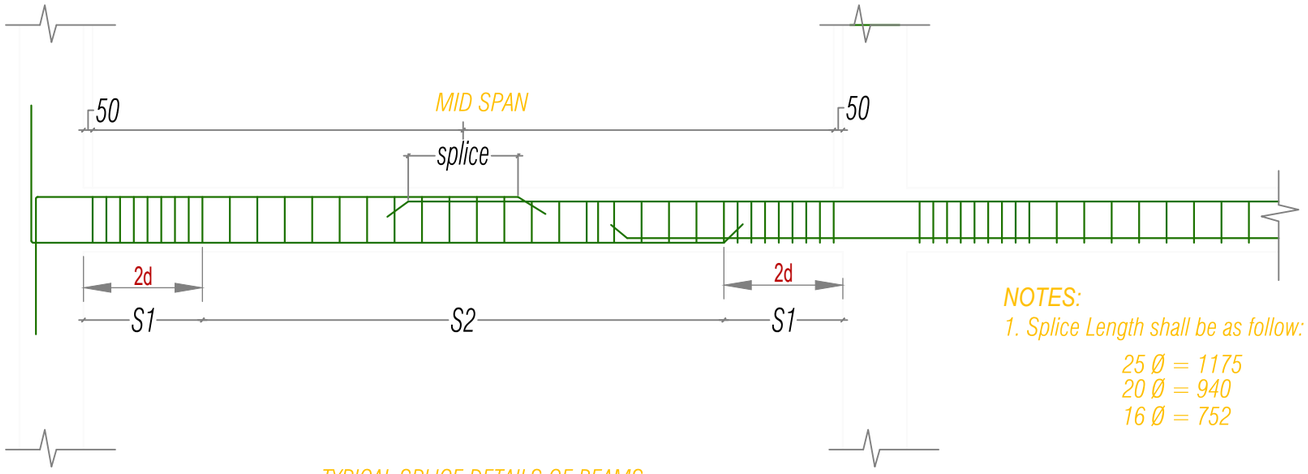

TYPICAL SPLICE DETAILS OF BEAMS

NOTES:
1. Splice Length shall be as follow:

25 Ø = 1175
20 Ø = 940
16 Ø = 752

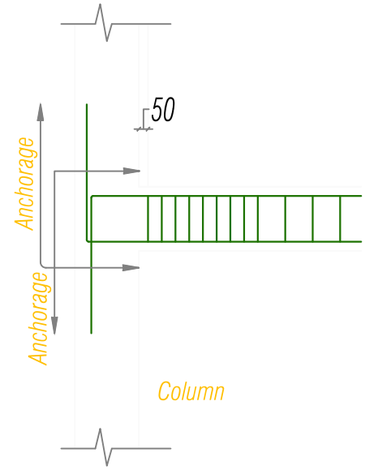

Bar Anchorage Length
(Minimum Length = 67Ø)

16 Ø = 912
20 Ø = 1140
25 Ø = 1425

ANCHORAGE
DETAILS AT - A

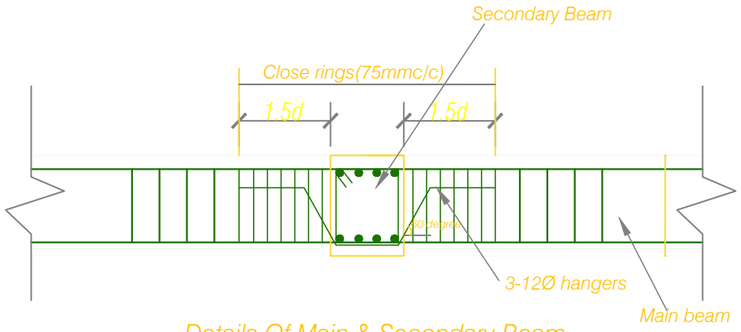

Details Of Main & Secondary Beam

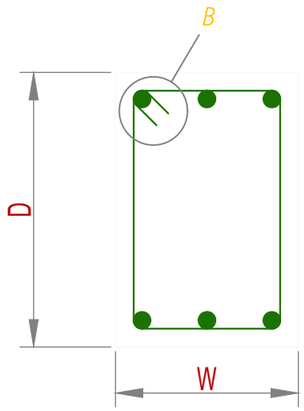

BEAM STIRRUPS DETAILS

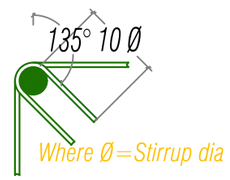

DETAILS AT - B

Stirrups in the Beams

Location	: Stirrups provided
2d	: 8Ø@100c/c
S1	: 8Ø@150c/c
Splice	: 8Ø@100c/c

Typical Floor Beam Details

Khorlochhu	STRUCTURAL DRAWING	NOTES	CHECKED	APPROVED	DATE	DRAWING NO.
	PROJECT TITLE: Construction of Doksum Primary School	1. ALL DIMENSIONS ARE IN MILLIMETER & ELEVATION IN METER UNLESS SPECIFIED OTHERWISE. 2. ALL DIMENSIONS MEASURE UNFINISHED SURFACES UNLESS SPECIFIED OTHERWISE. 3. DIMENSIONS ARE TO BE READ AND NOT SCALED OFF. 4. ANY DISCREPANCIES IN THE DRAWING ARE TO BE BROUGHT TO THE IMMEDIATE NOTICE OF THE SUPERVISION TEAM.				STR_10
	DRAWING TITLE: TYPICAL_FLOOR_BEAM_DETAILS				MARCH, 2026	SCALE: NTS

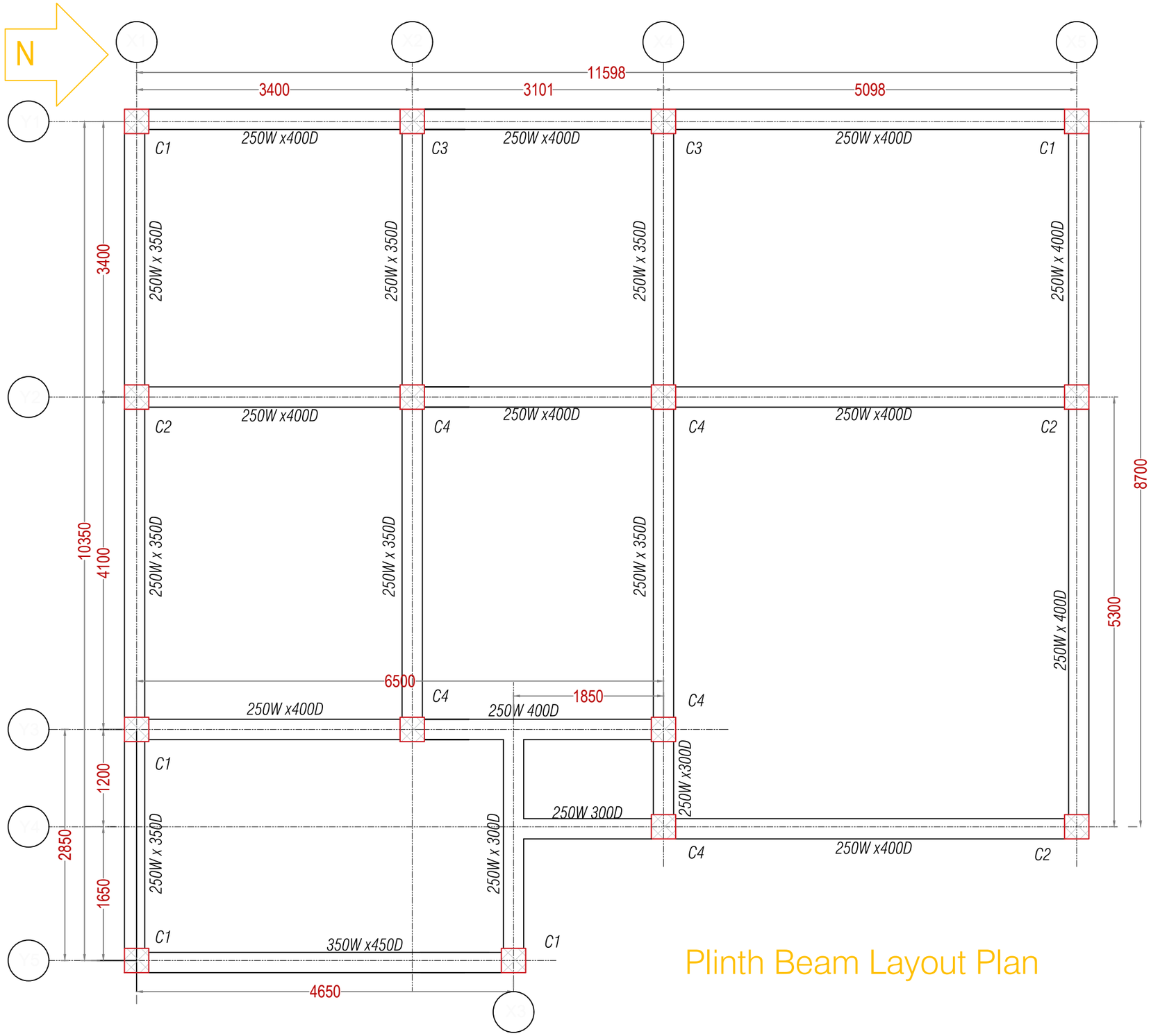

Plinth Beam Layout Plan

Khorlochhu

STRUCTURAL DRAWING

PROJECT TITLE	DRAWING TITLE
Construction of Doksum Primary School	PLINTH_BEAM_LAYOUT_PLAN

NOTES

1. ALL DIMENSIONS ARE IN MILLIMETER & ELEVATION IN METER UNLESS SPECIFIED OTHERWISE.
2. ALL DIMENSIONS MEASURE UNFINISHED SURFACES UNLESS SPECIFIED OTHERWISE.
3. DIMENSIONS ARE TO BE READ AND NOT SCALED OFF.
4. ANY DISCREPANCIES IN THE DRAWING ARE TO BE BROUGHT TO THE IMMEDIATE NOTICE OF THE SUPERVISION TEAM.

CHECKED	APPROVED	DATE	DRAWING NO.
			STR_11
		MARCH, 2026	SCALE
			NTS

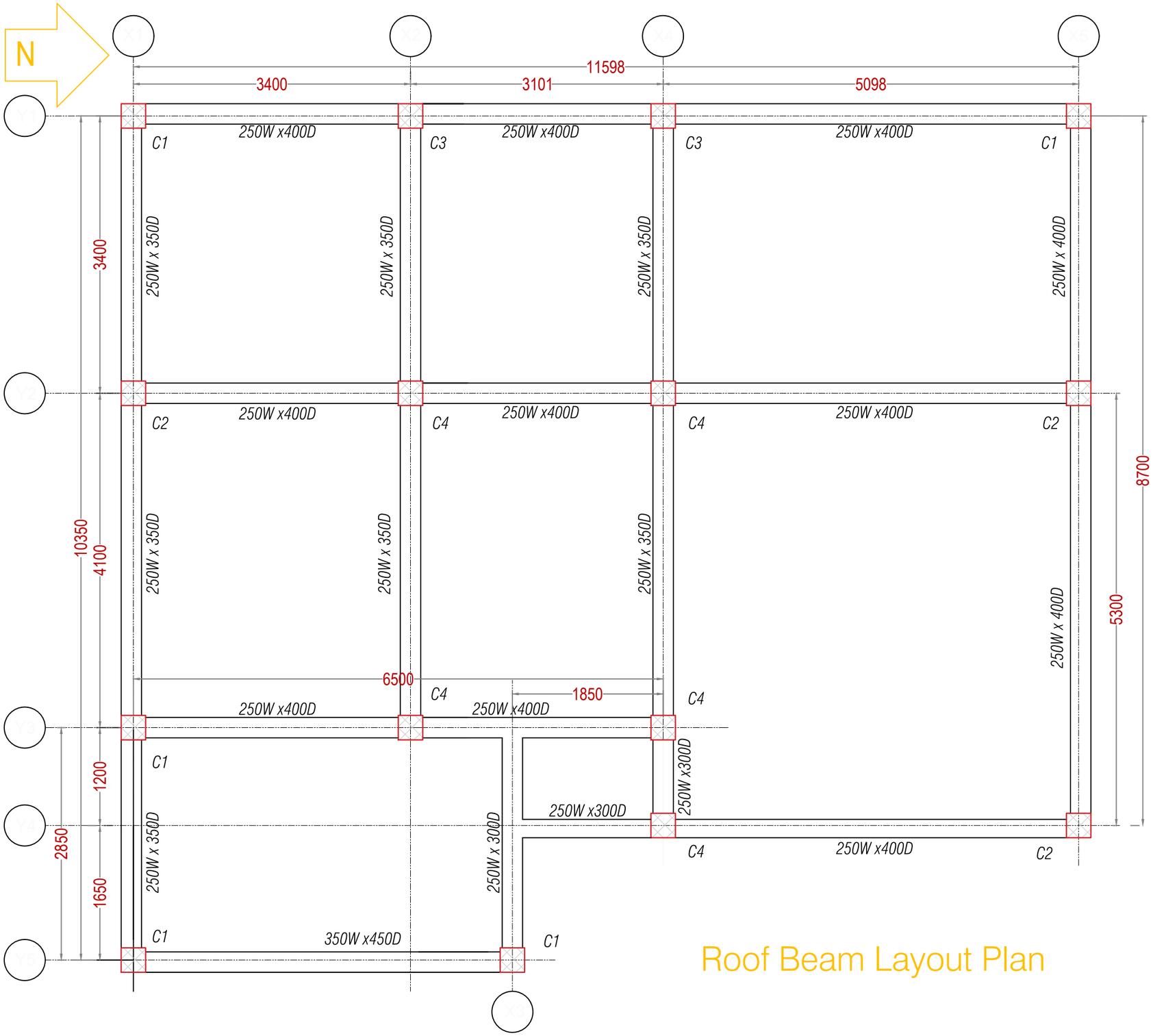

Roof Beam Layout Plan

Khorlochhu

STRUCTURAL DRAWING

PROJECT TITLE	DRAWING TITLE
Construction of Doksum Primary School	ROOF_BEAM_LAYOUT_PLAN

NOTES

1. ALL DIMENSIONS ARE IN MILLIMETER & ELEVATION IN METER UNLESS SPECIFIED OTHERWISE.
2. ALL DIMENSIONS MEASURE UNFINISHED SURFACES UNLESS SPECIFIED OTHERWISE.
3. DIMENSIONS ARE TO BE READ AND NOT SCALED OFF.
4. ANY DISCREPANCIES IN THE DRAWING ARE TO BE BROUGHT TO THE IMMEDIATE NOTICE OF THE SUPERVISION TEAM.

CHECKED	APPROVED	DATE	DRAWING NO.
			STR_12
		MARCH, 2026	SCALE
			NTS

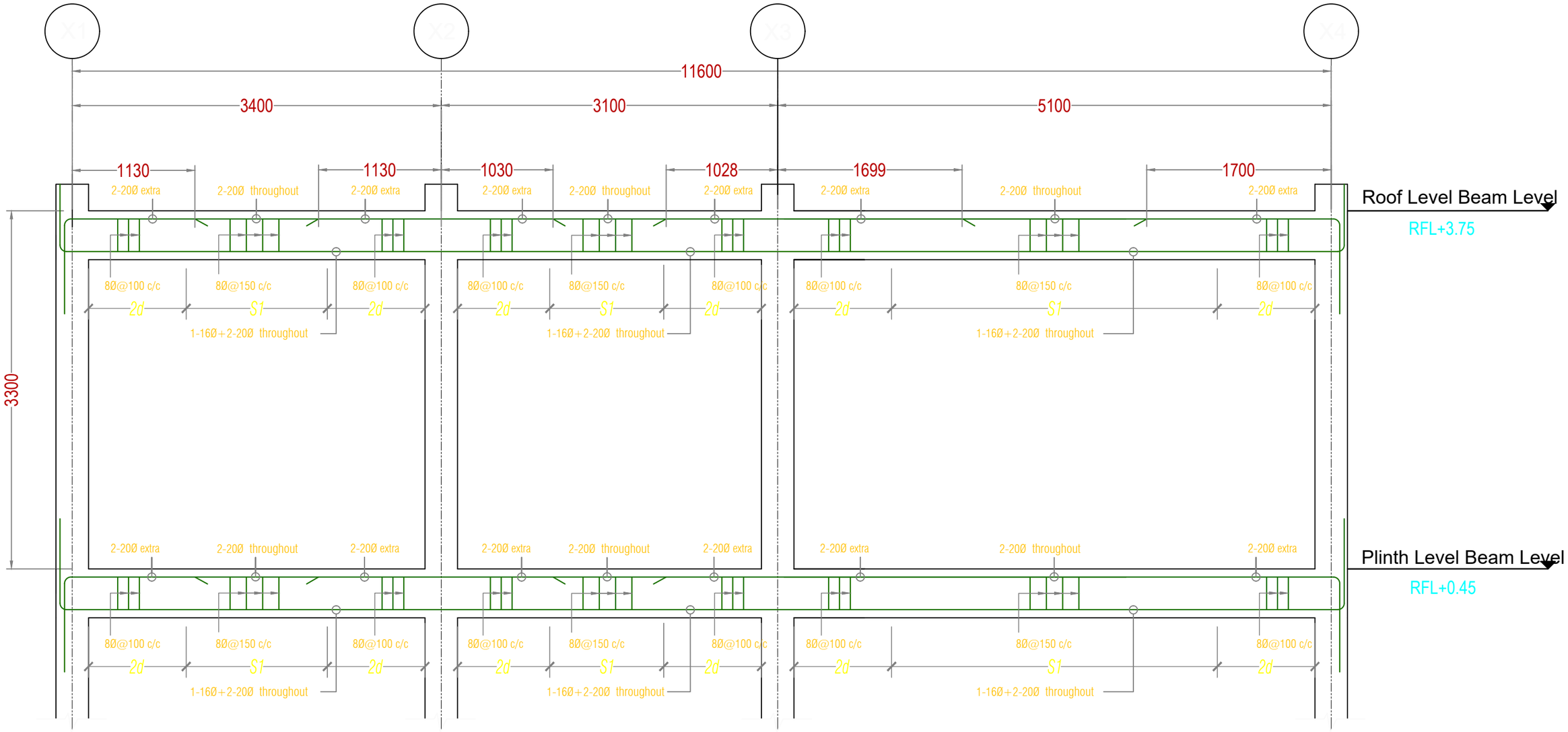

L-Section Along Frame Y1

NOTE:
- S1=2D =8Ø @ 100 C/C (D=OVERALL DEPTH OF BEAM)
- S2=8Ø @ 150 C/C
- THE FIRST STIRRUPS IS PLACED MAXIMUM 50 MM FROM THE FACE OF COLUMN

Khorlochhu

STRUCTURAL DRAWING		NOTES	CHECKED	APPROVED	DATE	DRAWING NO.
PROJECT TITLE	DRAWING TITLE	1. ALL DIMENSIONS ARE IN MILLIMETER & ELEVATION IN METER UNLESS SPECIFIED OTHERWISE. 2. ALL DIMENSIONS MEASURE UNFINISHED SURFACES UNLESS SPECIFIED OTHERWISE. 3. DIMENSIONS ARE TO BE READ AND NOT SCALED OFF. 4. ANY DISCREPANCIES IN THE DRAWING ARE TO BE BROUGHT TO THE IMMEDIATE NOTICE OF THE SUPERVISION TEAM.				STR_13
Construction of Doksum Primary School	BEAM_SECTION_ALONG_FRAME_Y1				MARCH, 2026	SCALE NTS

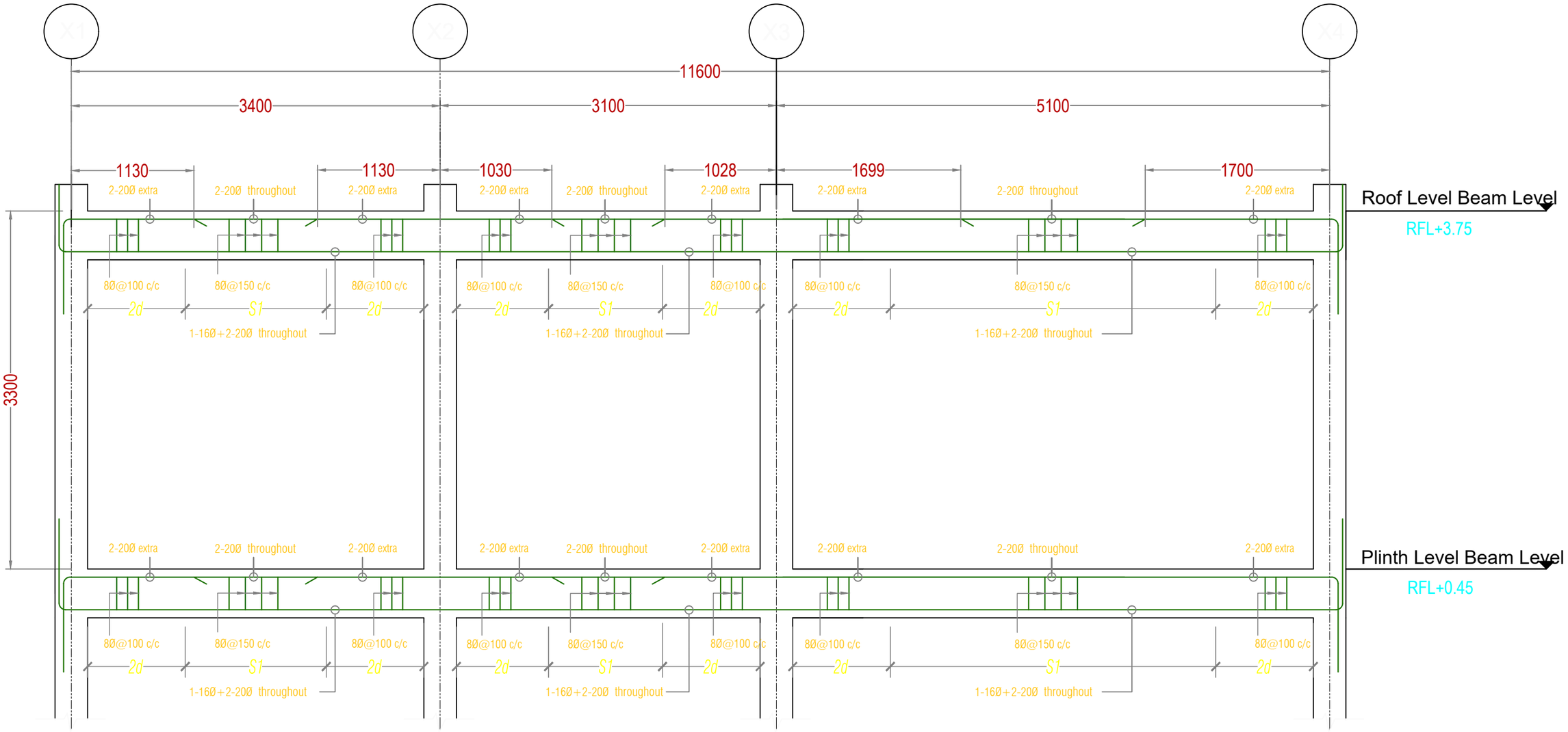

L-Section Along Frame Y2

NOTE:
- S1=2D =8Ø @ 100 C/C (D=OVERALL DEPTH OF BEAM)
- S2=8Ø @ 150 C/C
- THE FIRST STIRRUPS IS PLACED MAXIMUM 50 MM FROM THE FACE OF COLUMN

Khorlochhu

STRUCTURAL DRAWING		NOTES	CHECKED	APPROVED	DATE	DRAWING NO.
PROJECT TITLE	DRAWING TITLE	1. ALL DIMENSIONS ARE IN MILLIMETER & ELEVATION IN METER UNLESS SPECIFIED OTHERWISE. 2. ALL DIMENSIONS MEASURE UNFINISHED SURFACES UNLESS SPECIFIED OTHERWISE. 3. DIMENSIONS ARE TO BE READ AND NOT SCALED OFF. 4. ANY DISCREPANCIES IN THE DRAWING ARE TO BE BROUGHT TO THE IMMEDIATE NOTICE OF THE SUPERVISION TEAM.				STR_14
Construction of Doksum Primary School	BEAM_SECTION_ALONG_Y2				MARCH, 2026	SCALE NTS

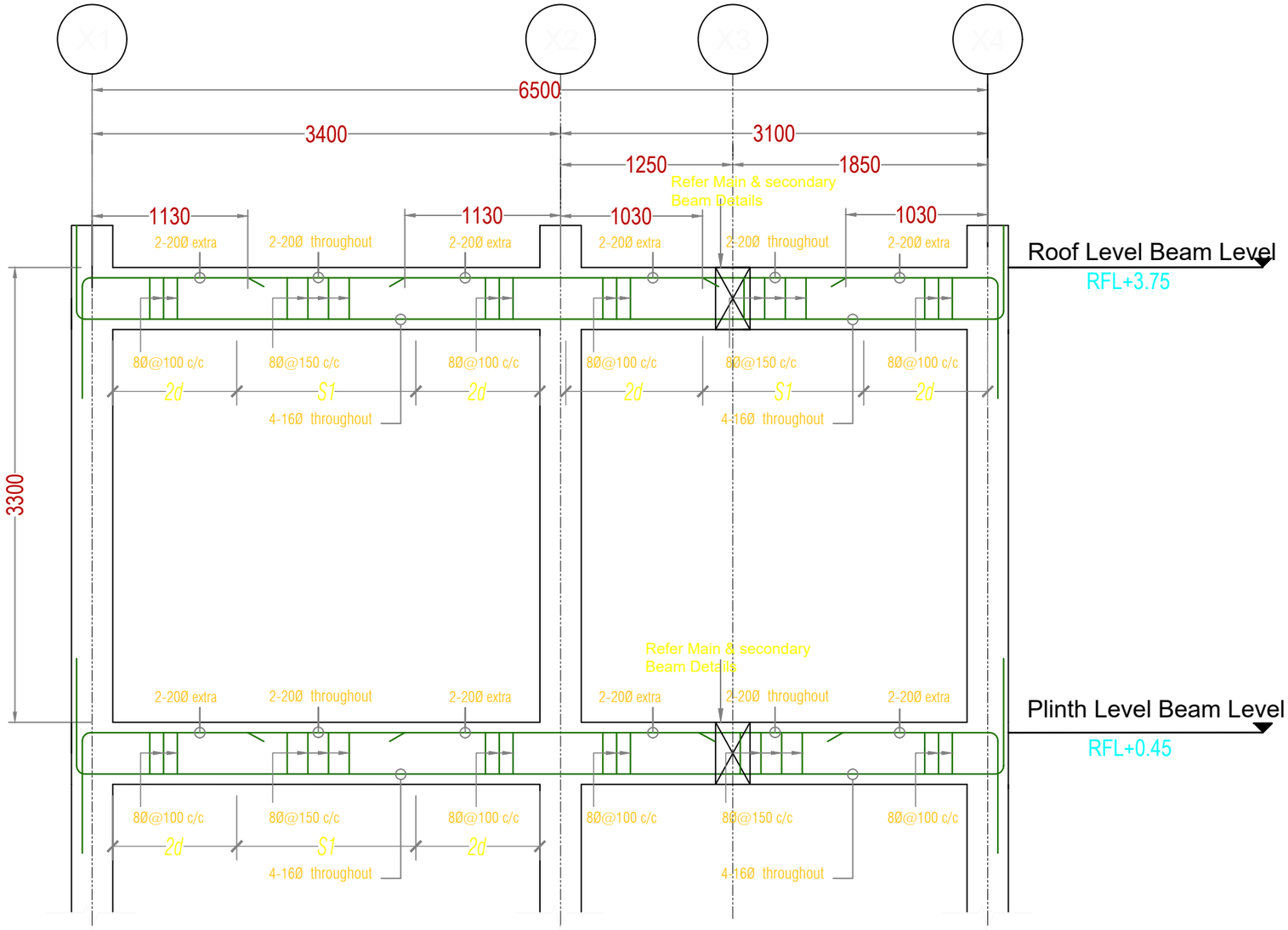

L-Section Along Frame Y3

NOTE:
- S1=2D =8Ø @ 100 C/C (D=OVERALL DEPTH OF BEAM)
- S2=8Ø @ 150 C/C
- THE FIRST STIRRUPS IS PLACED MAXIMUM 50 MM FROM THE FACE OF COLUMN

Khorlochhu	STRUCTURAL DRAWING	NOTES	CHECKED	APPROVED	DATE	DRAWING NO.
	PROJECT TITLE	DRAWING TITLE	1. ALL DIMENSIONS ARE IN MILLIMETER & ELEVATION IN METER UNLESS SPECIFIED OTHERWISE. 2. ALL DIMENSIONS MEASURE UNFINISHED SURFACES UNLESS SPECIFIED OTHERWISE. 3. DIMENSIONS ARE TO BE READ AND NOT SCALED OFF. 4. ANY DISCREPANCIES IN THE DRAWING ARE TO BE BROUGHT TO THE IMMEDIATE NOTICE OF THE SUPERVISION TEAM.				STR_15
	Construction of Doksum Primary School	BEAM_SECTION_ALONG_FRAME_Y3			MARCH, 2026	SCALE NTS

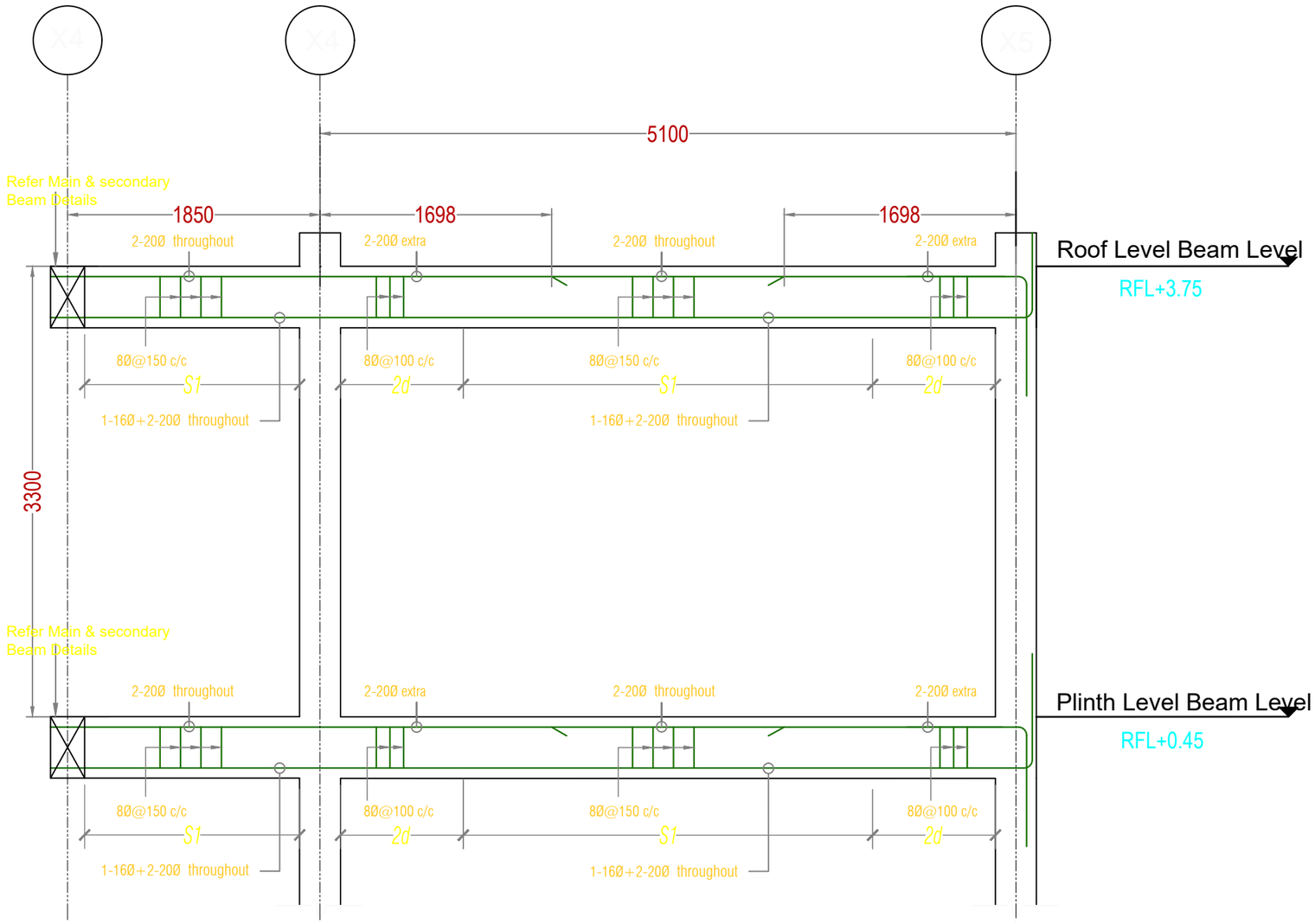

L-Section Along Frame Y4

NOTE:
- S1=2D =8Ø @ 100 C/C (D=OVERALL DEPTH OF BEAM)
- S2=8Ø @ 150 C/C
- THE FIRST STIRRUPS IS PLACED MAXIMUM 50 MM FROM THE FACE OF COLUMN

Khorlochhu

STRUCTURAL DRAWING

PROJECT TITLE	DRAWING TITLE
Construction of Doksum Primary School	BEAM_SECTION_ALONG_FRAME_Y4

NOTES

1. ALL DIMENSIONS ARE IN MILLIMETER & ELEVATION IN METER UNLESS SPECIFIED OTHERWISE.
2. ALL DIMENSIONS MEASURE UNFINISHED SURFACES UNLESS SPECIFIED OTHERWISE.
3. DIMENSIONS ARE TO BE READ AND NOT SCALED OFF.
4. ANY DISCREPANCIES IN THE DRAWING ARE TO BE BROUGHT TO THE IMMEDIATE NOTICE OF THE SUPERVISION TEAM.

CHECKED	APPROVED	DATE	DRAWING NO.
			STR_16
		MARCH, 2026	SCALE
			NTS

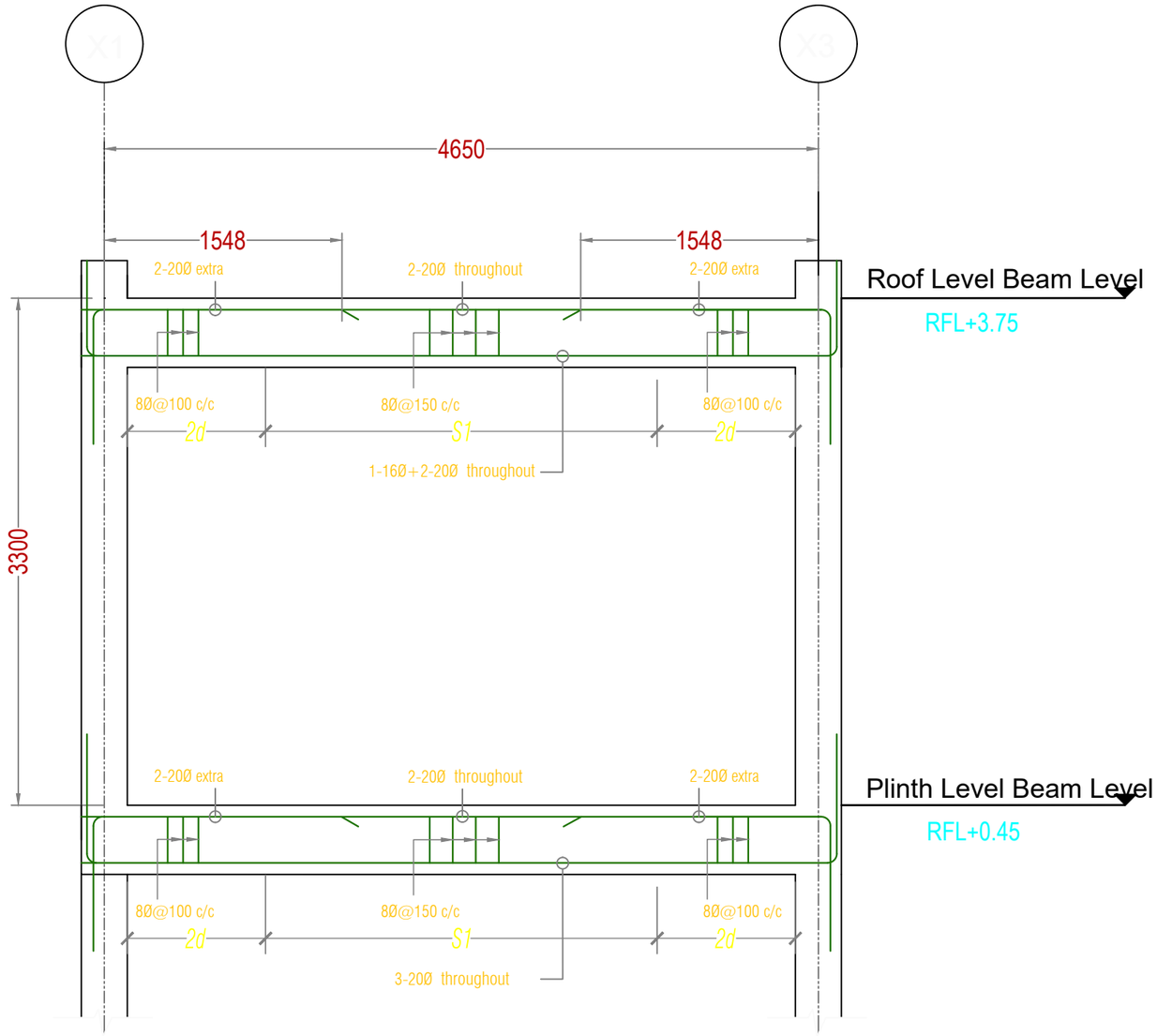

L-Section Along Frame Y5

NOTE:
- S1=2D =8Ø @ 100 C/C (D=OVERALL DEPTH OF BEAM)
- S2=8Ø @ 150 C/C
- THE FIRST STIRRUPS IS PLACED MAXIMUM 50 MM FROM THE FACE OF COLUMN

Khorlochhu

STRUCTURAL DRAWING		NOTES	CHECKED	APPROVED	DATE	DRAWING NO.
PROJECT TITLE	DRAWING TITLE	1. ALL DIMENSIONS ARE IN MILLIMETER & ELEVATION IN METER UNLESS SPECIFIED OTHERWISE. 2. ALL DIMENSIONS MEASURE UNFINISHED SURFACES UNLESS SPECIFIED OTHERWISE. 3. DIMENSIONS ARE TO BE READ AND NOT SCALED OFF. 4. ANY DISCREPANCIES IN THE DRAWING ARE TO BE BROUGHT TO THE IMMEDIATE NOTICE OF THE SUPERVISION TEAM.				STR_17
Construction of Doksum Primary School	BEAM_SECTION_ALONG_FRAME_Y5				MARCH, 2026	SCALE NTS

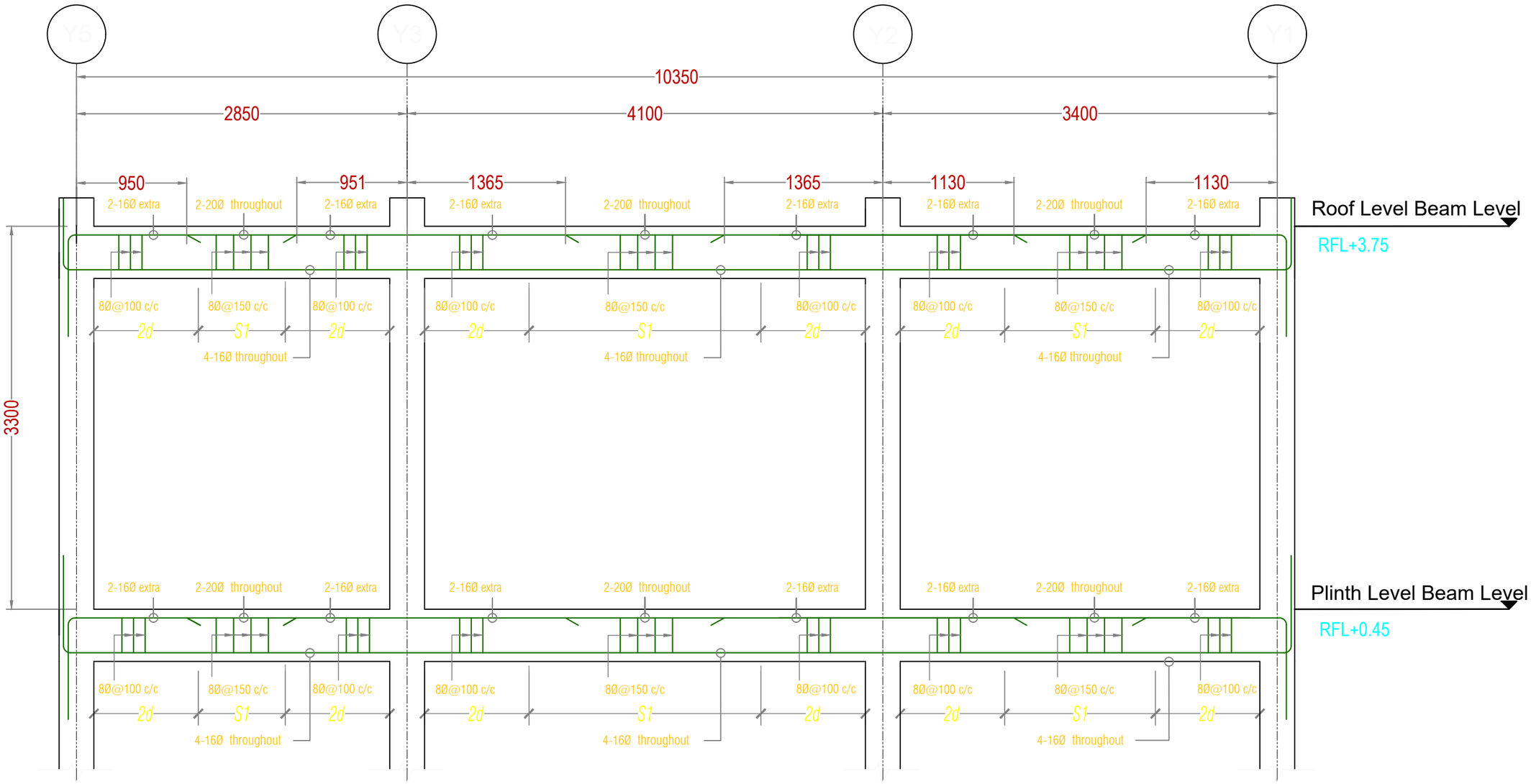

L-Section Along Frame X1

NOTE:
- S1=2D =8Ø @ 100 C/C (D=OVERALL DEPTH OF BEAM)
- S2=8Ø @ 150 C/C
- THE FIRST STIRRUPS IS PLACED MAXIMUM 50 MM FROM THE FACE OF COLUMN

Khorlochhu

STRUCTURAL DRAWING		NOTES	CHECKED	APPROVED	DATE	DRAWING NO.
PROJECT TITLE	DRAWING TITLE	1. ALL DIMENSIONS ARE IN MILLIMETER & ELEVATION IN METER UNLESS SPECIFIED OTHERWISE. 2. ALL DIMENSIONS MEASURE UNFINISHED SURFACES UNLESS SPECIFIED OTHERWISE. 3. DIMENSIONS ARE TO BE READ AND NOT SCALED OFF. 4. ANY DISCREPANCIES IN THE DRAWING ARE TO BE BROUGHT TO THE IMMEDIATE NOTICE OF THE SUPERVISION TEAM.				STR_18
Construction of Doksum Primary School	BEAM_SECTION_ALONG_FRAME_X1				MARCH, 2026	SCALE NTS

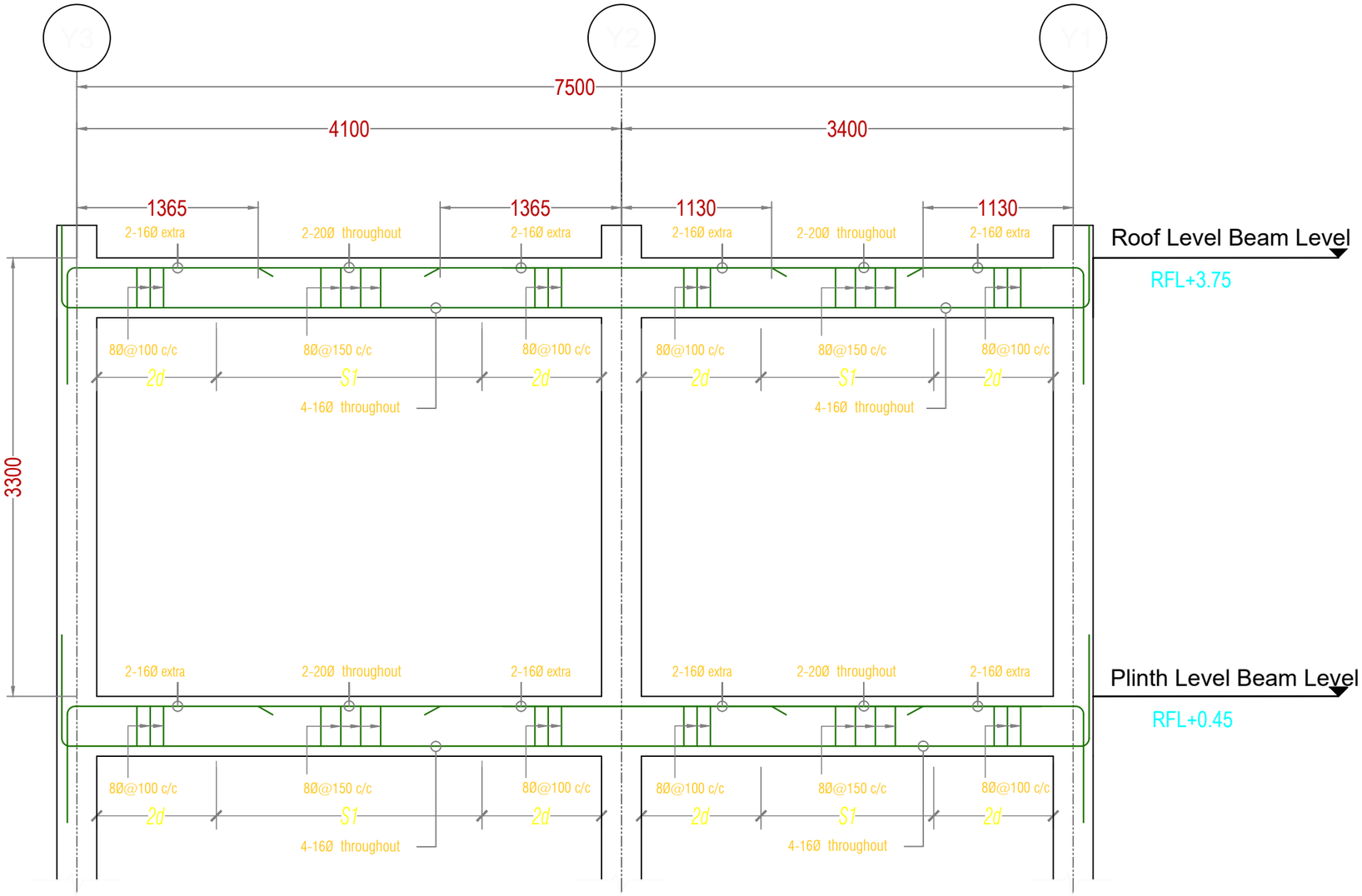

L-Section Along Frame X2

NOTE:
- S1=2D =8Ø @ 100 C/C (D=OVERALL DEPTH OF BEAM)
- S2=8Ø @ 150 C/C
- THE FIRST STIRRUPS IS PLACED MAXIMUM 50 MM FROM THE FACE OF COLUMN

Khorlochhu

STRUCTURAL DRAWING		NOTES	CHECKED	APPROVED	DATE	DRAWING NO.
PROJECT TITLE	DRAWING TITLE	1. ALL DIMENSIONS ARE IN MILLIMETER & ELEVATION IN METER UNLESS SPECIFIED OTHERWISE. 2. ALL DIMENSIONS MEASURE UNFINISHED SURFACES UNLESS SPECIFIED OTHERWISE. 3. DIMENSIONS ARE TO BE READ AND NOT SCALED OFF. 4. ANY DISCREPANCIES IN THE DRAWING ARE TO BE BROUGHT TO THE IMMEDIATE NOTICE OF THE SUPERVISION TEAM.				STR_19
Construction of Doksum Primary School	BEAM_SECTION_ALONG_FRAME_X2				MARCH, 2026	SCALE NTS

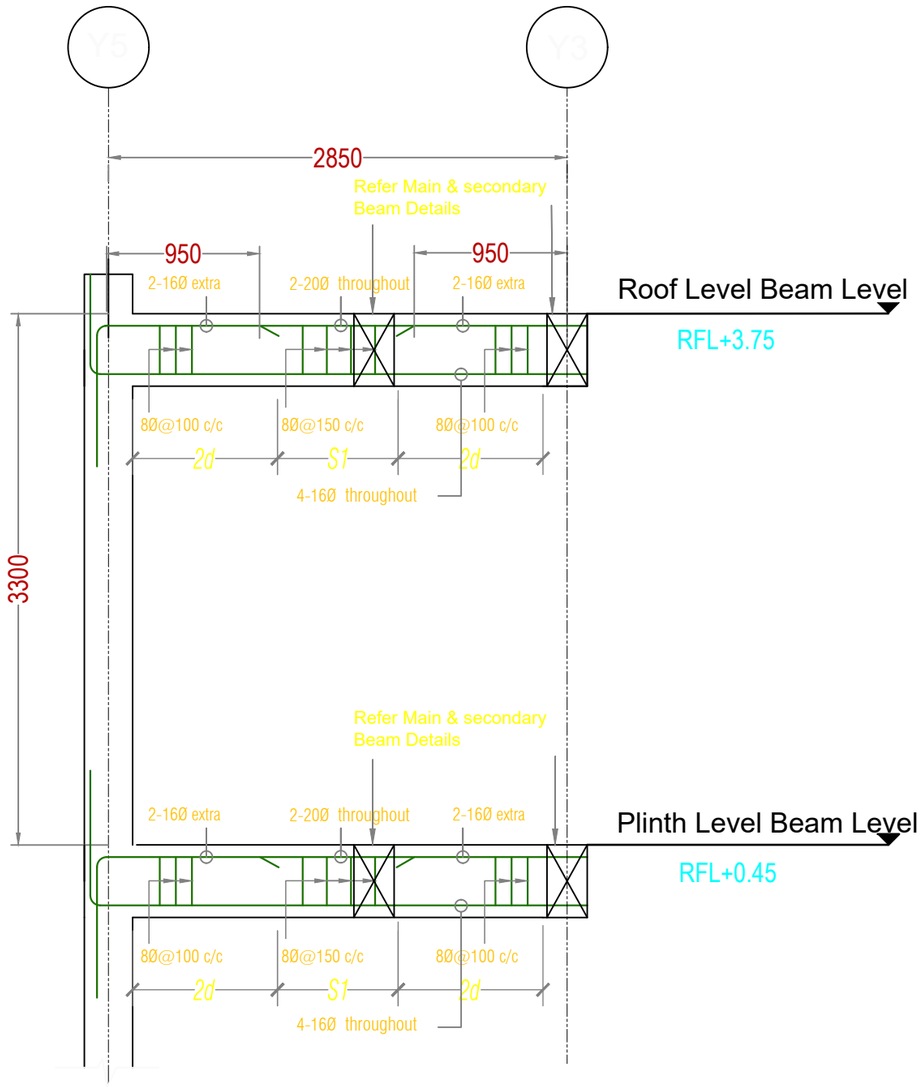

L-Section Along Frame X3

NOTE:
- S1=2D =8Ø @ 100 C/C (D=OVERALL DEPTH OF BEAM)
- S2=8Ø @ 150 C/C
- THE FIRST STIRRUPS IS PLACED MAXIMUM 50 MM FROM THE FACE OF COLUMN

Khorlochhu	STRUCTURAL DRAWING	NOTES	CHECKED	APPROVED	DATE	DRAWING NO.
	PROJECT TITLE: Construction of Doksum Primary School	1. ALL DIMENSIONS ARE IN MILLIMETER & ELEVATION IN METER UNLESS SPECIFIED OTHERWISE. 2. ALL DIMENSIONS MEASURE UNFINISHED SURFACES UNLESS SPECIFIED OTHERWISE. 3. DIMENSIONS ARE TO BE READ AND NOT SCALED OFF. 4. ANY DISCREPANCIES IN THE DRAWING ARE TO BE BROUGHT TO THE IMMEDIATE NOTICE OF THE SUPERVISION TEAM.				STR_20
	DRAWING TITLE: BEAM_SECTION_ALONG_FRAME_X3				MARCH, 2026	SCALE: NTS

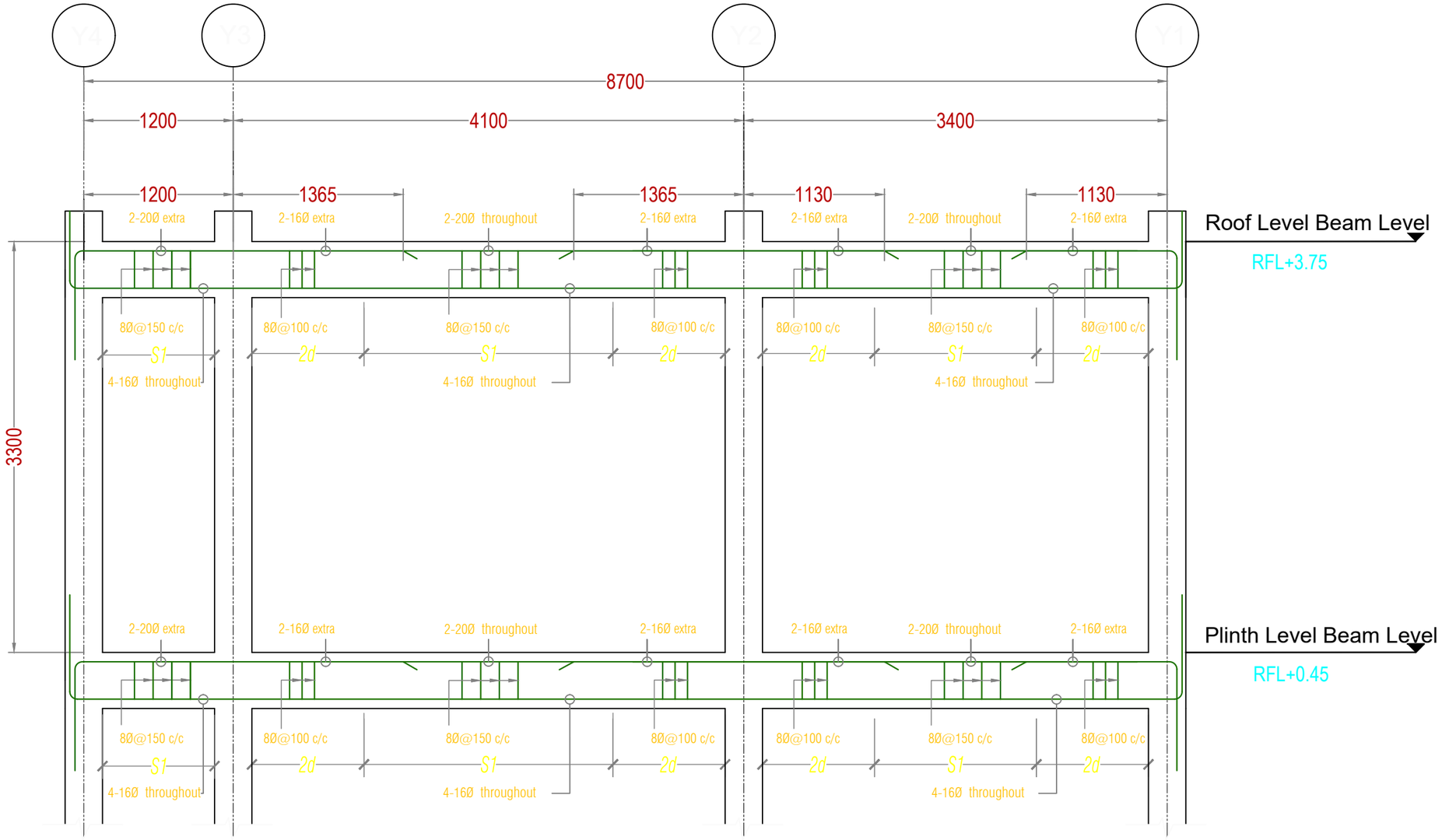

L-Section Along Frame X4

NOTE:
- S1=2D =8Ø @ 100 C/C (D=OVERALL DEPTH OF BEAM)
- S2=8Ø @ 150 C/C
- THE FIRST STIRRUPS IS PLACED MAXIMUM 50 MM FROM THE FACE OF COLUMN

Khorlochhu

STRUCTURAL DRAWING		NOTES	CHECKED	APPROVED	DATE	DRAWING NO.
PROJECT TITLE	DRAWING TITLE	1. ALL DIMENSIONS ARE IN MILLIMETER & ELEVATION IN METER UNLESS SPECIFIED OTHERWISE. 2. ALL DIMENSIONS MEASURE UNFINISHED SURFACES UNLESS SPECIFIED OTHERWISE. 3. DIMENSIONS ARE TO BE READ AND NOT SCALED OFF. 4. ANY DISCREPANCIES IN THE DRAWING ARE TO BE BROUGHT TO THE IMMEDIATE NOTICE OF THE SUPERVISION TEAM.				STR_21
Construction of Doksum Primary School	BEAM_SECTION_ALONG_FRAME_X4				MARCH, 2026	SCALE NTS

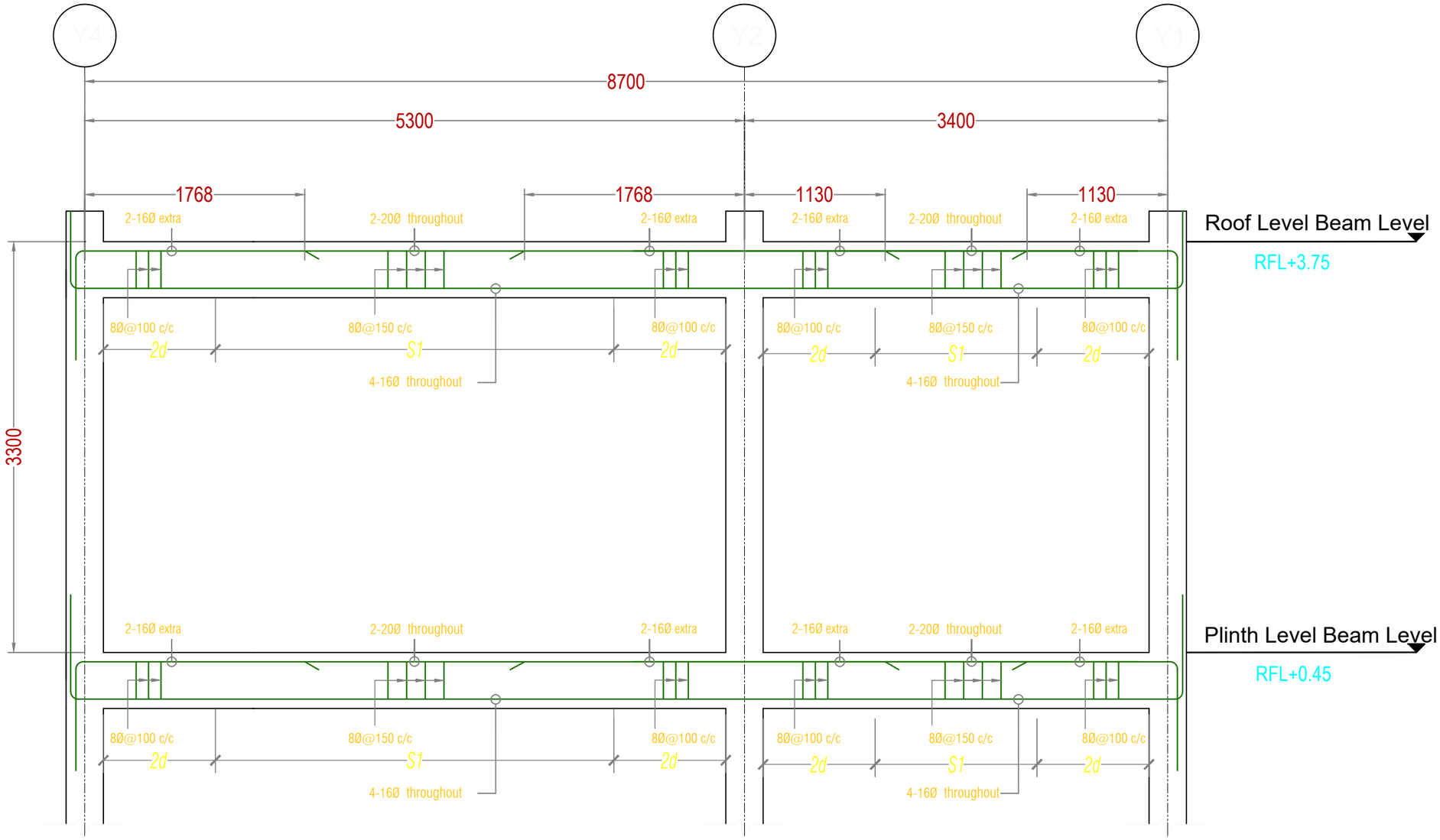

L-Section Along Frame X5

NOTE:
- S1=2D =8Ø @ 100 C/C (D=OVERALL DEPTH OF BEAM)
- S2=8Ø @ 150 C/C
- THE FIRST STIRRUPS IS PLACED MAXIMUM 50 MM FROM THE FACE OF COLUMN

Khorlochhu

STRUCTURAL DRAWING		NOTES	CHECKED	APPROVED	DATE	DRAWING NO.
PROJECT TITLE	DRAWING TITLE	1. ALL DIMENSIONS ARE IN MILLIMETER & ELEVATION IN METER UNLESS SPECIFIED OTHERWISE. 2. ALL DIMENSIONS MEASURE UNFINISHED SURFACES UNLESS SPECIFIED OTHERWISE. 3. DIMENSIONS ARE TO BE READ AND NOT SCALED OFF. 4. ANY DISCREPANCIES IN THE DRAWING ARE TO BE BROUGHT TO THE IMMEDIATE NOTICE OF THE SUPERVISION TEAM.				STR_22
Construction of Doksum Primary School	BEAM_SECTION_ALONG_FRAME_X5				MARCH, 2026	SCALE NTS

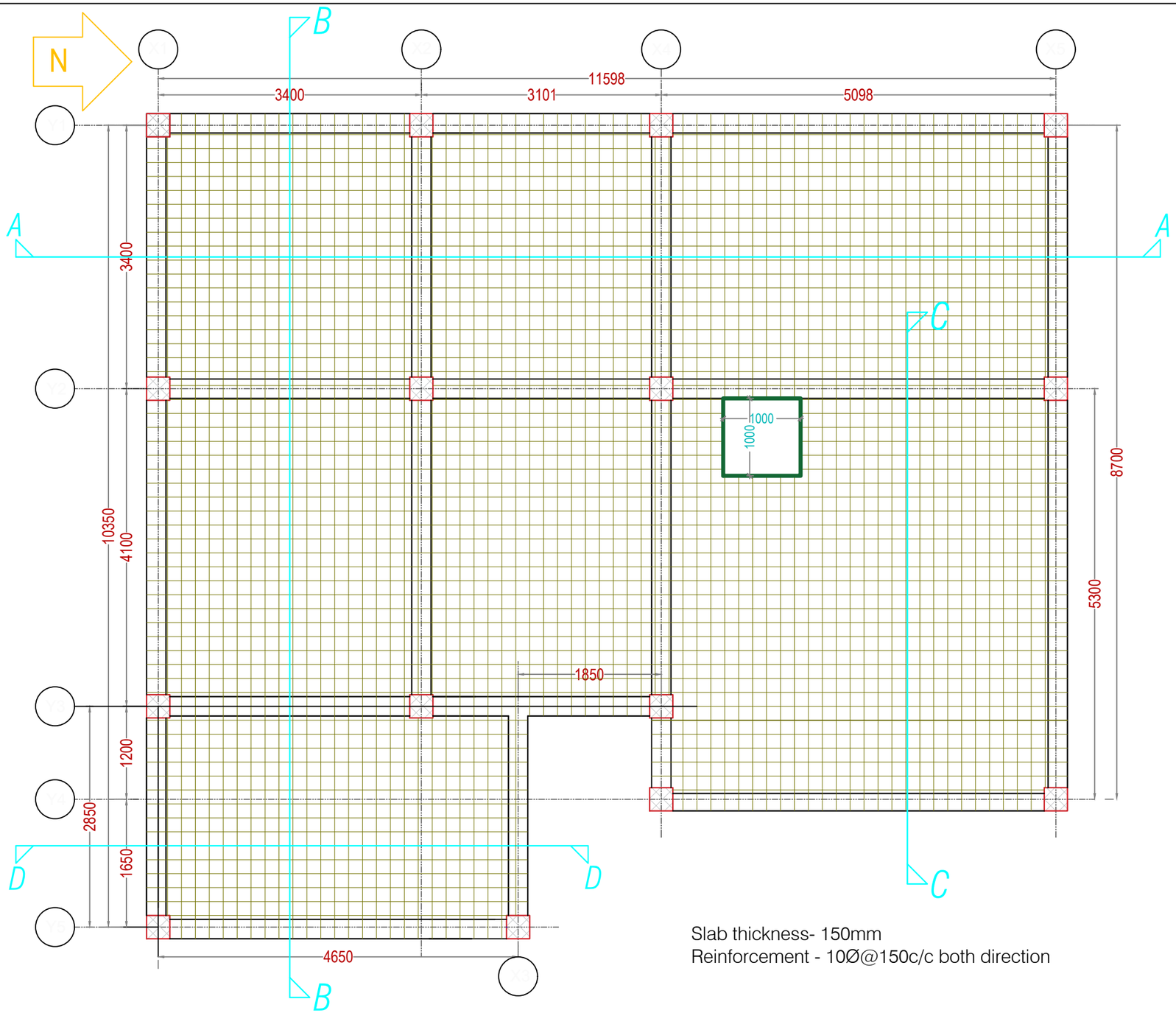

Slab thickness- 150mm
Reinforcement - 10Ø@150c/c both direction

Roof Level Reinforcement Layout Plan - Bottom Reinforcement

Note: Projection of Slab to be read along with Architectural Drawings

Khorlochhu

STRUCTURAL DRAWING

PROJECT TITLE	DRAWING TITLE
Construction of Doksum Primary School	ROOF_SLAB_LAYOUT

NOTES

1. ALL DIMENSIONS ARE IN MILLIMETER & ELEVATION IN METER UNLESS SPECIFIED OTHERWISE.
2. ALL DIMENSIONS MEASURE UNFINISHED SURFACES UNLESS SPECIFIED OTHERWISE.
3. DIMENSIONS ARE TO BE READ AND NOT SCALED OFF.
4. ANY DISCREPANCIES IN THE DRAWING ARE TO BE BROUGHT TO THE IMMEDIATE NOTICE OF THE SUPERVISION TEAM.

CHECKED	APPROVED	DATE	DRAWING NO.
			STR_23
		MARCH, 2026	SCALE
			NTS

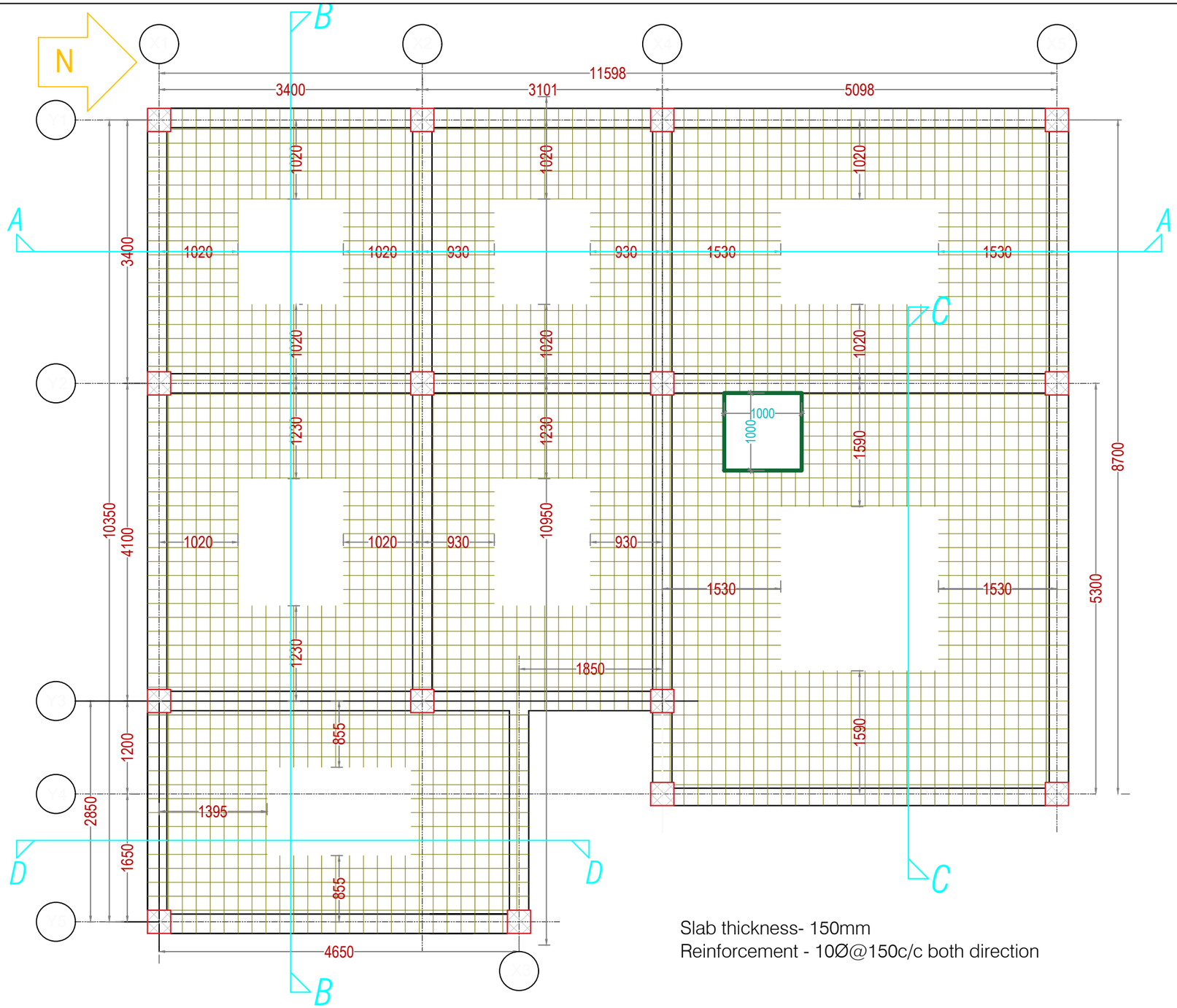

Slab thickness- 150mm
Reinforcement - 10Ø@150c/c both direction

Roof Level Reinforcement Layout Plan - Top Reinforcement

Note: Projection of Slab to be read along with Architectural Drawings

Khorlochhu

STRUCTURAL DRAWING		NOTES	CHECKED	APPROVED	DATE	DRAWING NO.
PROJECT TITLE	DRAWING TITLE	1. ALL DIMENSIONS ARE IN MILLIMETER & ELEVATION IN METER UNLESS SPECIFIED OTHERWISE. 2. ALL DIMENSIONS MEASURE UNFINISHED SURFACES UNLESS SPECIFIED OTHERWISE. 3. DIMENSIONS ARE TO BE READ AND NOT SCALED OFF. 4. ANY DISCREPANCIES IN THE DRAWING ARE TO BE BROUGHT TO THE IMMEDIATE NOTICE OF THE SUPERVISION TEAM.				STR_24
Construction of Doksum Primary School	ROOF_SLAB_LAYOUT				MARCH, 2026	SCALE NTS

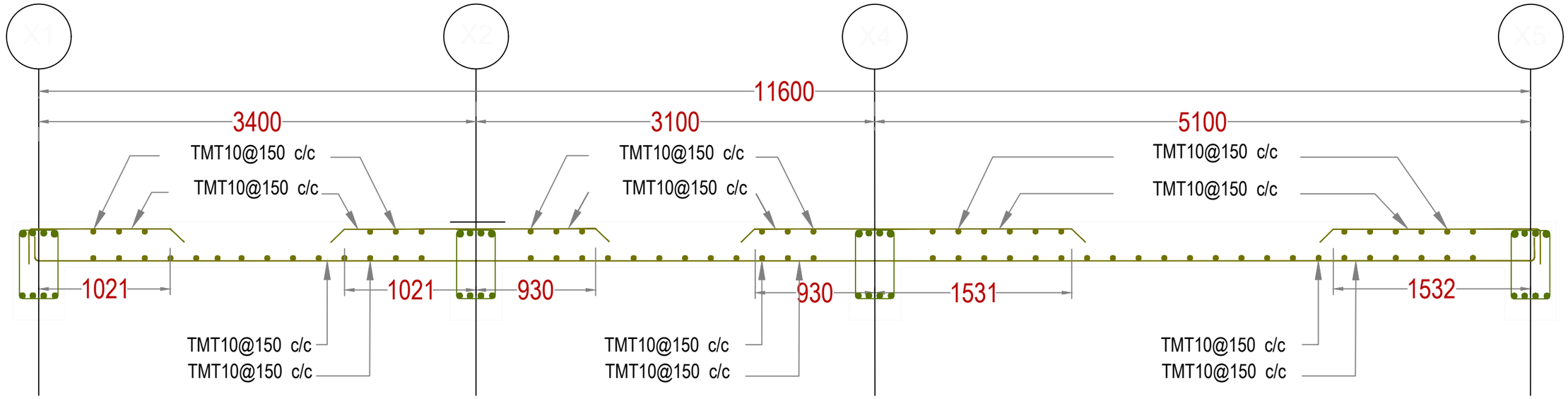

First Floor Slab Details at Section A-A
(NOTE : 150 mm THICKNESS OF SLAB)

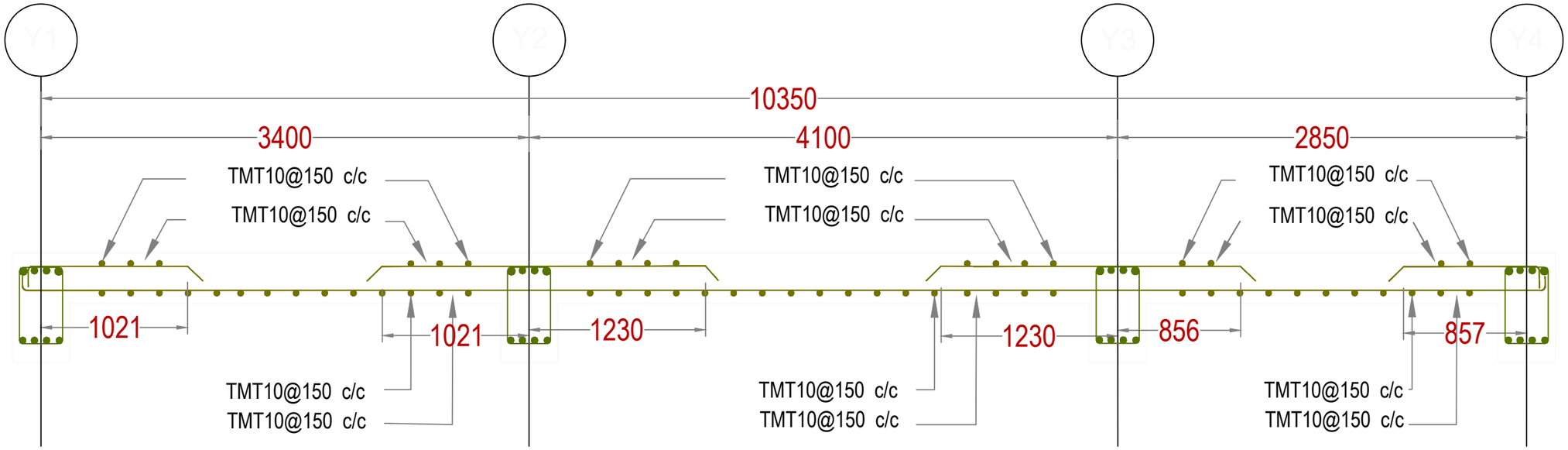

First Floor Slab Details at Section B-B
(NOTE : 150 mm THICKNESS OF SLAB)

Khorlochhu

STRUCTURAL DRAWING

PROJECT TITLE	DRAWING TITLE
Construction of Doksum Primary School	SLAB_SECTION_A-A_&_SECTION_B-B

NOTES

1. ALL DIMENSIONS ARE IN MILLIMETER & ELEVATION IN METER UNLESS SPECIFIED OTHERWISE.
2. ALL DIMENSIONS MEASURE UNFINISHED SURFACES UNLESS SPECIFIED OTHERWISE.
3. DIMENSIONS ARE TO BE READ AND NOT SCALED OFF.
4. ANY DISCREPANCIES IN THE DRAWING ARE TO BE BROUGHT TO THE IMMEDIATE NOTICE OF THE SUPERVISION TEAM.

CHECKED	APPROVED	DATE	DRAWING NO.
			STR_25
		MARCH, 2026	SCALE
			NTS

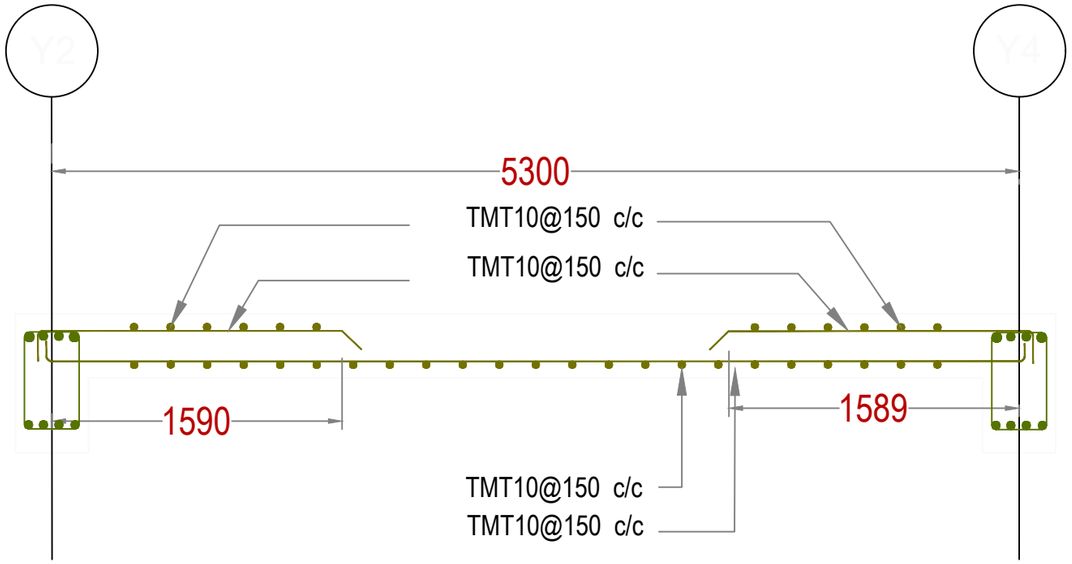

First Floor Slab Details at Section C-C
(NOTE : 150 mm THICKNESS OF SLAB)

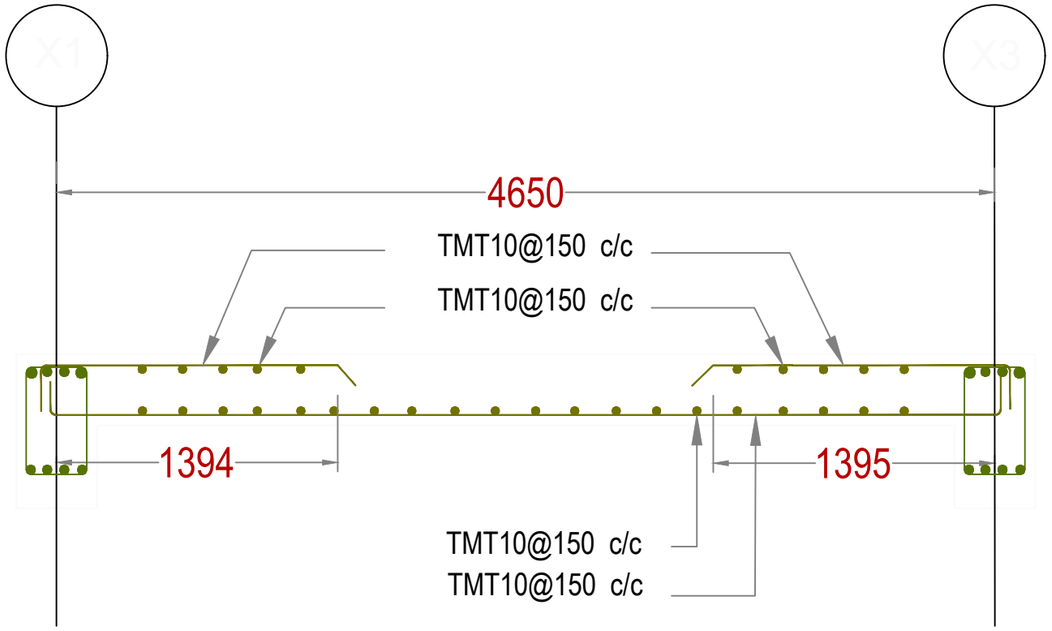

First Floor Slab Details at Section D-D
(NOTE : 150 mm THICKNESS OF SLAB)

Khorlochhu

STRUCTURAL DRAWING

PROJECT TITLE	DRAWING TITLE
Construction of Doksum Primary School	SLAB_SECTION_C-C_&_SECTION_D-D

NOTES

1. ALL DIMENSIONS ARE IN MILLIMETER & ELEVATION IN METER UNLESS SPECIFIED OTHERWISE.
2. ALL DIMENSIONS MEASURE UNFINISHED SURFACES UNLESS SPECIFIED OTHERWISE.
3. DIMENSIONS ARE TO BE READ AND NOT SCALED OFF.
4. ANY DISCREPANCIES IN THE DRAWING ARE TO BE BROUGHT TO THE IMMEDIATE NOTICE OF THE SUPERVISION TEAM.

CHECKED	APPROVED	DATE	DRAWING NO.
			STR_26
		MARCH, 2026	SCALE
			NTS

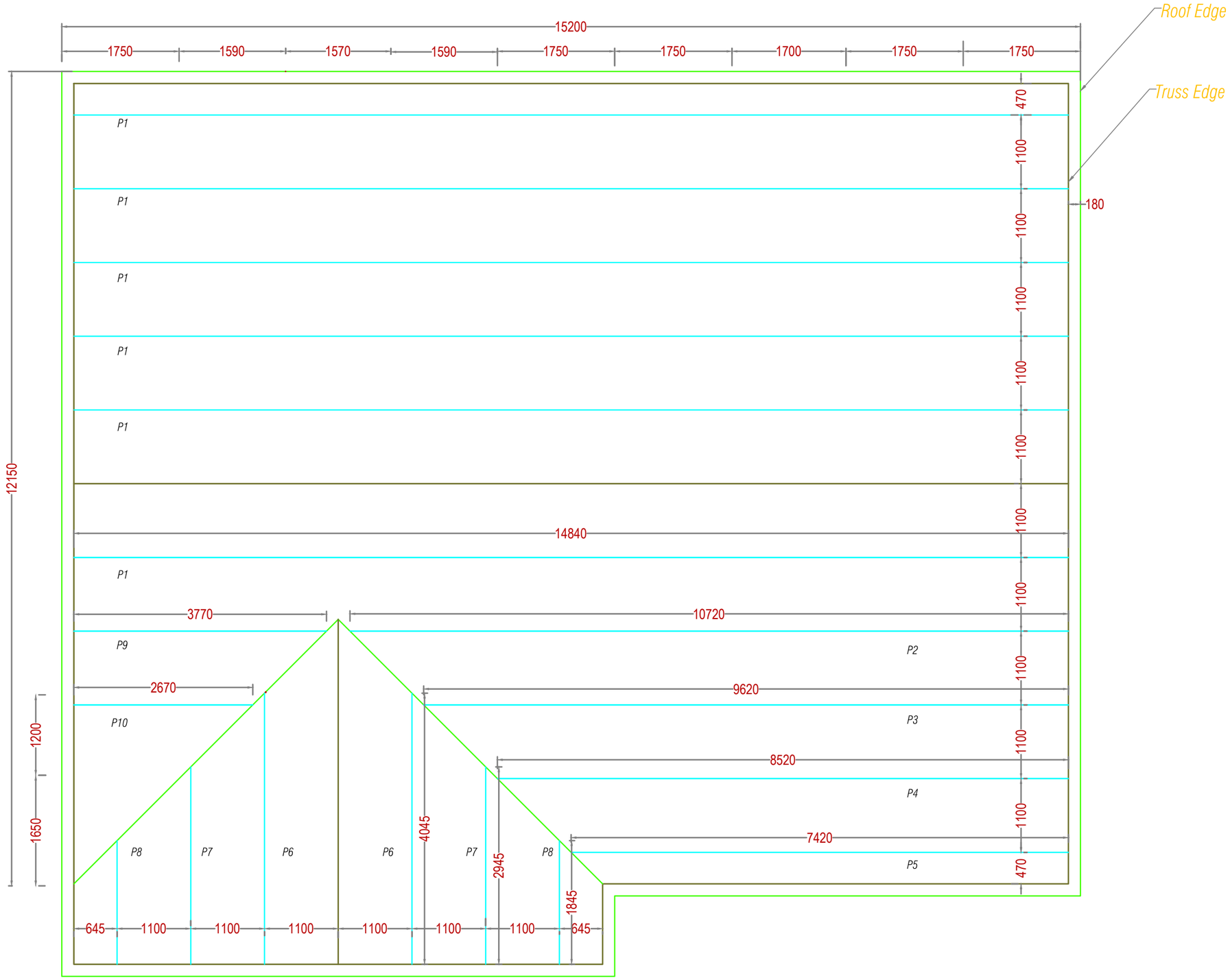

ROOF WITH ONLY PURLIN

Khorlochhu

STRUCTURAL DRAWING

PROJECT TITLE	DRAWING TITLE
Construction of Doksum Primary School	MAIN_ROOF_TRUSS_LAYOUT

NOTES

1. ALL DIMENSIONS ARE IN MILLIMETER & ELEVATION IN METER UNLESS SPECIFIED OTHERWISE.
2. ALL DIMENSIONS MEASURE UNFINISHED SURFACES UNLESS SPECIFIED OTHERWISE.
3. DIMENSIONS ARE TO BE READ AND NOT SCALED OFF.
4. ANY DISCREPANCIES IN THE DRAWING ARE TO BE BROUGHT TO THE IMMEDIATE NOTICE OF THE SUPERVISION TEAM.

CHECKED	APPROVED	DATE	DRAWING NO.
			STR_27
		MARCH, 2026	SCALE
			NTS

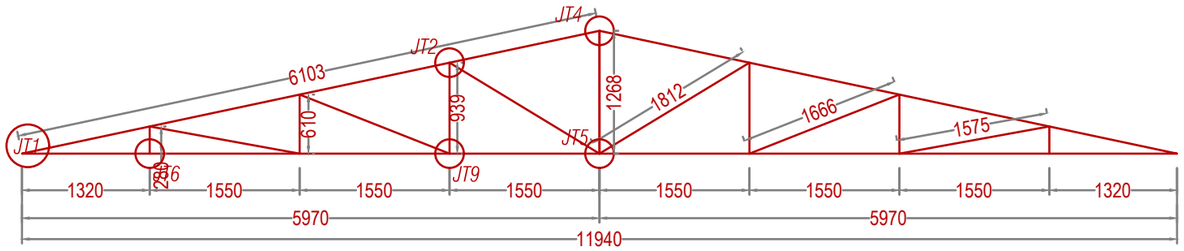

Truss 1 (4.no)

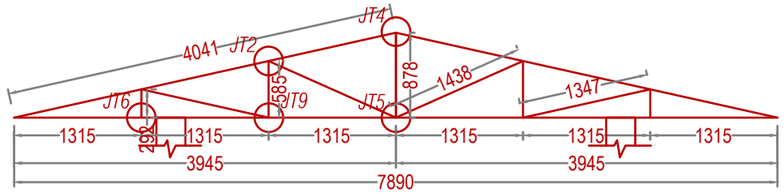

Truss 6 (1.no)

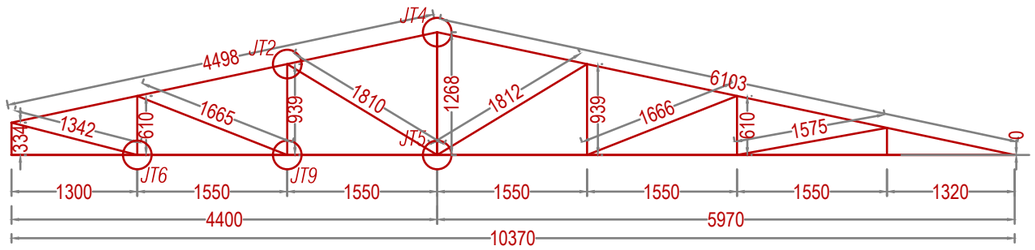

Truss 2 (2.no)

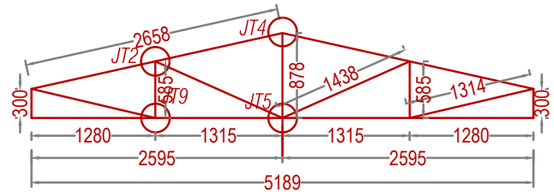

Truss 5 (1.no)

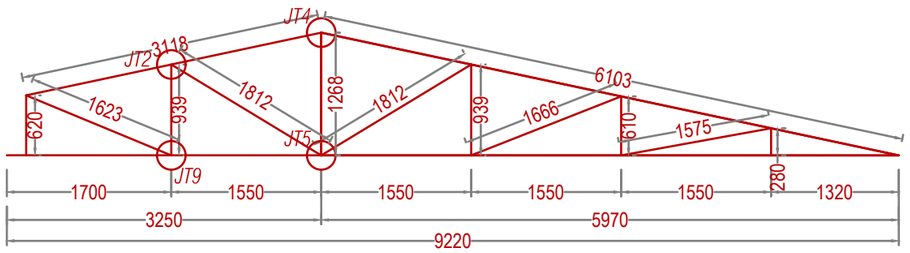

Truss 3 (4.no)

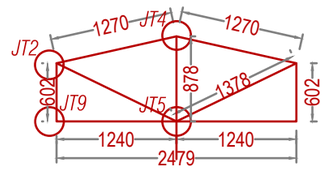

Truss 4 (1.no)

Khorlochhu

STRUCTURAL DRAWING

PROJECT TITLE	DRAWING TITLE
Construction of Doksum Primary School	TRUSS_DETAILS

NOTES

1. ALL DIMENSIONS ARE IN MILLIMETER & ELEVATION IN METER UNLESS SPECIFIED OTHERWISE.
2. ALL DIMENSIONS MEASURE UNFINISHED SURFACES UNLESS SPECIFIED OTHERWISE.
3. DIMENSIONS ARE TO BE READ AND NOT SCALED OFF.
4. ANY DISCREPANCIES IN THE DRAWING ARE TO BE BROUGHT TO THE IMMEDIATE NOTICE OF THE SUPERVISION TEAM.

CHECKED	APPROVED	DATE	DRAWING NO.
			STR_28
		MARCH, 2026	SCALE
			NTS

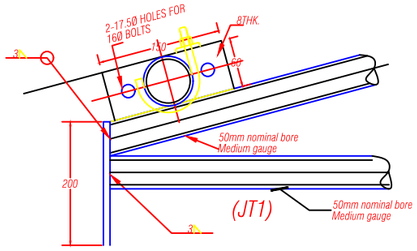

(JT1)

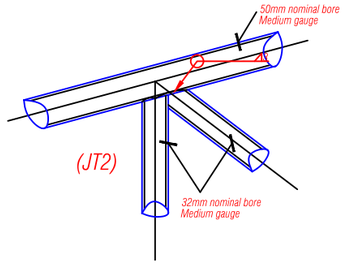

(JT2)

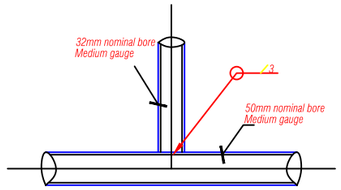

(JT3)

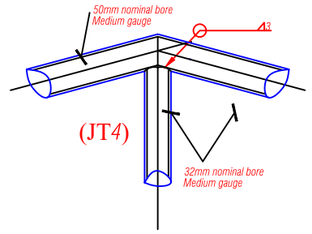

(JT4)

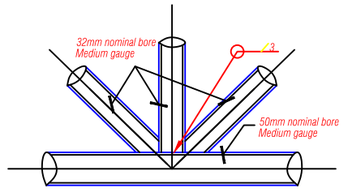

(JT5)

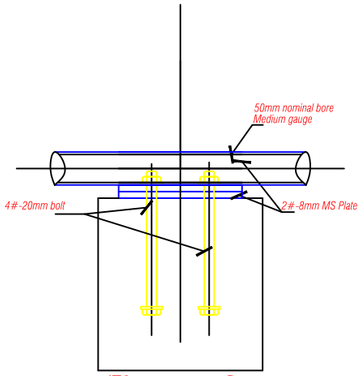

JT6 support on Beam

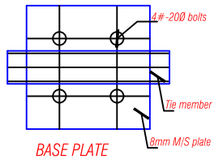

BASE PLATE

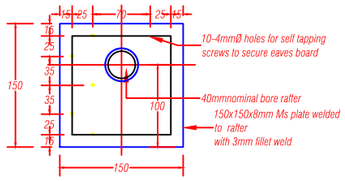

EAVES PLATE detail

NOTES:
Tubular steel of YST22 grade to be used.
All connections to be with fillet weld of 3mm size
Purlin 32mm nominal bore, medium gauge @1100c/c

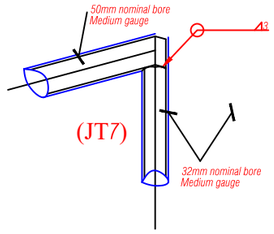

(JT7)

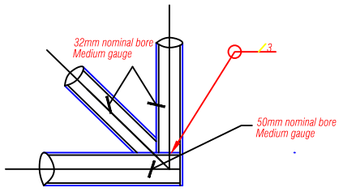

(JT8)

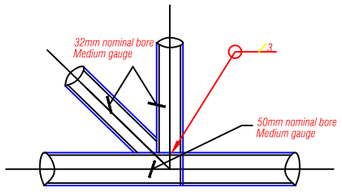

(JT9)

SCHEDULE OF TRUSS MEMBERS

Sl.No	Particulars	Size	Nominal Bore (NB)	Class
1.	Rafter & Bottom Chord	60.30 OM	50	Medium
2.	Vertical & Inclined Chord	48.30 OM	32	Medium
3.	Purlin	48.30 OM	32	Medium
PURLINS SHALL BE PROVIDED @ 1200 mm C/C				

Khorlochhu

STRUCTURAL DRAWING

PROJECT TITLE	DRAWING TITLE
Construction of Doksum Primary School	TRUSS_DETAILS

NOTES

1. ALL DIMENSIONS ARE IN MILLIMETER & ELEVATION IN METER UNLESS SPECIFIED OTHERWISE.
2. ALL DIMENSIONS MEASURE UNFINISHED SURFACES UNLESS SPECIFIED OTHERWISE.
3. DIMENSIONS ARE TO BE READ AND NOT SCALED OFF.
4. ANY DISCREPANCIES IN THE DRAWING ARE TO BE BROUGHT TO THE IMMEDIATE NOTICE OF THE SUPERVISION TEAM.

CHECKED	APPROVED	DATE	DRAWING NO.
			STR_29
		MARCH, 2026	SCALE
			NTS

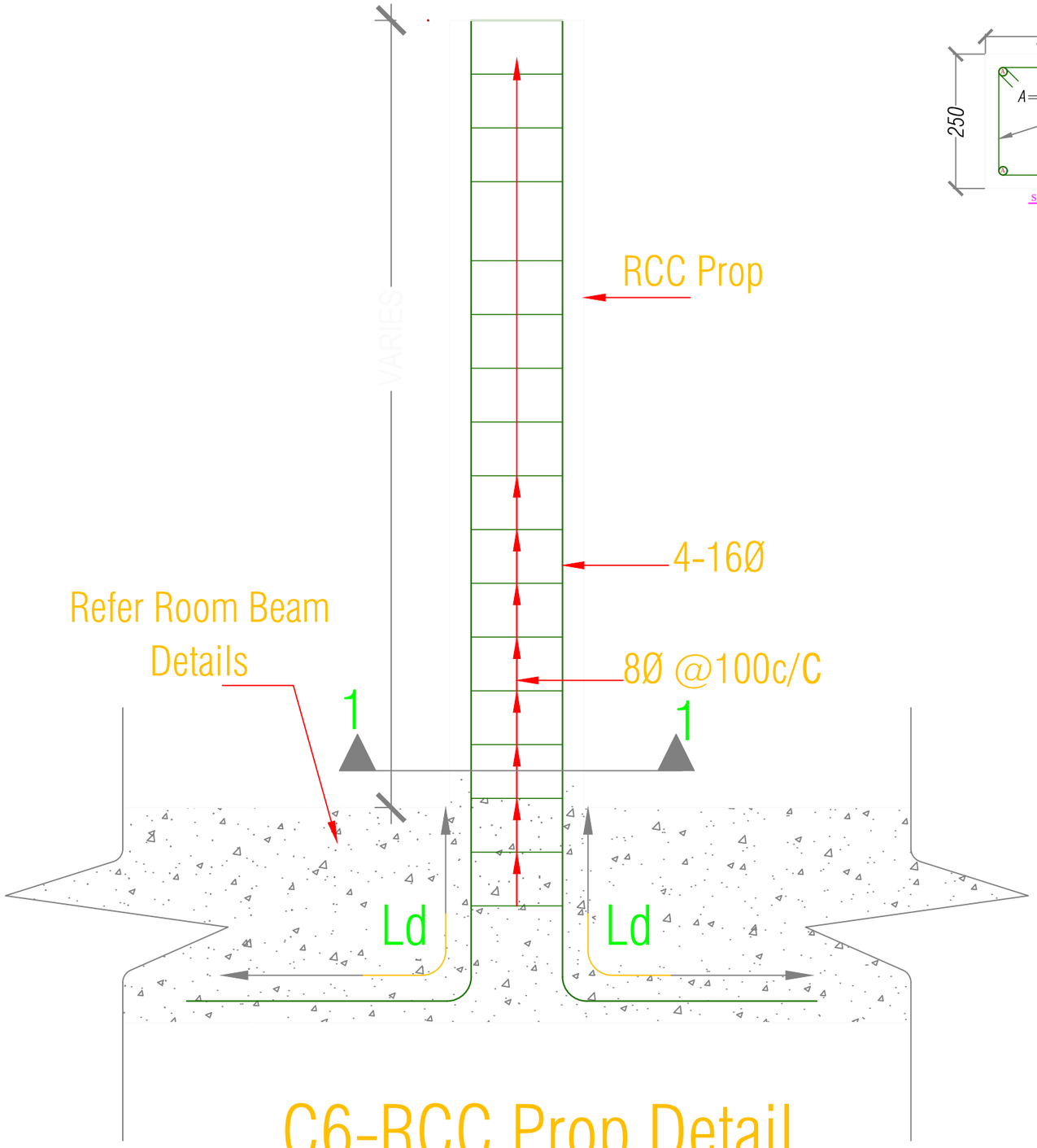

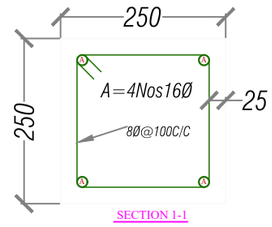

C6-RCC Prop Detail

Khorlochhu	STRUCTURAL DRAWING	NOTES	CHECKED	APPROVED	DATE	DRAWING NO.
	PROJECT TITLE: Construction of Doksum Primary School	1. ALL DIMENSIONS ARE IN MILLIMETER & ELEVATION IN METER UNLESS SPECIFIED OTHERWISE. 2. ALL DIMENSIONS MEASURE UNFINISHED SURFACES UNLESS SPECIFIED OTHERWISE. 3. DIMENSIONS ARE TO BE READ AND NOT SCALED OFF. 4. ANY DISCREPANCIES IN THE DRAWING ARE TO BE BROUGHT TO THE IMMEDIATE NOTICE OF THE SUPERVISION TEAM.				STR_30
	DRAWING TITLE: RCC_PROP_DETAILS				MARCH, 2026	SCALE: NTS

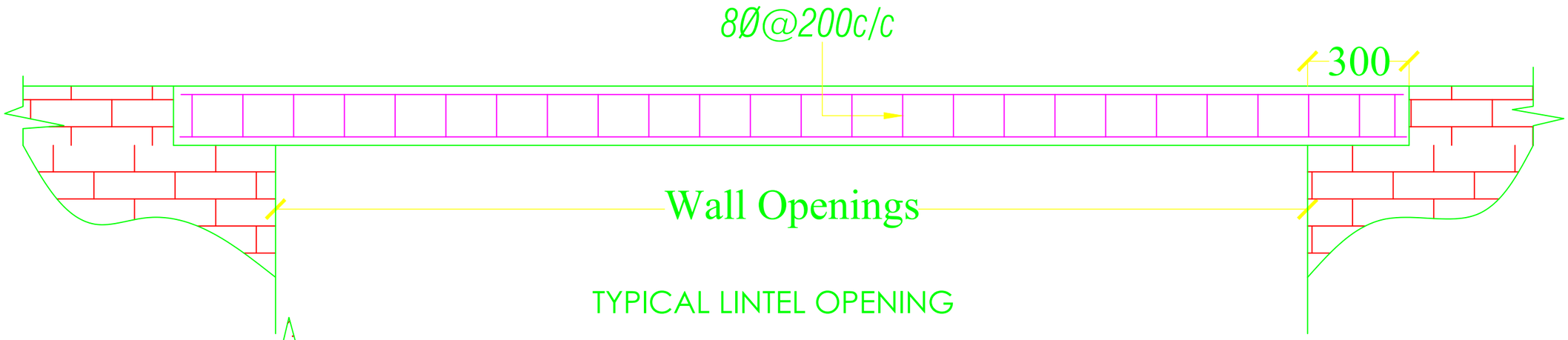

TYPICAL LINTEL OPENING

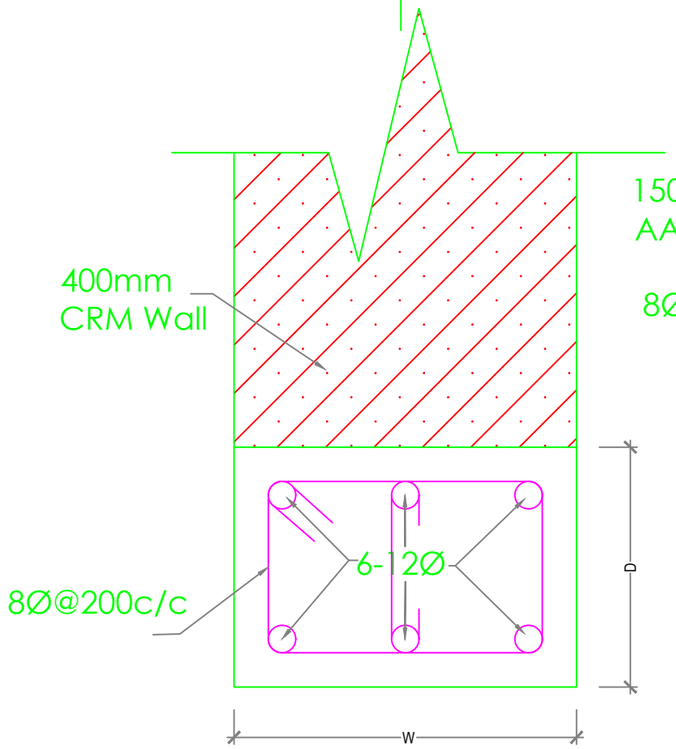

OPENING WITHIN EXTERNAL WALL

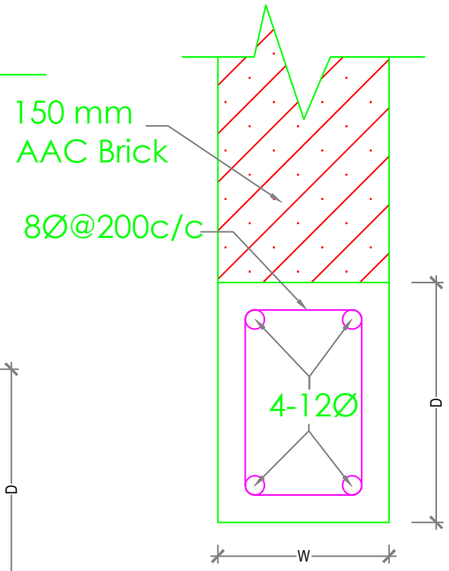

OPENING WITHIN INTERNAL WALL

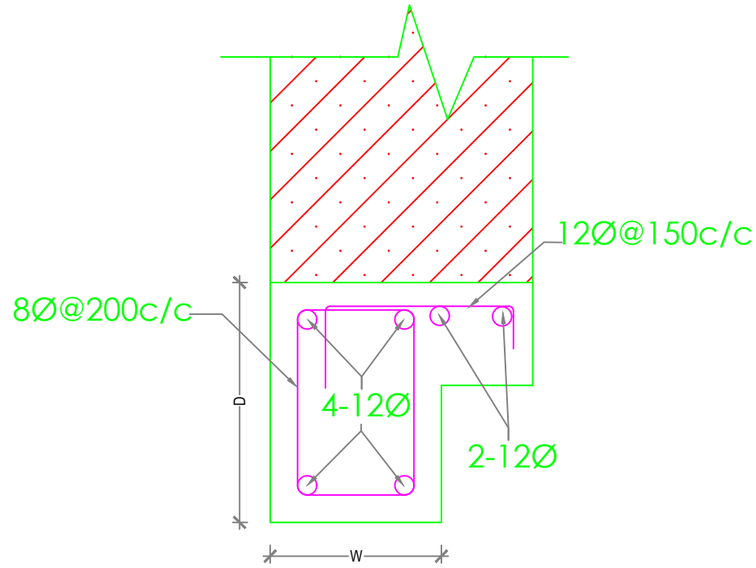

LINTEL WITH CORNICE

NOTE :

1. Depth (D) of Lintels is to be taken as shown in Architectural drawings, especially for main windows and should be taken as 150mm for all other Lintels.
2. Width (W) of Lintels is to be taken equal to the wall thickness.

Khorlochhu	STRUCTURAL DRAWING	NOTES	CHECKED	APPROVED	DATE	DRAWING NO.
	PROJECT TITLE: Construction of Doksum Primary School	1. ALL DIMENSIONS ARE IN MILLIMETER & ELEVATION IN METER UNLESS SPECIFIED OTHERWISE. 2. ALL DIMENSIONS MEASURE UNFINISHED SURFACES UNLESS SPECIFIED OTHERWISE. 3. DIMENSIONS ARE TO BE READ AND NOT SCALED OFF. 4. ANY DISCREPANCIES IN THE DRAWING ARE TO BE BROUGHT TO THE IMMEDIATE NOTICE OF THE SUPERVISION TEAM.				STR_31
	DRAWING TITLE: LINTEL_OPENING				MARCH, 2026	SCALE: NTS

ELECTRICAL DRAWINGS

PRINCIPAL QUARTER

Owner - Khorlochhu Hydro Power Limited
Location - Doksum New Township, Trashiyangtse

Khorlochhu

SYMBOLS	Specifications
	60W,1200 sweep Ceiling fan
	6W Led Ceiling Light
	20W Led Tube Light
	6W Wall mounted light
	6A/10A Modular switches.
	Exhaust fan, 80W for calculation.
	5/6 Pin 16 Amps Switch/Socket Combined with indicator, 1x2000W
	Switch Board with 6A Socket.
	Call Bell, 1x60W for calculation.
	Call Bell Switch (6/10A).
TV	Television point outlet Socket.
	Telephone Outlet Socket, RJ11.
SDB	Sub Distribution Board (SDB)
	Main Control Panel Board (MCPB)
JB	Television Terminal Cabinet (Junction Box)

Notes 1:
1. Light points wiring shall be with 1.5sq.mm PVC insulated copper conductor
2. Light supply circuit shall be done with 2.5sq.mm PVC insulated copper conductor
3. Power circuits shall be done with 4sq.mm PVC insulated copper conductor.
4. Different conduit lines shall be used for wiring with different phases.
5. Power points wiring below window shall not be dropped from above but supplied from below the window seal level.
6. Light switchboards shall be 1400mm from finished floor level to top.
7. Power sockets shall be 400mm from finished floor level to top except in Kitchen or toilets/bathrooms (wet area) where the height shall be 1400mm from floor to bottom and for air condition the height shall be 1750mm from finished floor level.
8. No power point shall be looped.
9. Main switch boards are to be flushed in the wall 230mm below the ceiling level.

Notes 2: (As recommended by service providers)
1. Telephone wiring shall be with 0.5Sq.mm PVC insulated and sheathed copper conductor.
2. Ducting to be at least 500mm away from electrical cable routes.
3. To provide bridging where telephone and electric cables cross.
4. Telephone terminal cabinet shall be 300x300x150mm with hole punches to receive 25mm dia conduit on all four sides and mounted at 2500mm above floor level.
5. Cable ducting shall be provided with 25mm dia PVC conduit and shall be common for drawing of TV cables.
6. RJ-11 sockets shall be provided for telephone points.
7. To supply direct lines for all the rooms where points are marked, from the terminal cabinet.
8. The incoming lines shall be brought and connected to incoming side of the terminal cabinet from where lines to all the rooms commence

Khorlochhu

ELECTRICAL DRAWING

PROJECT TITLE	DRAWING TITLE
Construction of Doksum Primary School	NOTE_&_SPECIFICATION

NOTES
1. ALL DIMENSIONS ARE IN MILLIMETER & ELEVATION IN METER UNLESS SPECIFIED OTHERWISE.
2. ALL DIMENSIONS MEASURE UNFINISHED SURFACES UNLESS SPECIFIED OTHERWISE.
3. DIMENSIONS ARE TO BE READ AND NOT SCALED OFF.
4. ANY DISCREPANCIES IN THE DRAWING ARE TO BE BROUGHT TO THE IMMEDIATE NOTICE OF THE SUPERVISION TEAM.

CHECKED	APPROVED	DATE	DRAWING NO.
			EL_1
		MARCH, 2026	SCALE
			NTS

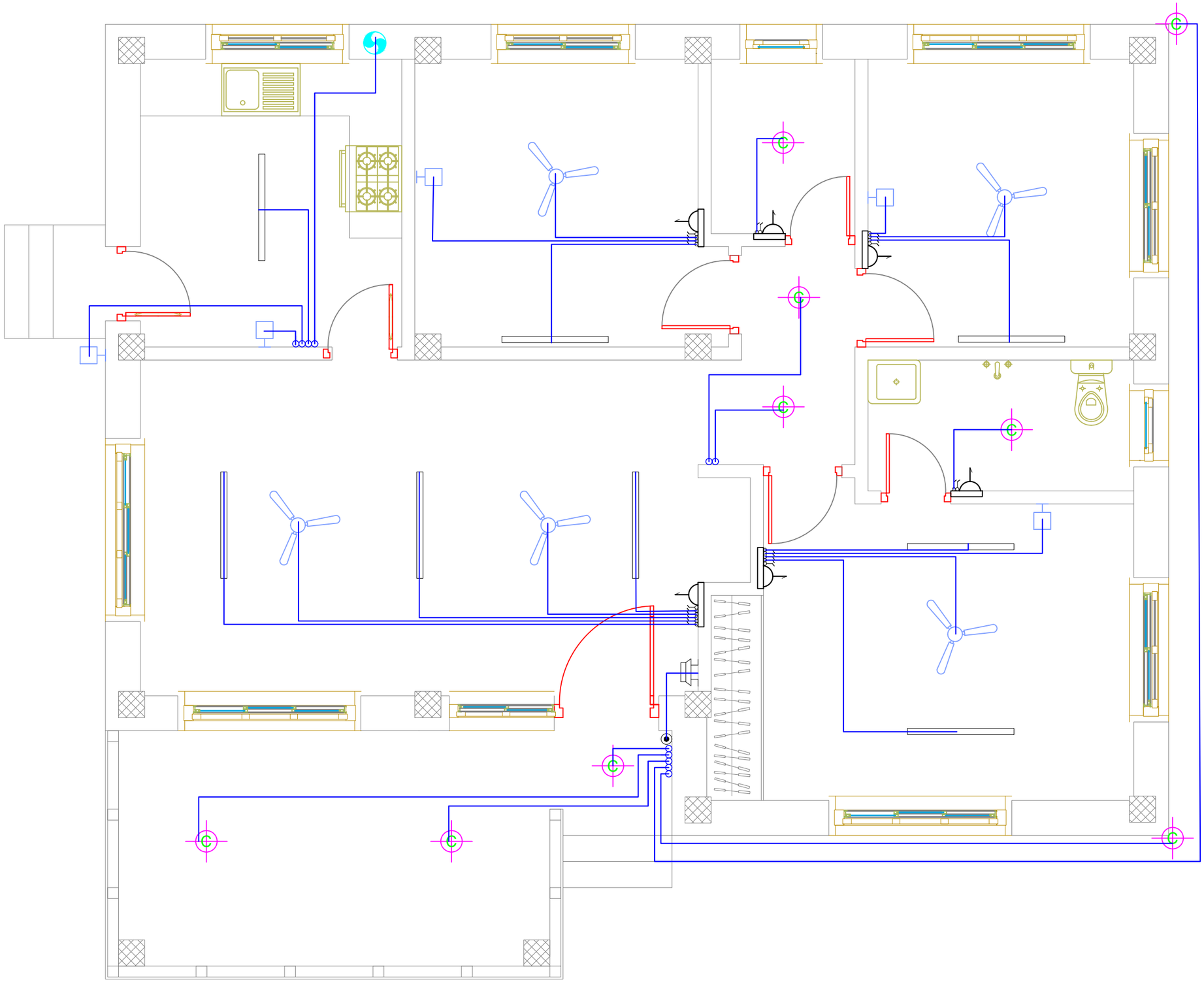

ELECTRICAL DRAWING

PROJECT TITLE	DRAWING TITLE
Construction of Doksum Primary School	FITTING_POINTS

NOTES

1. ALL DIMENSIONS ARE IN MILLIMETER & ELEVATION IN METER UNLESS SPECIFIED OTHERWISE.
2. ALL DIMENSIONS MEASURE UNFINISHED SURFACES UNLESS SPECIFIED OTHERWISE.
3. DIMENSIONS ARE TO BE READ AND NOT SCALED OFF.
4. ANY DISCREPANCIES IN THE DRAWING ARE TO BE BROUGHT TO THE IMMEDIATE NOTICE OF THE SUPERVISION TEAM.

CHECKED	APPROVED	DATE	DRAWING NO.
			EL_2
		MARCH, 2026	SCALE
			NTS

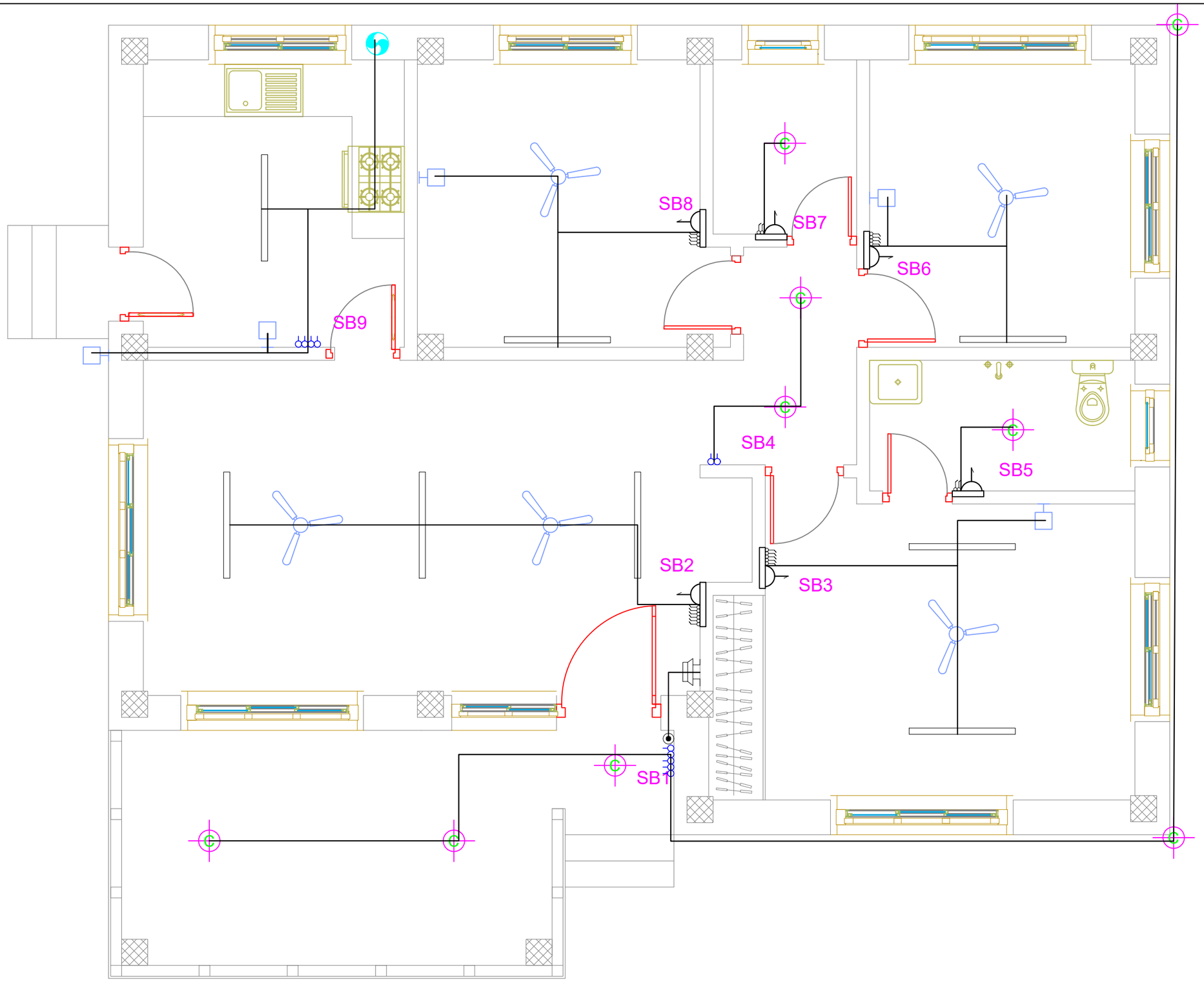

Khorlochhu

ELECTRICAL DRAWING

PROJECT TITLE	DRAWING TITLE
Construction of Doksum Primary School	FITTINGS_&_CONDUCT_LAYOUT

NOTES

1. ALL DIMENSIONS ARE IN MILLIMETER & ELEVATION IN METER UNLESS SPECIFIED OTHERWISE.
2. ALL DIMENSIONS MEASURE UNFINISHED SURFACES UNLESS SPECIFIED OTHERWISE.
3. DIMENSIONS ARE TO BE READ AND NOT SCALED OFF.
4. ANY DISCREPANCIES IN THE DRAWING ARE TO BE BROUGHT TO THE IMMEDIATE NOTICE OF THE SUPERVISION TEAM.

CHECKED	APPROVED	DATE	DRAWING NO.
			EL_3
		MARCH, 2026	SCALE
			NTS

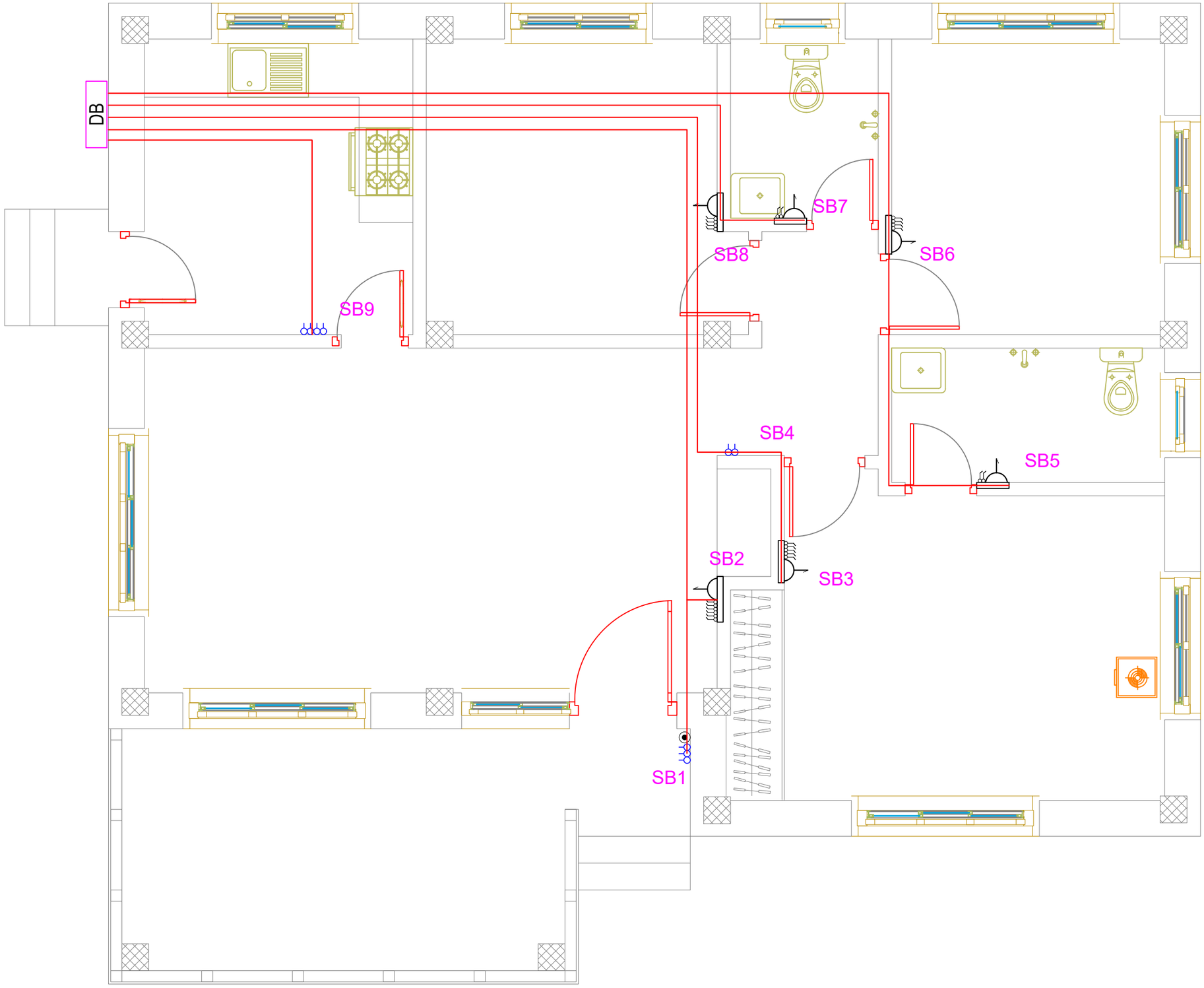

Khorlochhu

ELECTRICAL DRAWING

PROJECT TITLE	DRAWING TITLE
Construction of Doksum Primary School	LIGHT_CIRCUITS_LAYOUT

NOTES

1. ALL DIMENSIONS ARE IN MILLIMETER & ELEVATION IN METER UNLESS SPECIFIED OTHERWISE.
2. ALL DIMENSIONS MEASURE UNFINISHED SURFACES UNLESS SPECIFIED OTHERWISE.
3. DIMENSIONS ARE TO BE READ AND NOT SCALED OFF.
4. ANY DISCREPANCIES IN THE DRAWING ARE TO BE BROUGHT TO THE IMMEDIATE NOTICE OF THE SUPERVISION TEAM.

CHECKED	APPROVED	DATE	DRAWING NO.
			EL_4
		MARCH, 2026	SCALE
			NTS

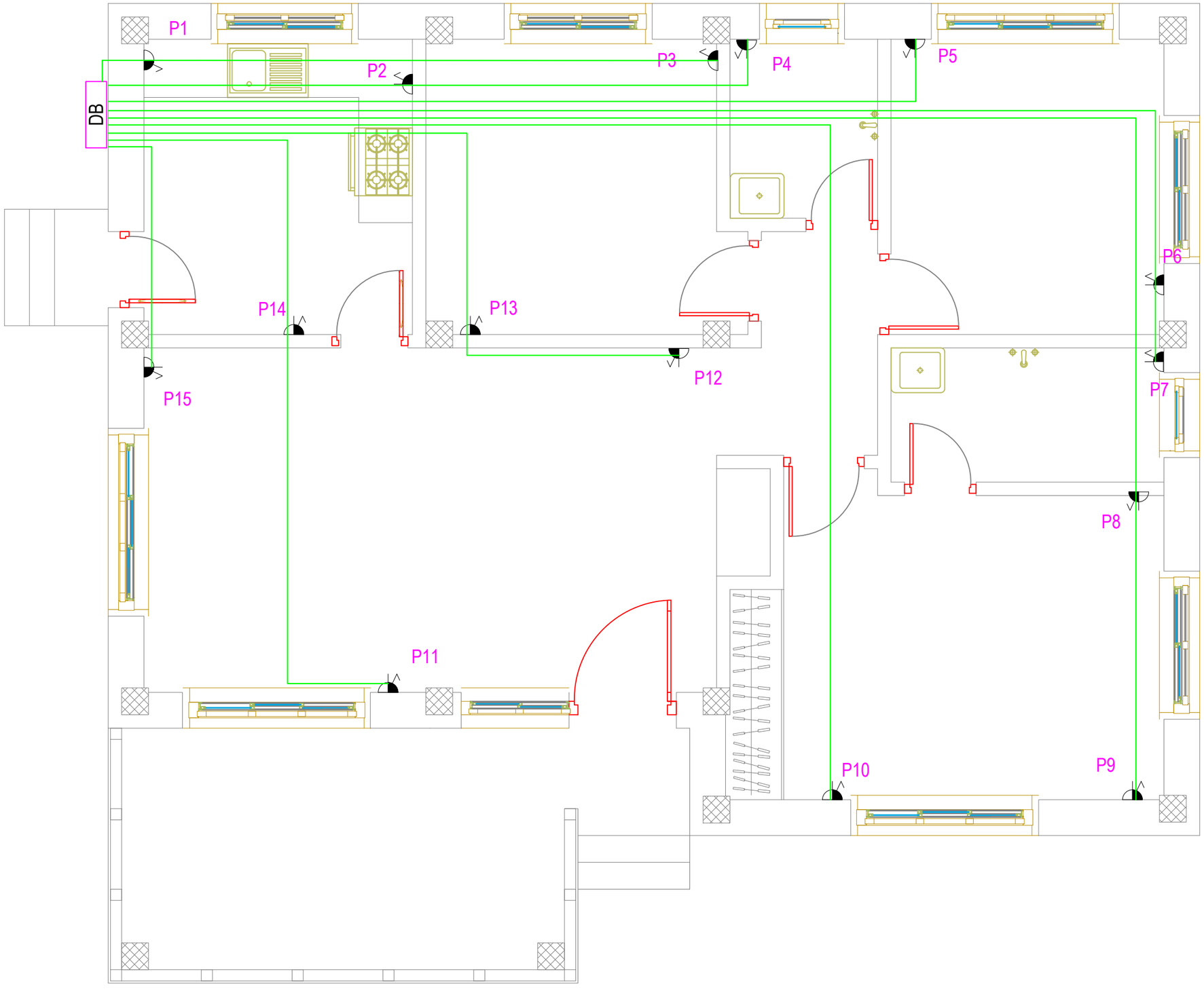

Khorlochhu

ELECTRICAL DRAWING

PROJECT TITLE	DRAWING TITLE
Construction of Doksum Primary School	POWER_SOCKET_OUTLET_&_CONDUITS_LAYOUT

NOTES

1. ALL DIMENSIONS ARE IN MILLIMETER & ELEVATION IN METER UNLESS SPECIFIED OTHERWISE.
2. ALL DIMENSIONS MEASURE UNFINISHED SURFACES UNLESS SPECIFIED OTHERWISE.
3. DIMENSIONS ARE TO BE READ AND NOT SCALED OFF.
4. ANY DISCREPANCIES IN THE DRAWING ARE TO BE BROUGHT TO THE IMMEDIATE NOTICE OF THE SUPERVISION TEAM.

CHECKED	APPROVED	DATE	DRAWING NO.
			EL_5
		MARCH, 2026	SCALE
			NTS

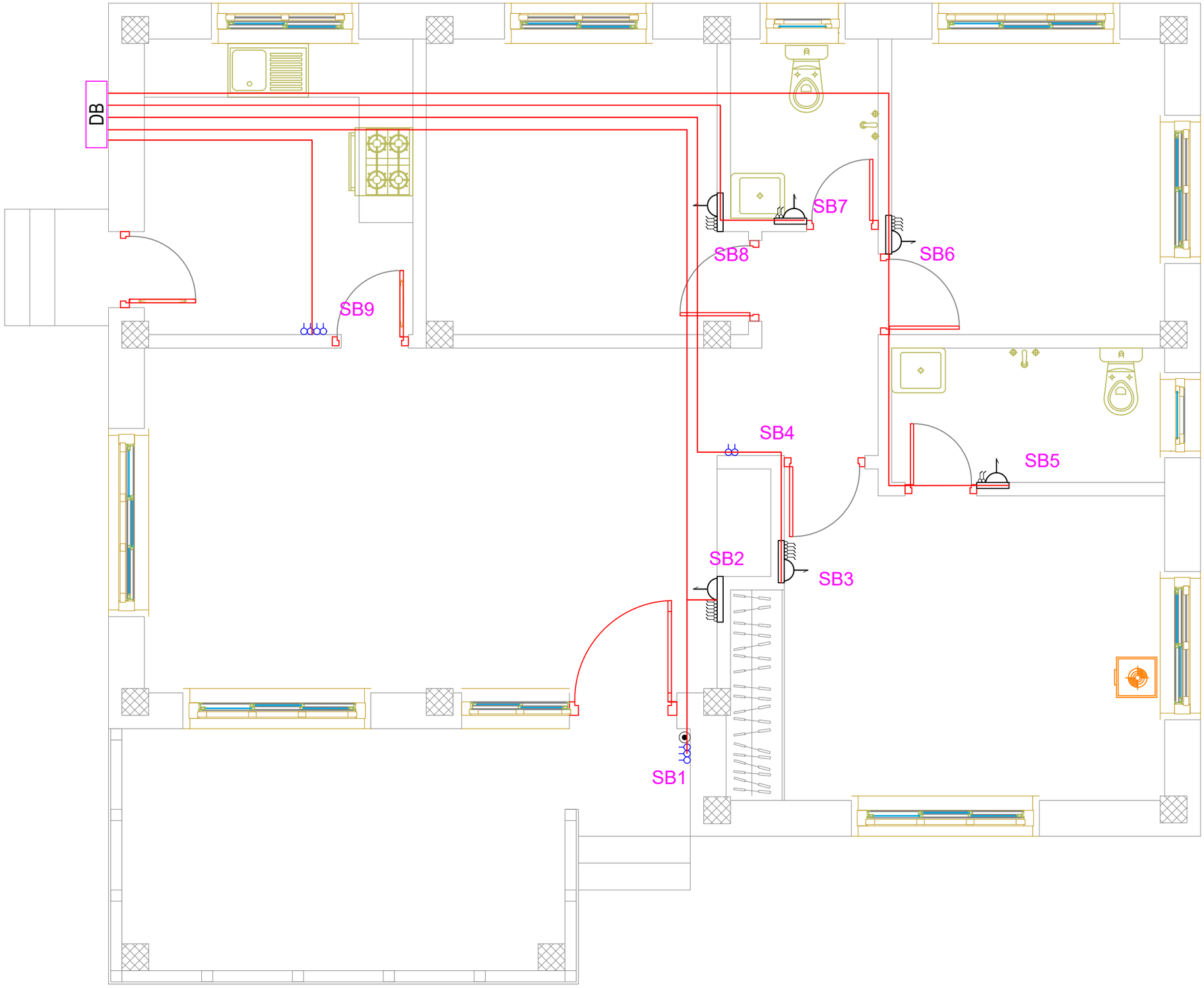

Khorlochhu

ELECTRICAL DRAWING

PROJECT TITLE	DRAWING TITLE
Construction of Doksum Primary School	TELEVISION_OUTLET_LAYOUT

NOTES

1. ALL DIMENSIONS ARE IN MILLIMETER & ELEVATION IN METER UNLESS SPECIFIED OTHERWISE.
2. ALL DIMENSIONS MEASURE UNFINISHED SURFACES UNLESS SPECIFIED OTHERWISE.
3. DIMENSIONS ARE TO BE READ AND NOT SCALED OFF.
4. ANY DISCREPANCIES IN THE DRAWING ARE TO BE BROUGHT TO THE IMMEDIATE NOTICE OF THE SUPERVISION TEAM.

CHECKED	APPROVED	DATE	DRAWING NO.
			EL_6
		MARCH, 2026	SCALE
			NTS

DISTRIBUTION BOARD

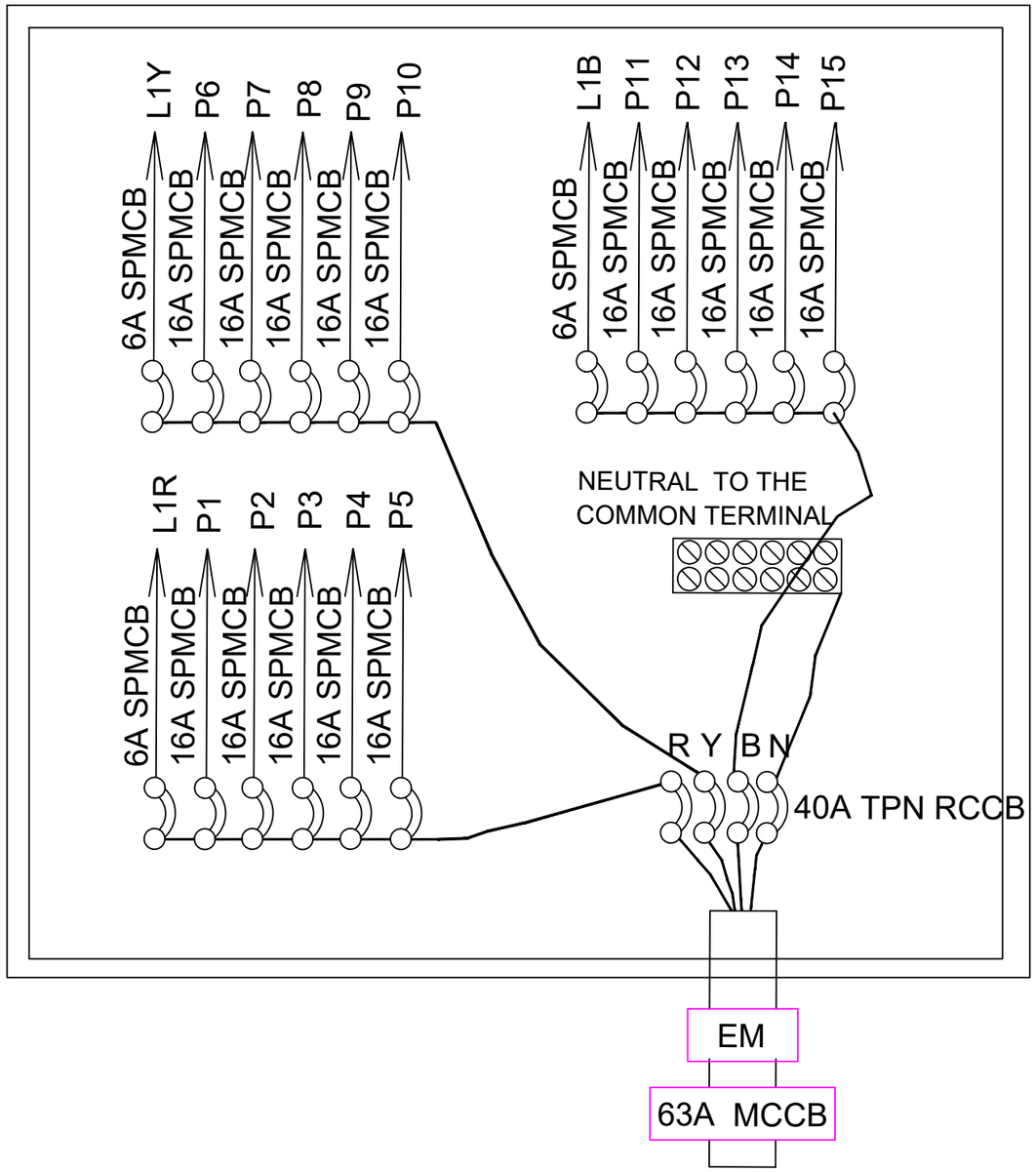

4 CORE,10 sq mm armoured UG cable
or as recommended by BPC

6 WAY TPN DB,DOUBLE DOOR TYPE,& 40A TPN RCCB WITH FOLLOWING OUTGOING:
6A SPMCB - 3 NOs.
16A SPMCB - 15 NOs.

BALANCE LOAD IN WATTS

R-PHASE	Y-PHASE	B-PHASE
L1- 538	L1- 296	L1- 408
P1- 2000	P6- 2000	P11-2000
P2- 2000	P7- 2000	P12-2000
P3- 2000	P8- 2000	P13-2000
P4- 2000	P9- 2000	P14-2000
P5- 2000	P10- 2000	P15-2000
10,538	10,296	10,408

L1R=SB1,SB2,SB3,SB4
L1Y=SB5,SB6
L1B=SB7,SB8,SB9

Connected load= 31,242 W
Demand load(L.F- 60%)= 18,745 W

Khorlochhu

ELECTRICAL DRAWING		NOTES	CHECKED	APPROVED	DATE	DRAWING NO.
PROJECT TITLE	DRAWING TITLE	1. ALL DIMENSIONS ARE IN MILLIMETER & ELEVATION IN METER UNLESS SPECIFIED OTHERWISE. 2. ALL DIMENSIONS MEASURE UNFINISHED SURFACES UNLESS SPECIFIED OTHERWISE. 3. DIMENSIONS ARE TO BE READ AND NOT SCALED OFF. 4. ANY DISCREPANCIES IN THE DRAWING ARE TO BE BROUGHT TO THE IMMEDIATE NOTICE OF THE SUPERVISION TEAM.				EL_7
Construction of Doksum Primary School	MDB_DETAILS				MARCH, 2026	SCALE NTS

ARCHITECTURAL DRAWINGS

CARETAKERS QUARTER

Owner - Khorlochhu Hydro Power Limited
Location - Doksum New Township, Trashiyangtse

Khorlochhu

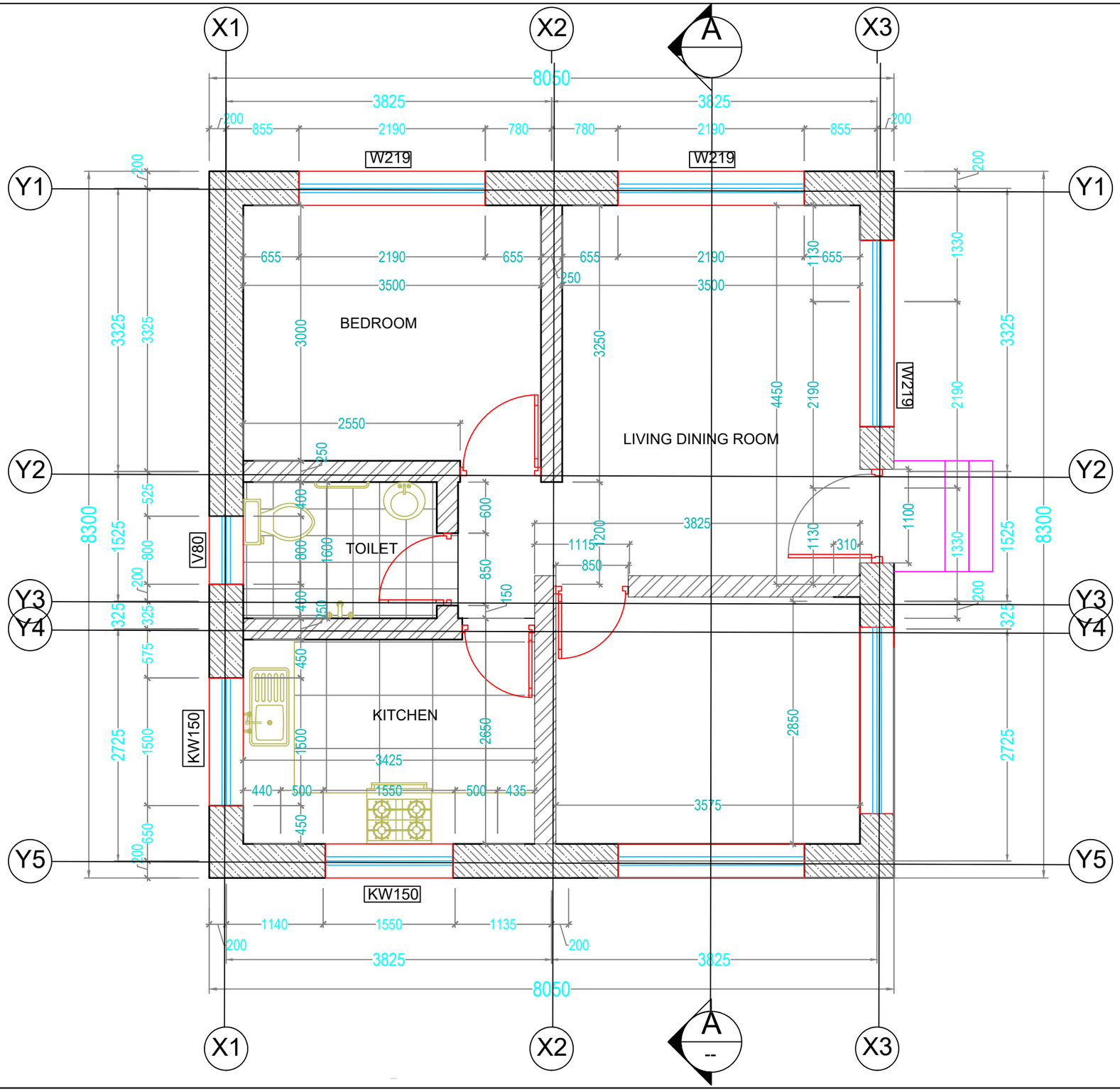

ARCHITECTURAL DRAWING

PROJECT TITLE	DRAWING TITLE
Construction of Doksum Primary School	FLOOR_PLAN

NOTES

1. ALL DIMENSIONS ARE IN MILLIMETER & ELEVATION IN METER UNLESS SPECIFIED OTHERWISE.
2. ALL DIMENSIONS MEASURE UNFINISHED SURFACES UNLESS SPECIFIED OTHERWISE.
3. DIMENSIONS ARE TO BE READ AND NOT SCALED OFF.
4. ANY DISCREPANCIES IN THE DRAWING ARE TO BE BROUGHT TO THE IMMEDIATE NOTICE OF THE SUPERVISION TEAM.

CHECKED	APPROVED	DATE	DRAWING NO.
			AR_01
		MARCH, 2026	SCALE
			NTS

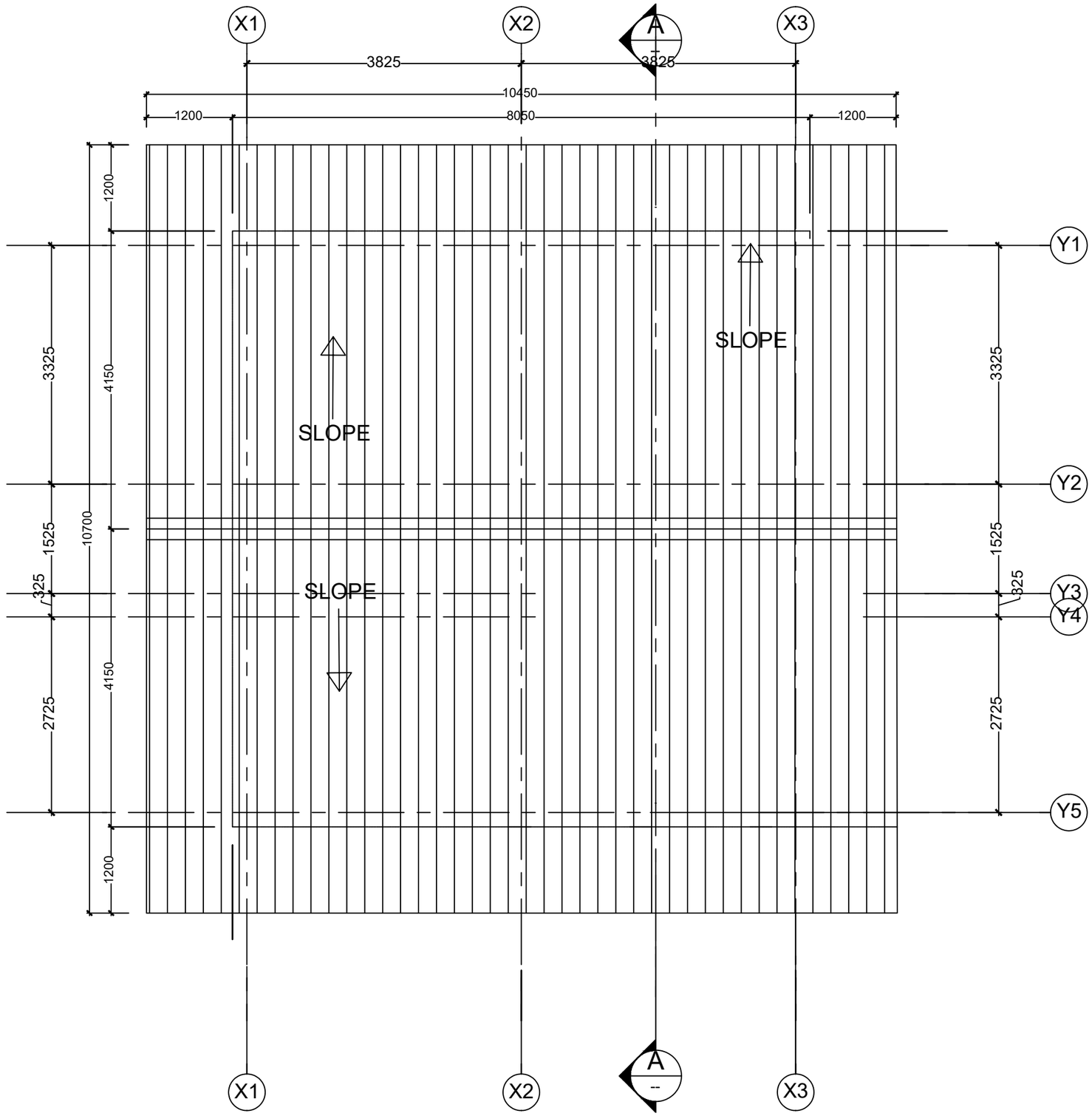

ARCHITECTURAL DRAWING

PROJECT TITLE	DRAWING TITLE
Construction of Doksum Primary School	ROOF_PLAN

NOTES

1. ALL DIMENSIONS ARE IN MILLIMETER & ELEVATION IN METER UNLESS SPECIFIED OTHERWISE.
2. ALL DIMENSIONS MEASURE UNFINISHED SURFACES UNLESS SPECIFIED OTHERWISE.
3. DIMENSIONS ARE TO BE READ AND NOT SCALED OFF.
4. ANY DISCREPANCIES IN THE DRAWING ARE TO BE BROUGHT TO THE IMMEDIATE NOTICE OF THE SUPERVISION TEAM.

CHECKED	APPROVED	DATE	DRAWING NO.
			AR_02
		MARCH, 2026	SCALE
			NTS

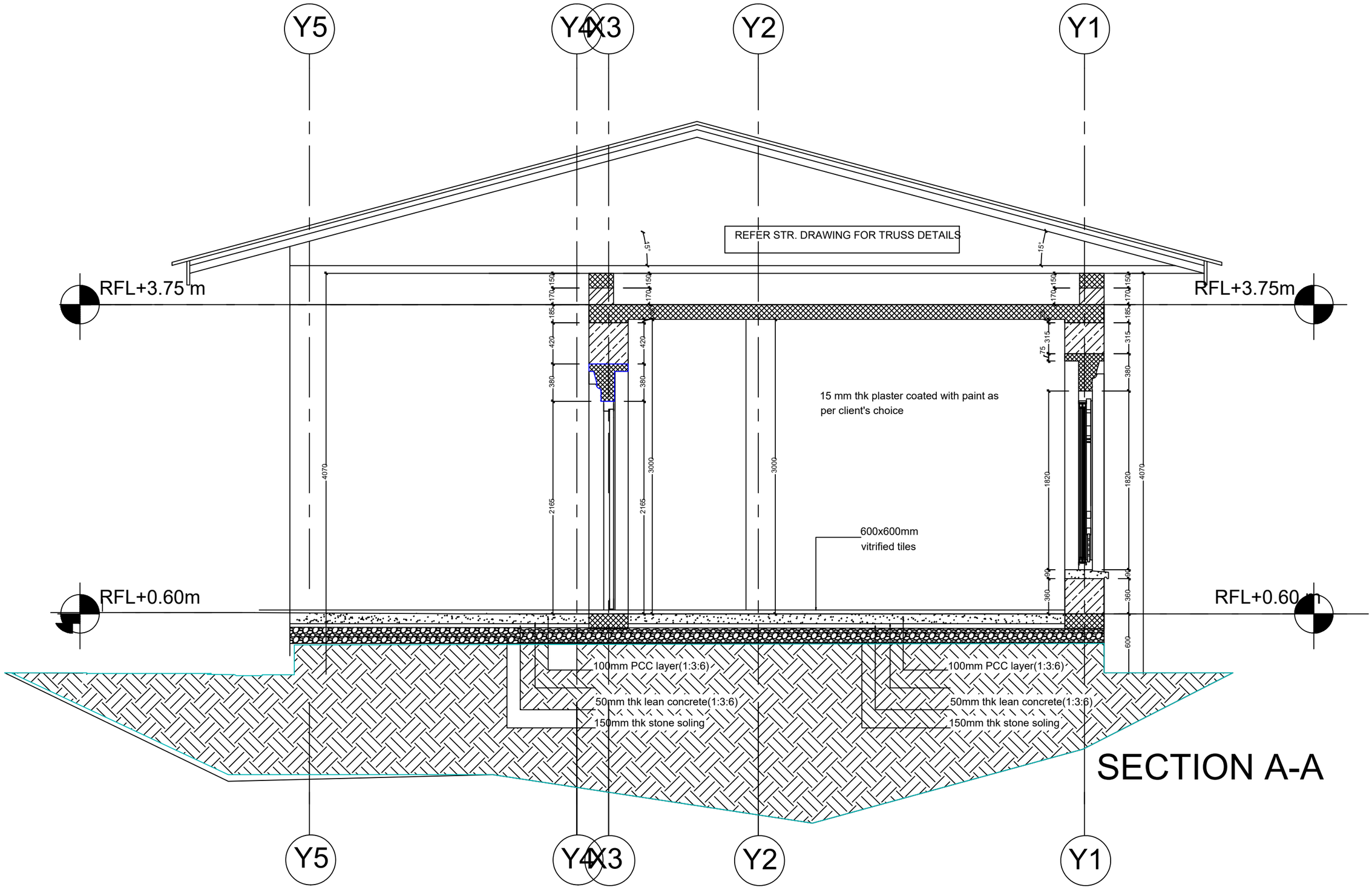

Khorlochhu

ARCHITECTURAL DRAWING

PROJECT TITLE	DRAWING TITLE
Construction of Doksum Primary School	SECTION_A-A

NOTES

1. ALL DIMENSIONS ARE IN MILLIMETER & ELEVATION IN METER UNLESS SPECIFIED OTHERWISE.
2. ALL DIMENSIONS MEASURE UNFINISHED SURFACES UNLESS SPECIFIED OTHERWISE.
3. DIMENSIONS ARE TO BE READ AND NOT SCALED OFF.
4. ANY DISCREPANCIES IN THE DRAWING ARE TO BE BROUGHT TO THE IMMEDIATE NOTICE OF THE SUPERVISION TEAM.

CHECKED	APPROVED	DATE	DRAWING NO.
			AR_03
		MARCH, 2026	SCALE
			NTS

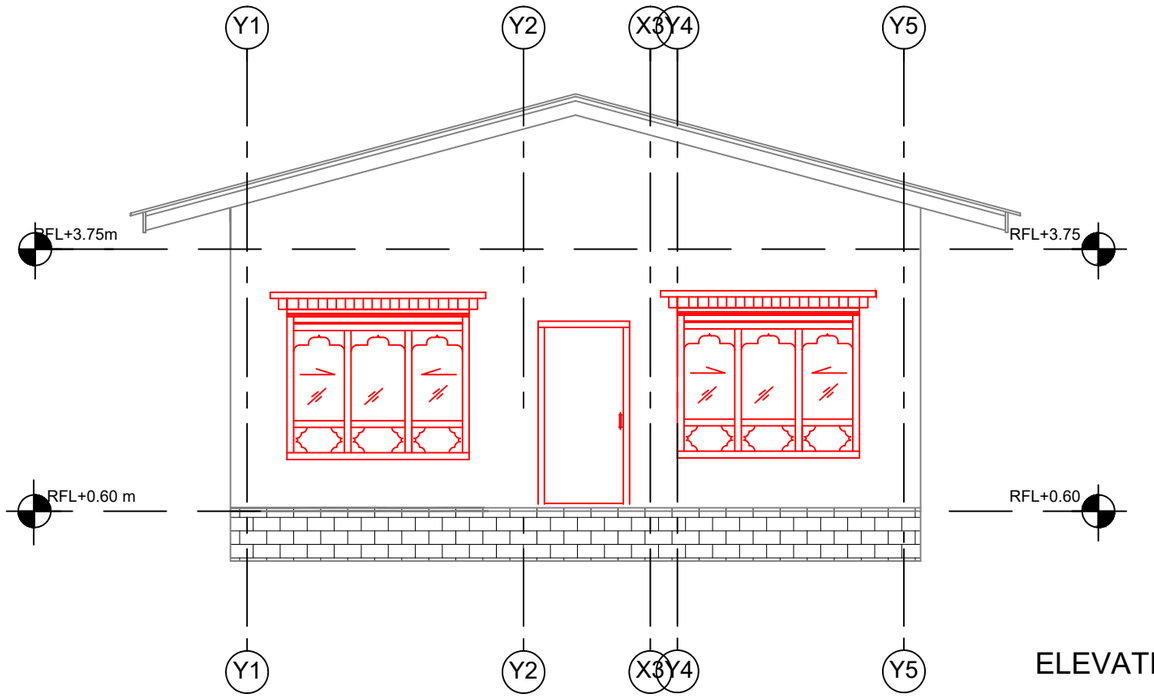

ELEVATION A

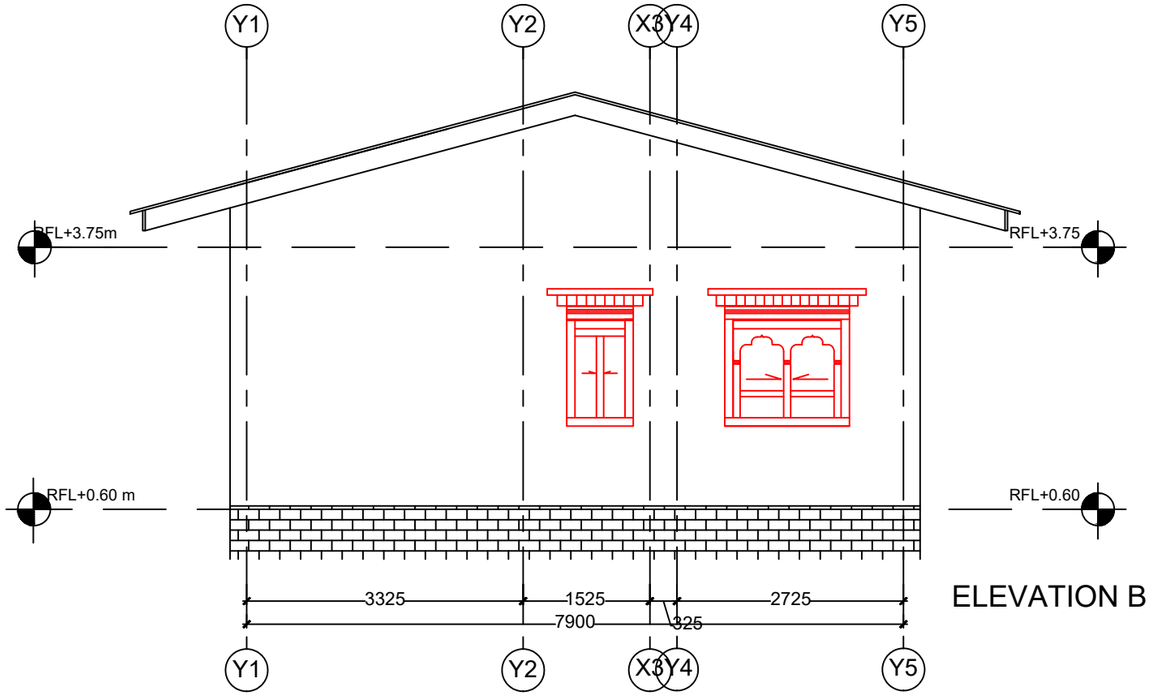

ELEVATION B

Khorlochhu

ARCHITECTURAL DRAWING

PROJECT TITLE	DRAWING TITLE
Construction of Doksum Primary School	ELEVATION_A_&_B

NOTES

1. ALL DIMENSIONS ARE IN MILLIMETER & ELEVATION IN METER UNLESS SPECIFIED OTHERWISE.
2. ALL DIMENSIONS MEASURE UNFINISHED SURFACES UNLESS SPECIFIED OTHERWISE.
3. DIMENSIONS ARE TO BE READ AND NOT SCALED OFF.
4. ANY DISCREPANCIES IN THE DRAWING ARE TO BE BROUGHT TO THE IMMEDIATE NOTICE OF THE SUPERVISION TEAM.

CHECKED	APPROVED	DATE	DRAWING NO.
		MARCH, 2026	AR_04
			SCALE
			NTS

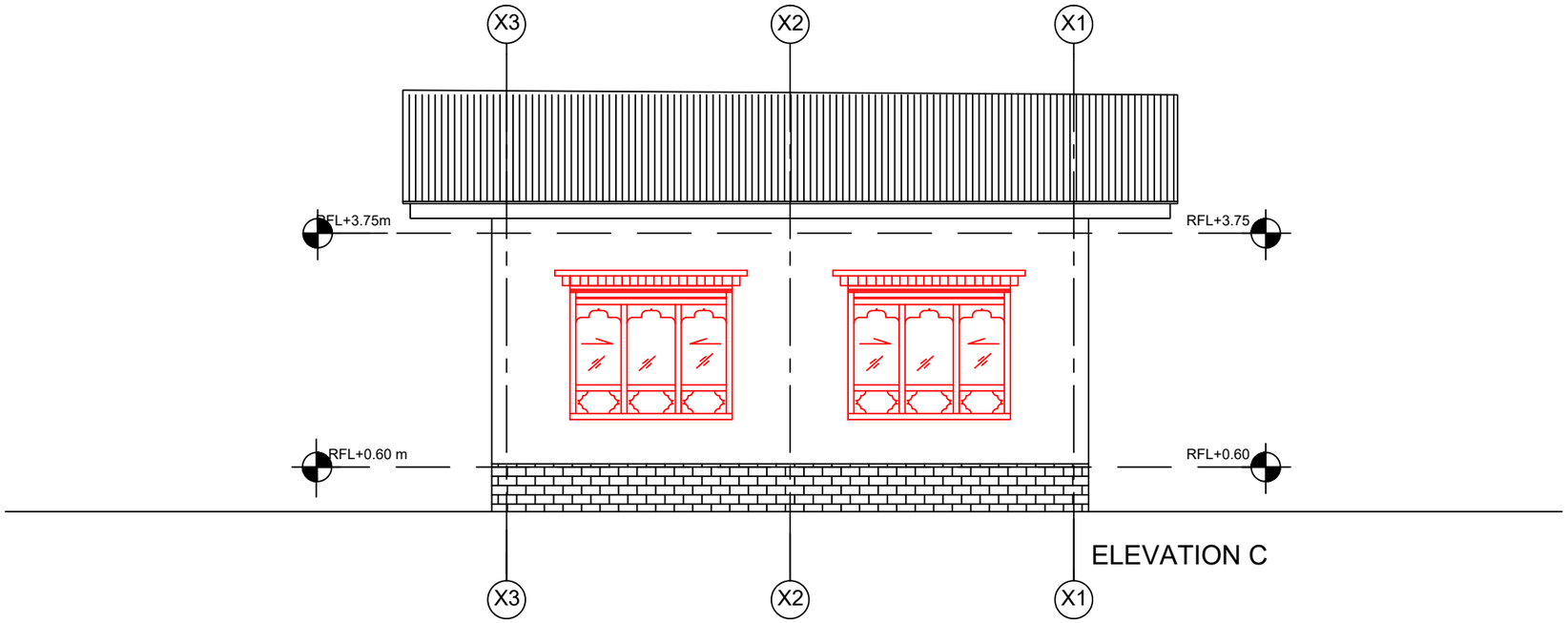

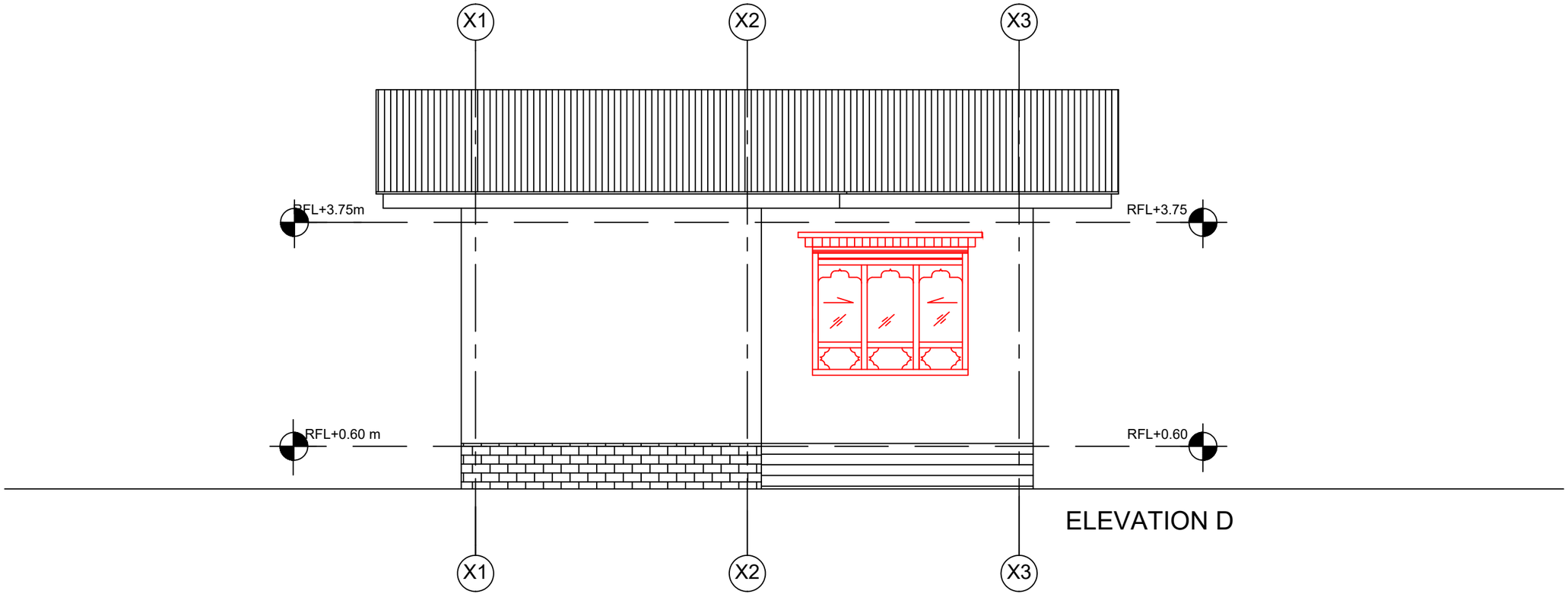

Khorlochhu

ARCHITECTURAL DRAWING

PROJECT TITLE	DRAWING TITLE
Construction of Doksum Primary School	ELEVATION_C_&_D

NOTES

1. ALL DIMENSIONS ARE IN MILLIMETER & ELEVATION IN METER UNLESS SPECIFIED OTHERWISE.
2. ALL DIMENSIONS MEASURE UNFINISHED SURFACES UNLESS SPECIFIED OTHERWISE.
3. DIMENSIONS ARE TO BE READ AND NOT SCALED OFF.
4. ANY DISCREPANCIES IN THE DRAWING ARE TO BE BROUGHT TO THE IMMEDIATE NOTICE OF THE SUPERVISION TEAM.

CHECKED	APPROVED	DATE	DRAWING NO.
			AR_05
		MARCH, 2026	SCALE
			NTS

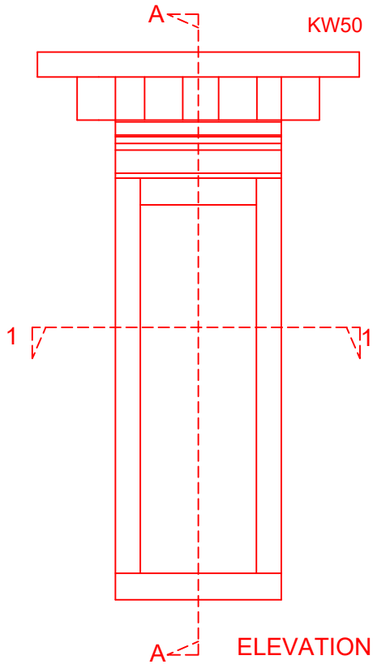

ELEVATION

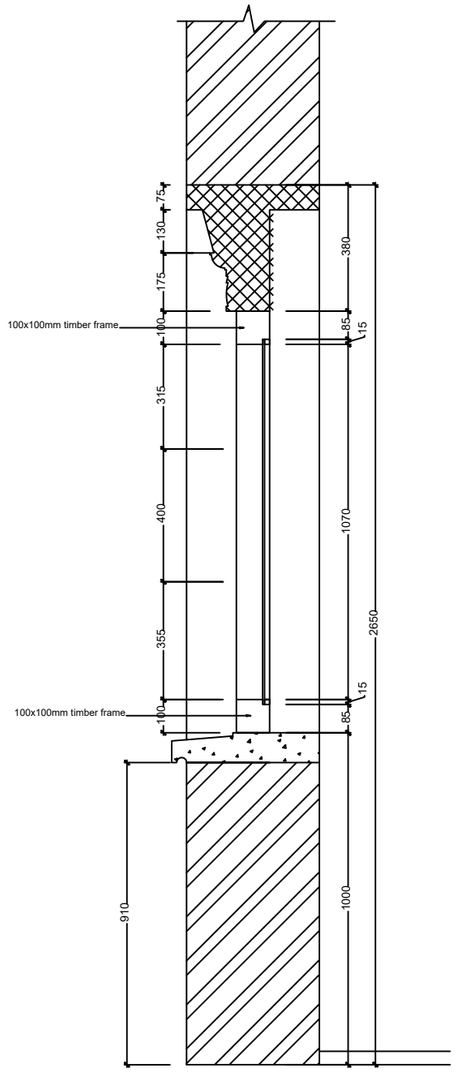

SECTION A-A

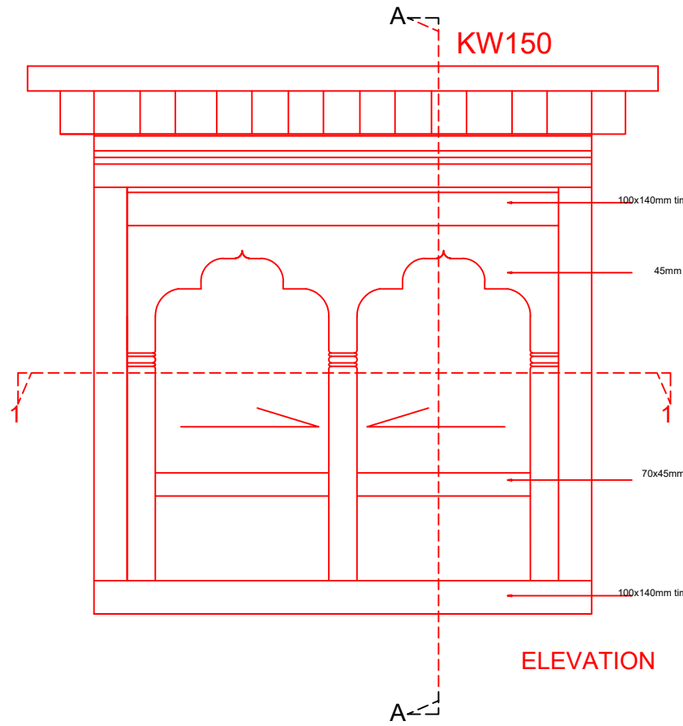

ELEVATION

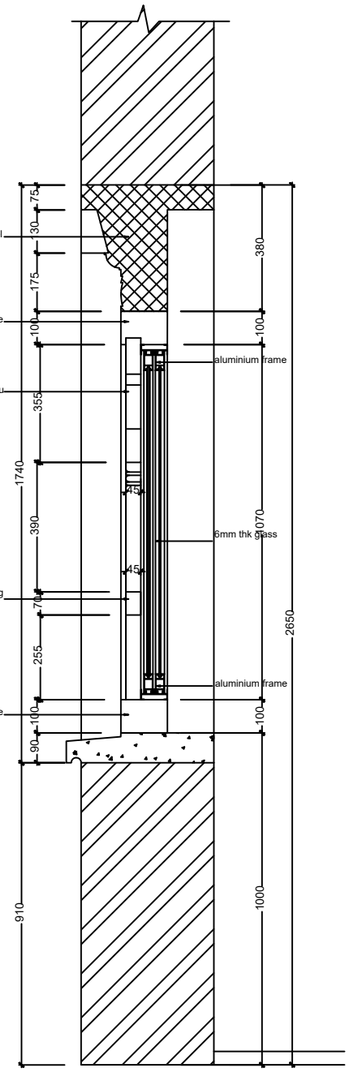

SECTION A-A

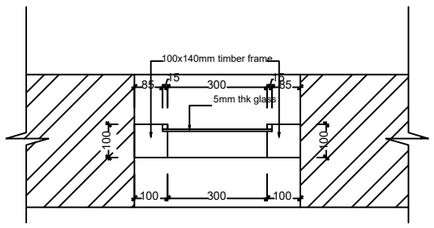

PLAN AT 1-1

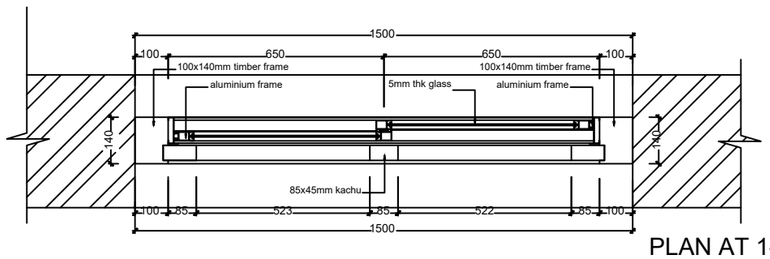

PLAN AT 1-1

Khorlochhu	**ARCHITECTURAL DRAWING**	**NOTES**	**CHECKED**	**APPROVED**	**DATE**	**DRAWING NO.**
	PROJECT TITLE	**DRAWING TITLE**				**AR_06**
	Construction of Doksum Primary School	**WINDOW_DETAILS**			MARCH, 2026	**SCALE**
						NTS

1. ALL DIMENSIONS ARE IN MILLIMETER & ELEVATION IN METER UNLESS SPECIFIED OTHERWISE.
2. ALL DIMENSIONS MEASURE UNFINISHED SURFACES UNLESS SPECIFIED OTHERWISE.
3. DIMENSIONS ARE TO BE READ AND NOT SCALED OFF.
4. ANY DISCREPANCIES IN THE DRAWING ARE TO BE BROUGHT TO THE IMMEDIATE NOTICE OF THE SUPERVISION TEAM.

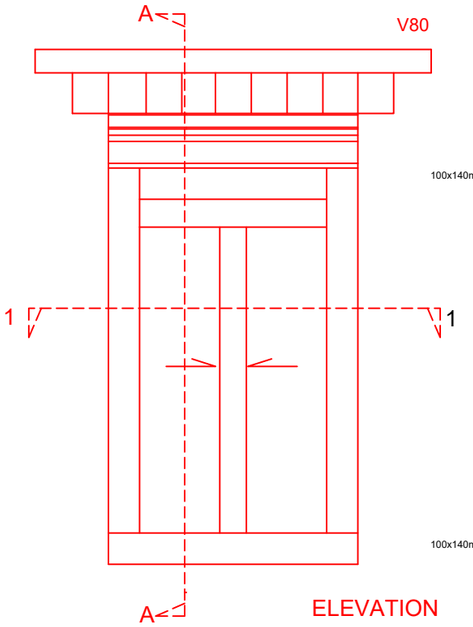

ELEVATION

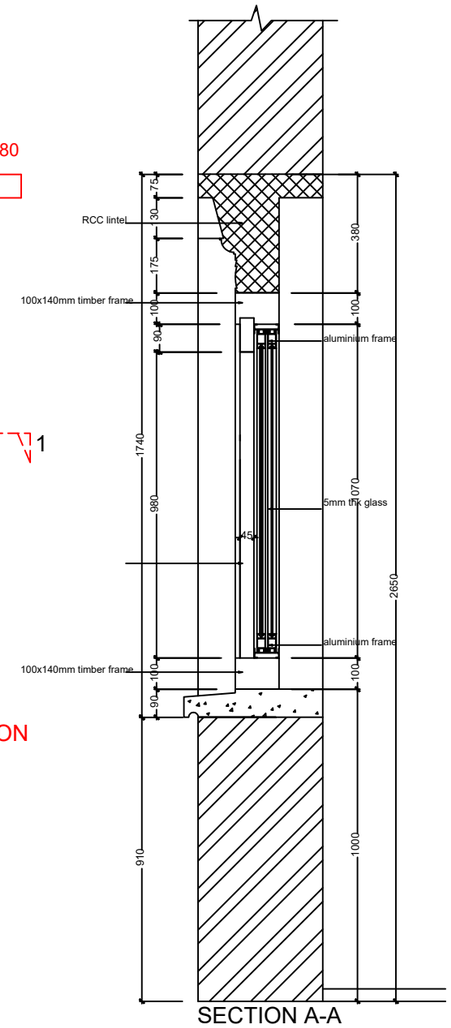

SECTION A-A

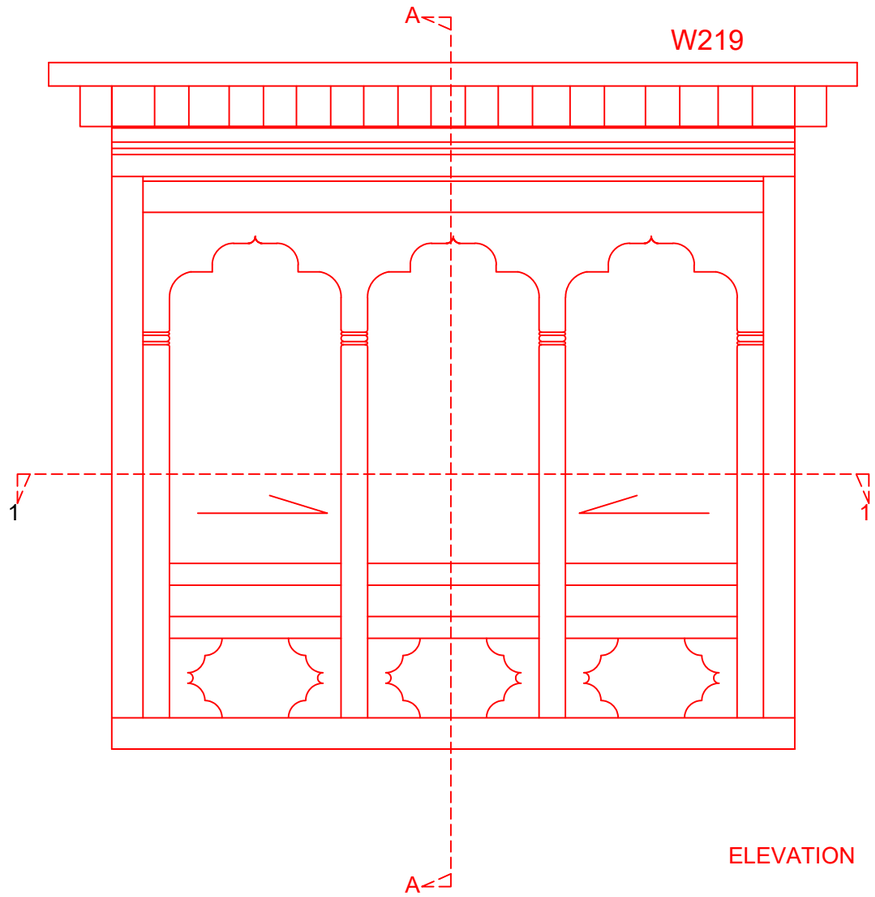

ELEVATION

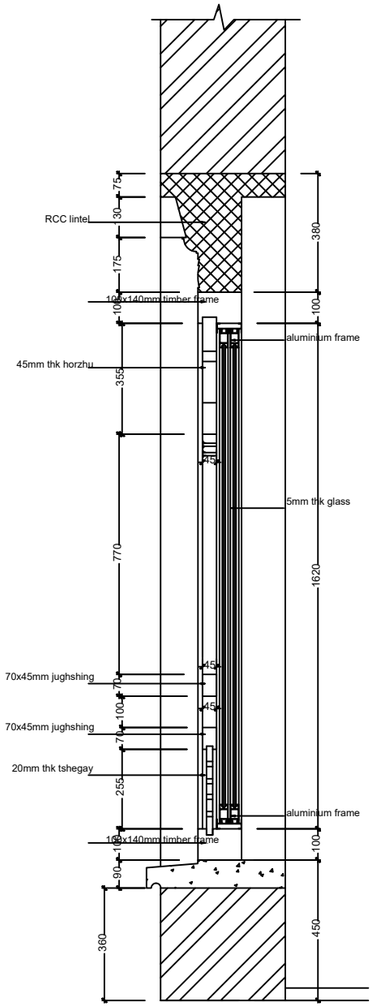

SECTION A-A

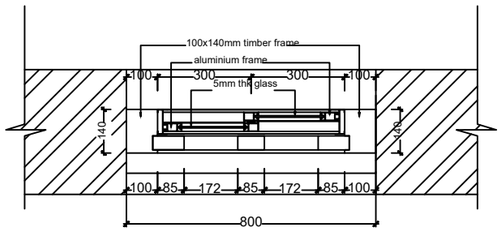

PLAN AT 1-1

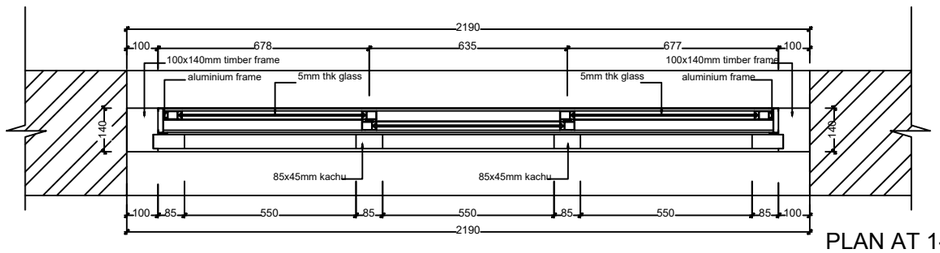

PLAN AT 1-1

Khorlochhu	**ARCHITECTURAL DRAWING**	**NOTES**	**CHECKED**	**APPROVED**	**DATE**	**DRAWING NO.**
	PROJECT TITLE / **DRAWING TITLE**	1. ALL DIMENSIONS ARE IN MILLIMETER & ELEVATION IN METER UNLESS SPECIFIED OTHERWISE. 2. ALL DIMENSIONS MEASURE UNFINISHED SURFACES UNLESS SPECIFIED OTHERWISE. 3. DIMENSIONS ARE TO BE READ AND NOT SCALED OFF. 4. ANY DISCREPANCIES IN THE DRAWING ARE TO BE BROUGHT TO THE IMMEDIATE NOTICE OF THE SUPERVISION TEAM.				**AR_07**
	Construction of Doksum Primary School / **WINDOW_DETAILS**				MARCH, 2026	**SCALE**
						NTS

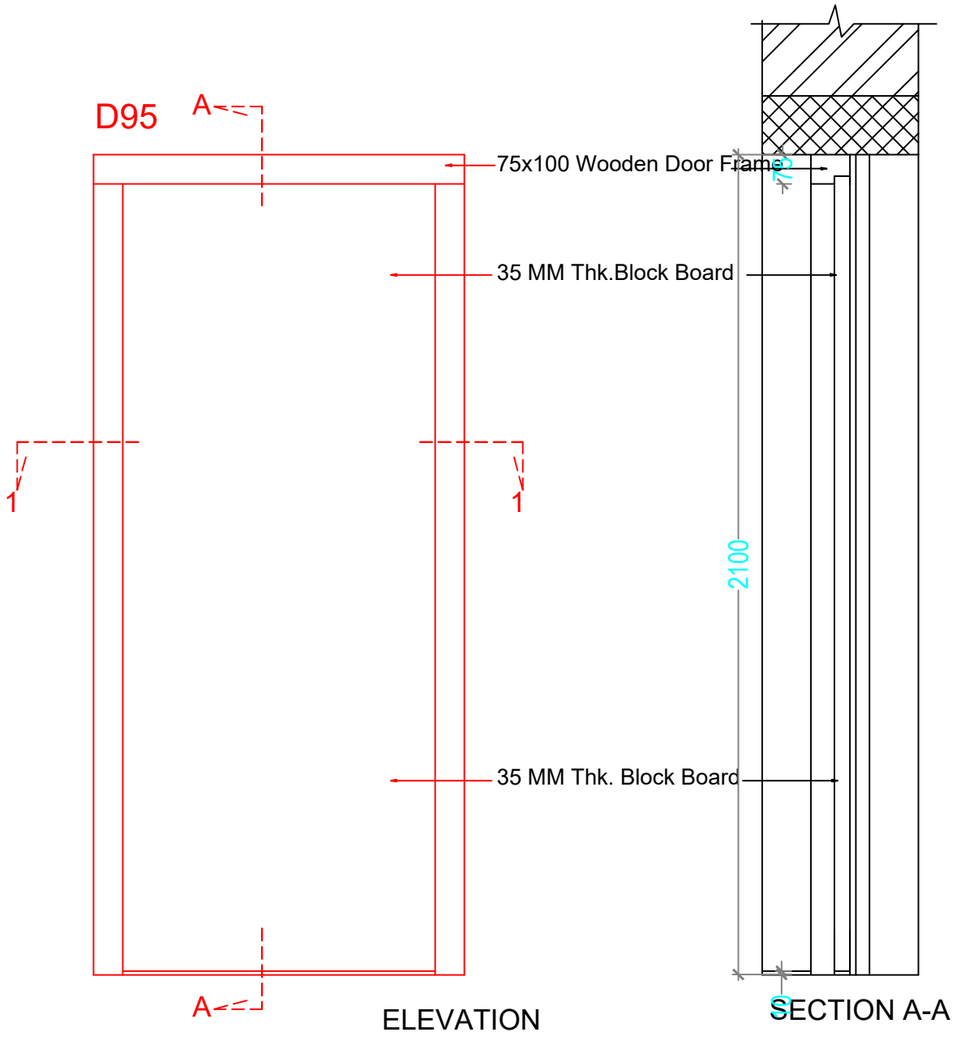

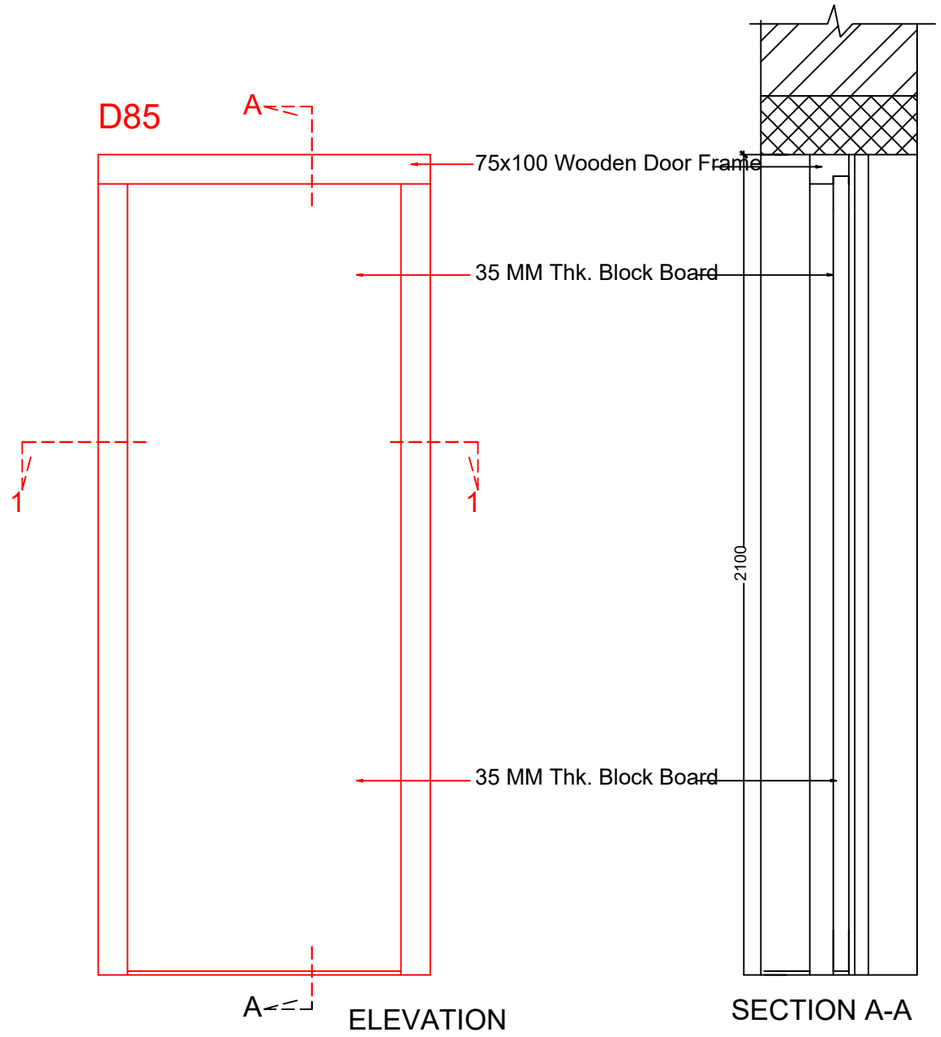

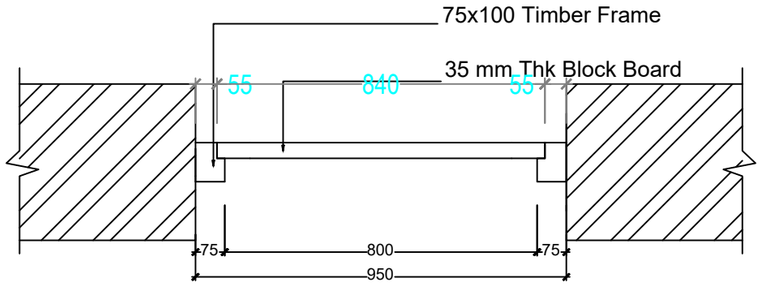

PLAN AT 1-1

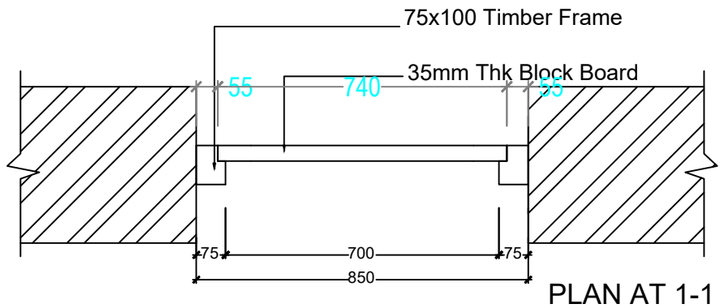

PLAN AT 1-1

Khorlochhu

ARCHITECTURAL DRAWING

PROJECT TITLE	DRAWING TITLE
Construction of Doksum Primary School	DOOR_DETAILS

NOTES

1. ALL DIMENSIONS ARE IN MILLIMETER & ELEVATION IN METER UNLESS SPECIFIED OTHERWISE.
2. ALL DIMENSIONS MEASURE UNFINISHED SURFACES UNLESS SPECIFIED OTHERWISE.
3. DIMENSIONS ARE TO BE READ AND NOT SCALED OFF.
4. ANY DISCREPANCIES IN THE DRAWING ARE TO BE BROUGHT TO THE IMMEDIATE NOTICE OF THE SUPERVISION TEAM.

CHECKED	APPROVED	DATE	DRAWING NO.
			AR_08
		MARCH, 2026	SCALE
			NTS

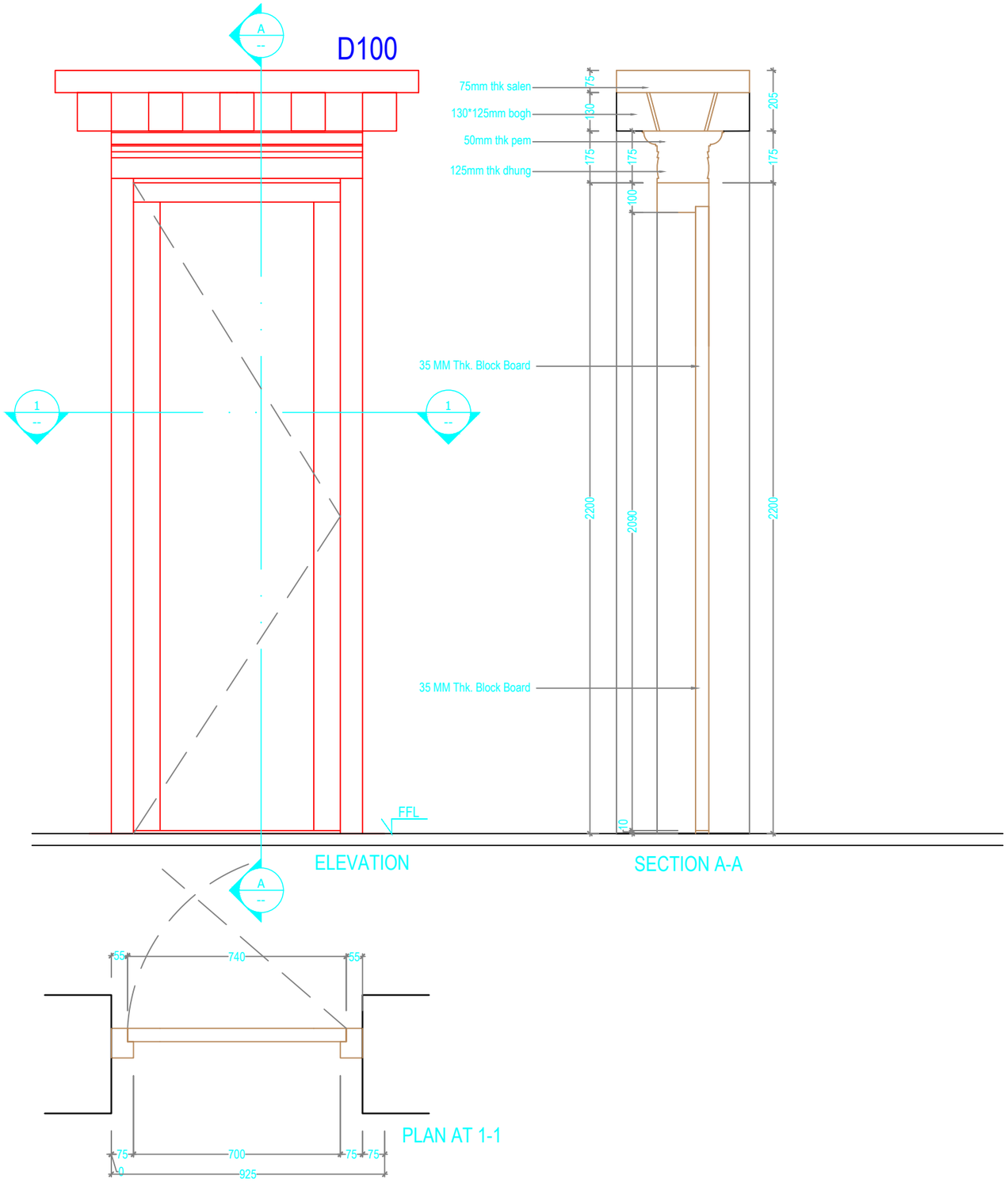

Khorlochhu

ARCHITECTURAL DRAWING

PROJECT TITLE	DRAWING TITLE
Construction of Doksum Primary School	DOOR_DETAILS

NOTES

1. ALL DIMENSIONS ARE IN MILLIMETER & ELEVATION IN METER UNLESS SPECIFIED OTHERWISE.
2. ALL DIMENSIONS MEASURE UNFINISHED SURFACES UNLESS SPECIFIED OTHERWISE.
3. DIMENSIONS ARE TO BE READ AND NOT SCALED OFF.
4. ANY DISCREPANCIES IN THE DRAWING ARE TO BE BROUGHT TO THE IMMEDIATE NOTICE OF THE SUPERVISION TEAM.

CHECKED	APPROVED	DATE	DRAWING NO.
			AR_09
		MARCH, 2026	SCALE
			NTS

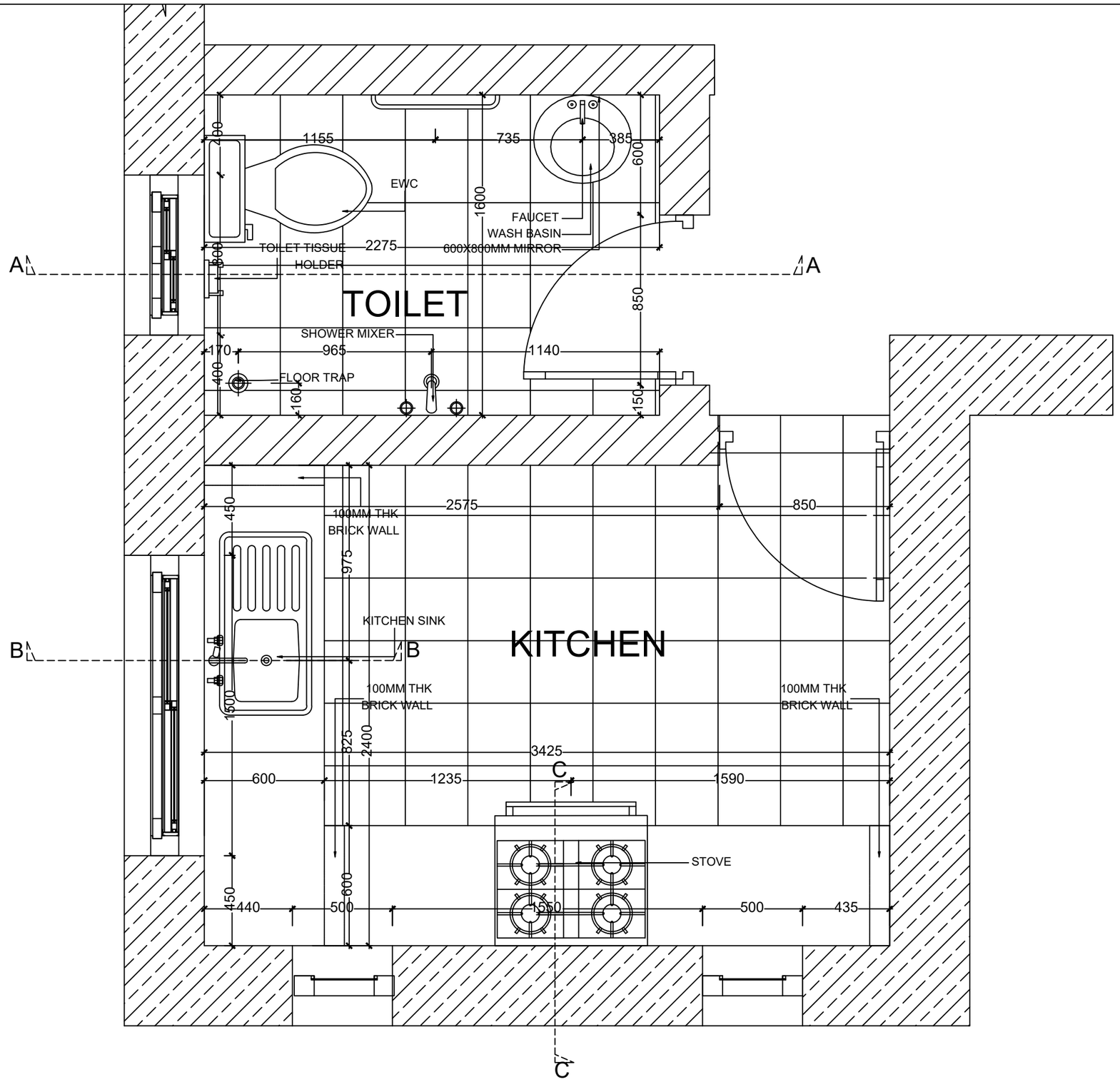

ARCHITECTURAL DRAWING

PROJECT TITLE	DRAWING TITLE
Construction of Doksum Primary School	KITCHEN_&_TOILET_DETAILS

NOTES

1. ALL DIMENSIONS ARE IN MILLIMETER & ELEVATION IN METER UNLESS SPECIFIED OTHERWISE.
2. ALL DIMENSIONS MEASURE UNFINISHED SURFACES UNLESS SPECIFIED OTHERWISE.
3. DIMENSIONS ARE TO BE READ AND NOT SCALED OFF.
4. ANY DISCREPANCIES IN THE DRAWING ARE TO BE BROUGHT TO THE IMMEDIATE NOTICE OF THE SUPERVISION TEAM.

CHECKED	APPROVED	DATE	DRAWING NO.
			AR_10
		MARCH, 2026	SCALE
			NTS

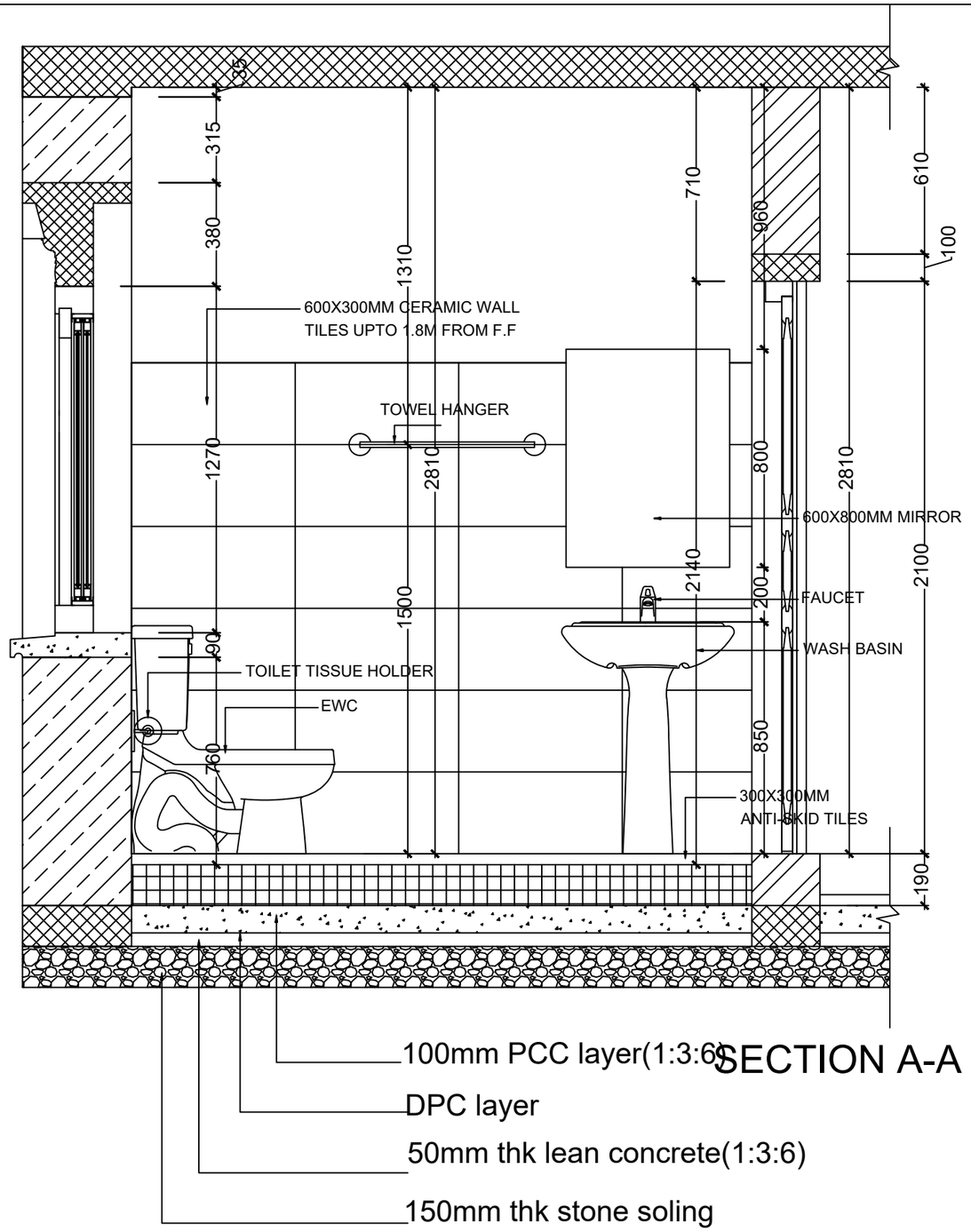

SECTION A-A

TOILET SECTIONAL DETAIL

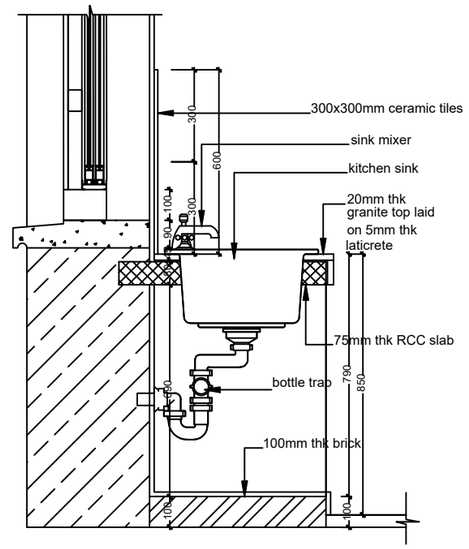

SECTION B-B

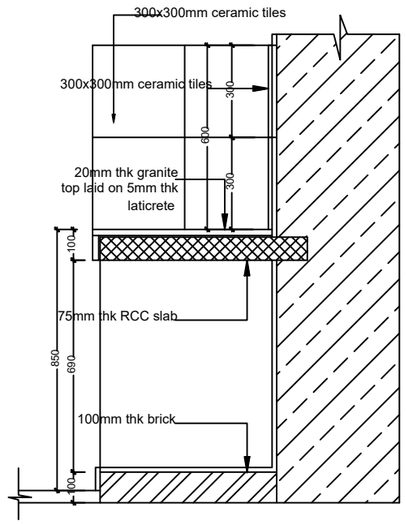

SECTION C-C

KITCHEN SECTIONAL DETAIL

Khorlochhu

ARCHITECTURAL DRAWING

PROJECT TITLE	DRAWING TITLE
Construction of Doksum Primary School	KITCHEN_&_TOILET_DETAILS

NOTES

1. ALL DIMENSIONS ARE IN MILLIMETER & ELEVATION IN METER UNLESS SPECIFIED OTHERWISE.
2. ALL DIMENSIONS MEASURE UNFINISHED SURFACES UNLESS SPECIFIED OTHERWISE.
3. DIMENSIONS ARE TO BE READ AND NOT SCALED OFF.
4. ANY DISCREPANCIES IN THE DRAWING ARE TO BE BROUGHT TO THE IMMEDIATE NOTICE OF THE SUPERVISION TEAM.

CHECKED	APPROVED	DATE	DRAWING NO.
			AR_11
		MARCH, 2026	SCALE
			NTS

PLUMBING DRAWINGS

CARETAKERS QUARTER

Owner - Khorlochhu Hydro Power Limited
Location - Doksum New Township, Trashiyangtse

Khorlochhu

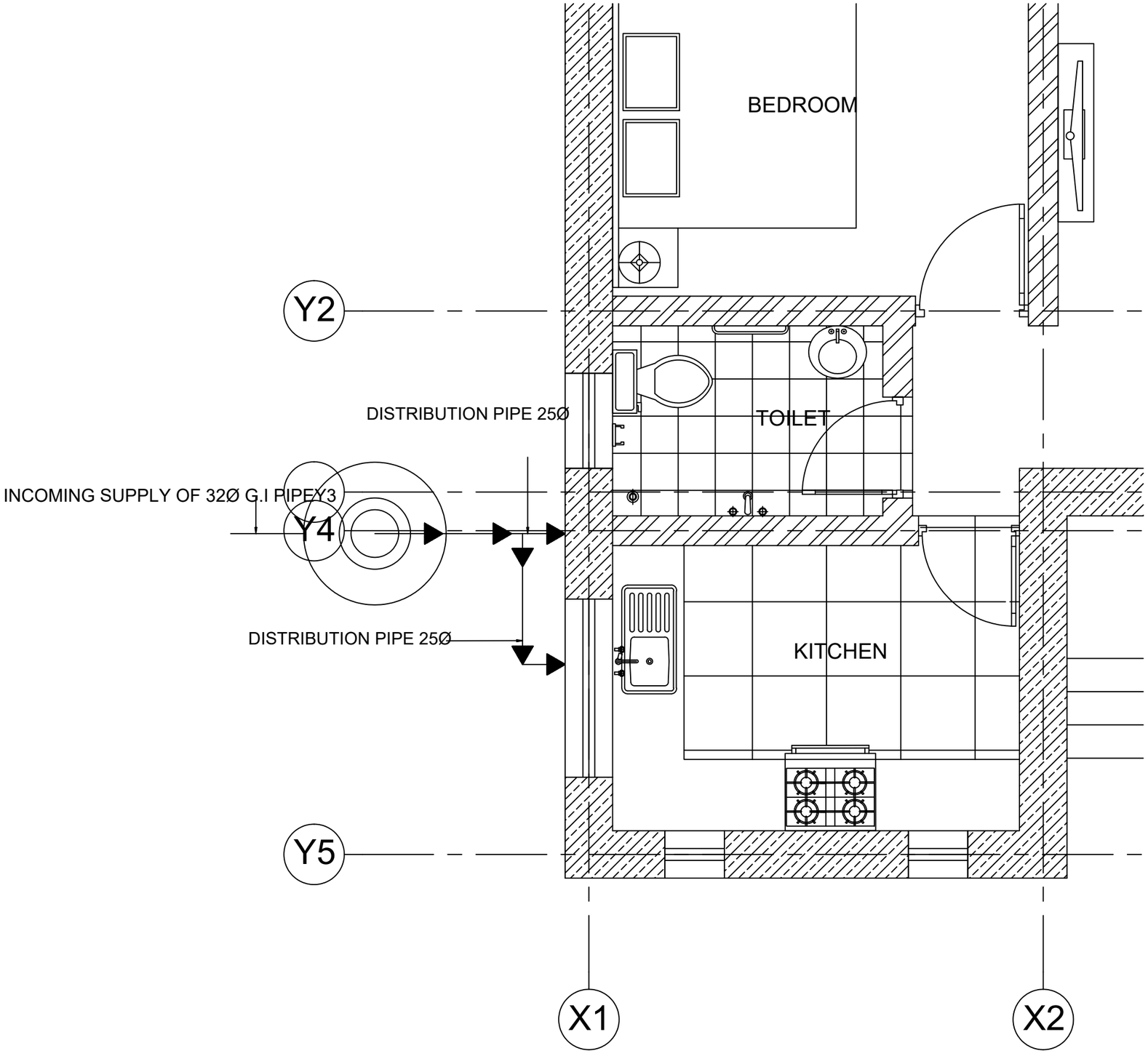

Khorlochhu

ARCHITECTURAL DRAWING

PROJECT TITLE	DRAWING TITLE
Construction of Doksum Primary School	WATER_DISTRIBUTION_LAYOUT

NOTES

1. ALL DIMENSIONS ARE IN MILLIMETER & ELEVATION IN METER UNLESS SPECIFIED OTHERWISE.
2. ALL DIMENSIONS MEASURE UNFINISHED SURFACES UNLESS SPECIFIED OTHERWISE.
3. DIMENSIONS ARE TO BE READ AND NOT SCALED OFF.
4. ANY DISCREPANCIES IN THE DRAWING ARE TO BE BROUGHT TO THE IMMEDIATE NOTICE OF THE SUPERVISION TEAM.

CHECKED	APPROVED	DATE	DRAWING NO.
			PB_01
		MARCH, 2026	SCALE
			NTS

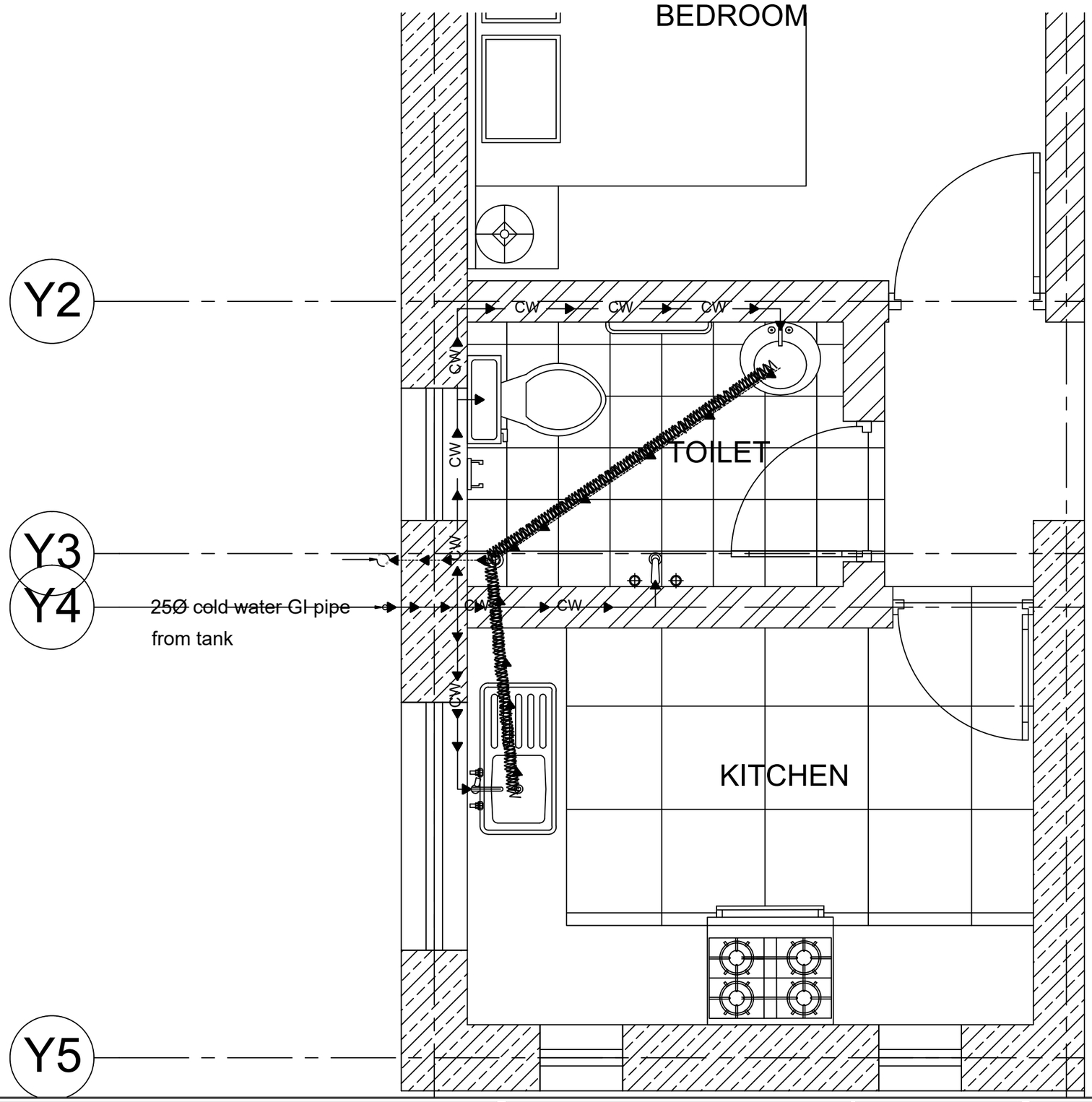

Khorlochhu

ARCHITECTURAL DRAWING

PROJECT TITLE	DRAWING TITLE
Construction of Doksum Primary School	WATER_SUPPLY_WASTE_WATER_&_SEWERAGE_LAYOUT

NOTES

1. ALL DIMENSIONS ARE IN MILLIMETER & ELEVATION IN METER UNLESS SPECIFIED OTHERWISE.
2. ALL DIMENSIONS MEASURE UNFINISHED SURFACES UNLESS SPECIFIED OTHERWISE.
3. DIMENSIONS ARE TO BE READ AND NOT SCALED OFF.
4. ANY DISCREPANCIES IN THE DRAWING ARE TO BE BROUGHT TO THE IMMEDIATE NOTICE OF THE SUPERVISION TEAM.

CHECKED	APPROVED	DATE	DRAWING NO.
			PB_02
		MARCH, 2026	SCALE
			NTS

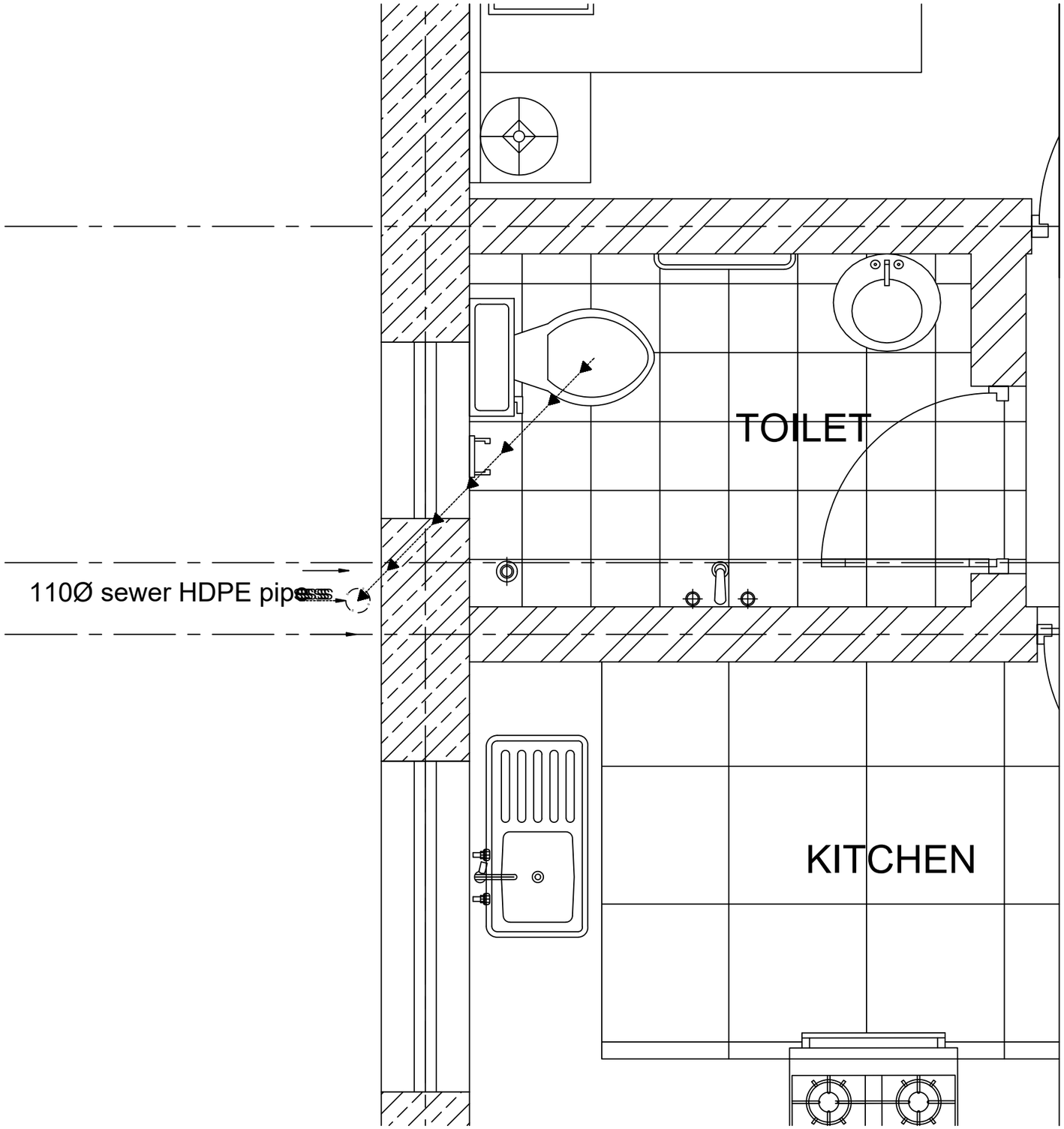

Khorlochhu

ARCHITECTURAL DRAWING

PROJECT TITLE	DRAWING TITLE
Construction of Doksum Primary School	WATER_SUPPLY_WASTE_WATER_&_SEWERAGE_LAYOUT

NOTES

1. ALL DIMENSIONS ARE IN MILLIMETER & ELEVATION IN METER UNLESS SPECIFIED OTHERWISE.
2. ALL DIMENSIONS MEASURE UNFINISHED SURFACES UNLESS SPECIFIED OTHERWISE.
3. DIMENSIONS ARE TO BE READ AND NOT SCALED OFF.
4. ANY DISCREPANCIES IN THE DRAWING ARE TO BE BROUGHT TO THE IMMEDIATE NOTICE OF THE SUPERVISION TEAM.

CHECKED	APPROVED	DATE	DRAWING NO.
			PB_03
		MARCH, 2026	SCALE
			NTS

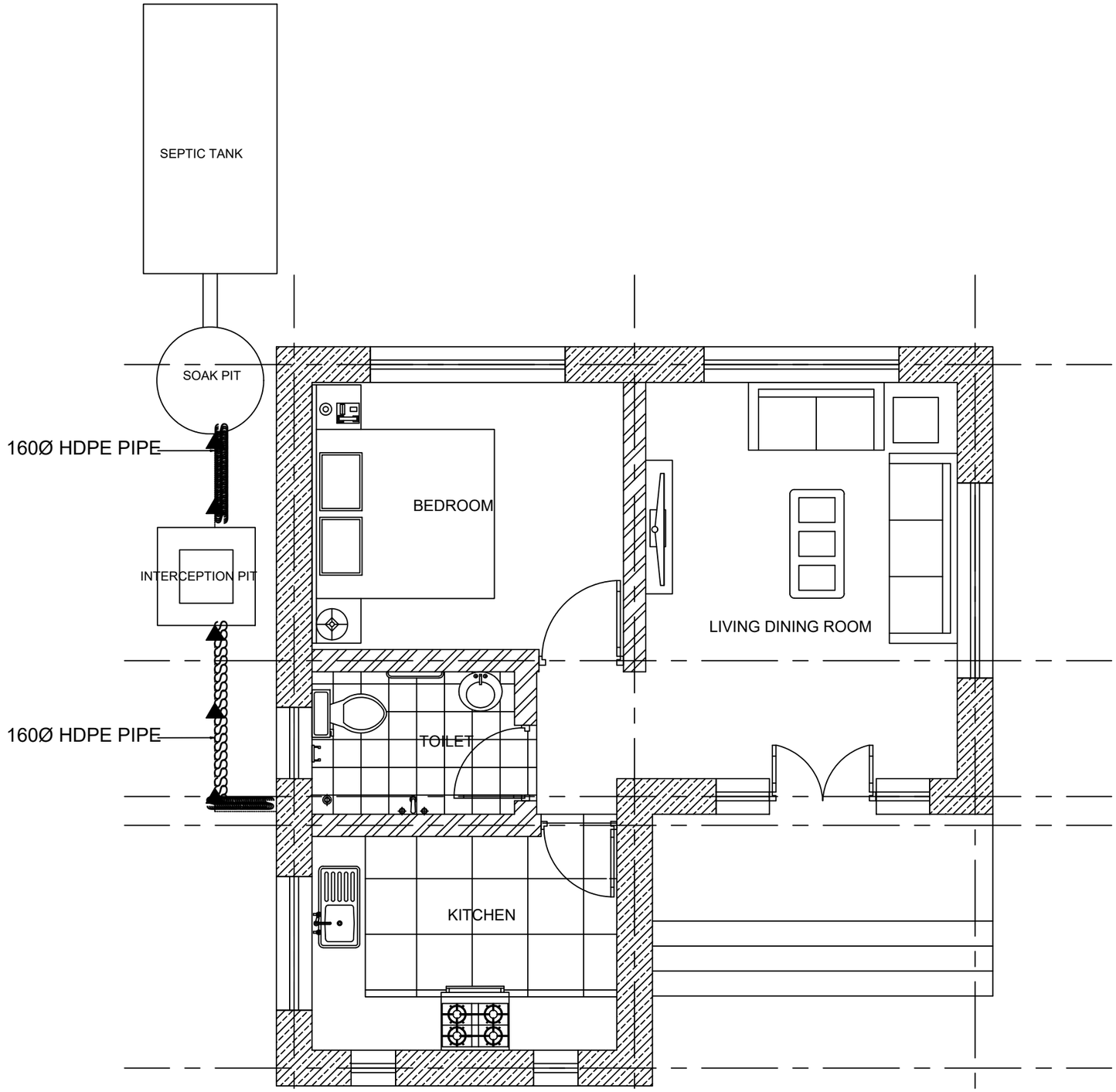

Khorlochhu

ARCHITECTURAL DRAWING

PROJECT TITLE	DRAWING TITLE
Construction of Doksum Primary School	SOAK_PIT_&_INTERCEPTION_PIT__LAYOUT

NOTES

1. ALL DIMENSIONS ARE IN MILLIMETER & ELEVATION IN METER UNLESS SPECIFIED OTHERWISE.
2. ALL DIMENSIONS MEASURE UNFINISHED SURFACES UNLESS SPECIFIED OTHERWISE.
3. DIMENSIONS ARE TO BE READ AND NOT SCALED OFF.
4. ANY DISCREPANCIES IN THE DRAWING ARE TO BE BROUGHT TO THE IMMEDIATE NOTICE OF THE SUPERVISION TEAM.

CHECKED	APPROVED	DATE	DRAWING NO.
			PB_04
		MARCH, 2026	SCALE
			NTS

STRUCTURAL DRAWINGS

CARETAKER'S QUARTER

Owner - Khorlochhu Hydro Power Limited
Location - Doksum New Township, Trashiyangtse

Khorlochhu

GENERAL STRUCTURAL DESIGN NOTES

1. All dimension in mm unless otherwise mentioned
2. Structural drawing shall be read in conjunction with the Architectural drawing
3. Code of practice referred
   - IS 456-2000, code of practice for plain and RCC
   - IS 13920-1993, Ductile detailing for RCC
   - IS 4326-1993, Earthquake resistant design and construction of Building - Code of practice
4. Parameters assumed during the design
   - Bearing capacity of soil 150KN/Sq.m
   - Grade of concrete - M20
   - Grade of steel - Fe 415 TMT stell
   - Density of RCC - 25KN/Sq.m
   - Densisty Concrete brick - 16.79KN/Sq.m
   - Density of Stone Boulder - 23KN/Sq.m
   - Live Load on floor - 2KN/Sq.m
   - Live Load on roof- .75KN/Sq.m
5. Check all dimensions before commencing work
6. Additional information given on the drawing in the form of notes shall always be referred
7. Refer any discrepency to the engineer before proceeding with the work
8. No duct/conduit shall pass through Bands
9. One story load bearing structure with Brick in wall and Brick in partitions, Timber trusses, CGI roofing

Khorlochhu	STRUCTURAL DRAWING		NOTES	CHECKED	APPROVED	DATE	DRAWING NO.
	PROJECT TITLE	DRAWING TITLE	1. ALL DIMENSIONS ARE IN MILLIMETER & ELEVATION IN METER UNLESS SPECIFIED OTHERWISE. 2. ALL DIMENSIONS MEASURE UNFINISHED SURFACES UNLESS SPECIFIED OTHERWISE. 3. DIMENSIONS ARE TO BE READ AND NOT SCALED OFF. 4. ANY DISCREPANCIES IN THE DRAWING ARE TO BE BROUGHT TO THE IMMEDIATE NOTICE OF THE SUPERVISION TEAM.				STR_1
	Construction of Doksum Primary School	STRUCTURE_NOTES				MARCH, 2026	SCALE NTS

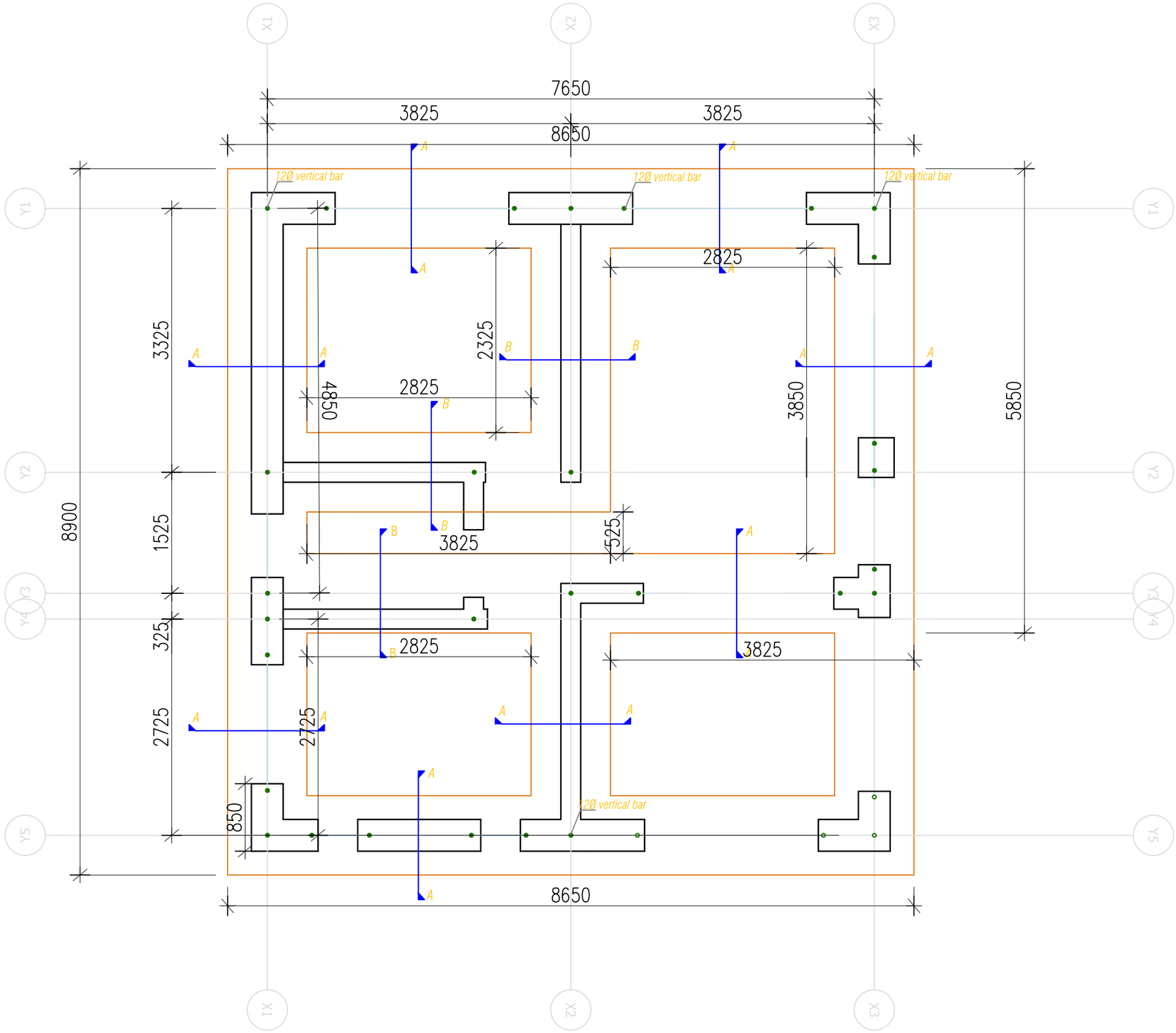

Khorlochhu

STRUCTURAL DRAWING

PROJECT TITLE	DRAWING TITLE
Construction of Doksum Primary School	FOUNDATION_LAYOUT

NOTES

1. ALL DIMENSIONS ARE IN MILLIMETER & ELEVATION IN METER UNLESS SPECIFIED OTHERWISE.
2. ALL DIMENSIONS MEASURE UNFINISHED SURFACES UNLESS SPECIFIED OTHERWISE.
3. DIMENSIONS ARE TO BE READ AND NOT SCALED OFF.
4. ANY DISCREPANCIES IN THE DRAWING ARE TO BE BROUGHT TO THE IMMEDIATE NOTICE OF THE SUPERVISION TEAM.

CHECKED	APPROVED	DATE	DRAWING NO.
			STR_02
		MARCH, 2026	SCALE
			NTS

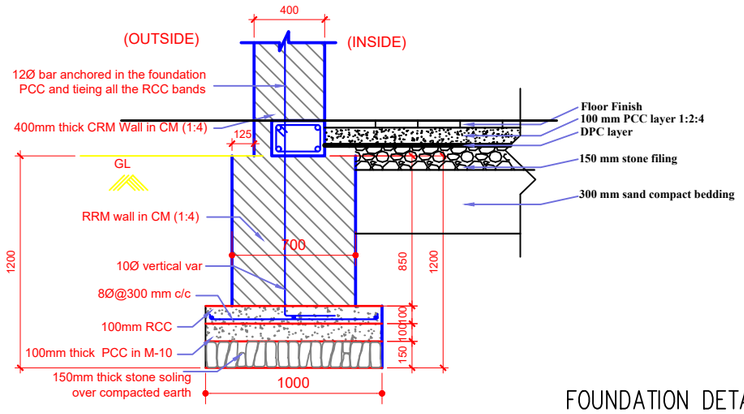

SECTION A-A

FOUNDATION DETAILS

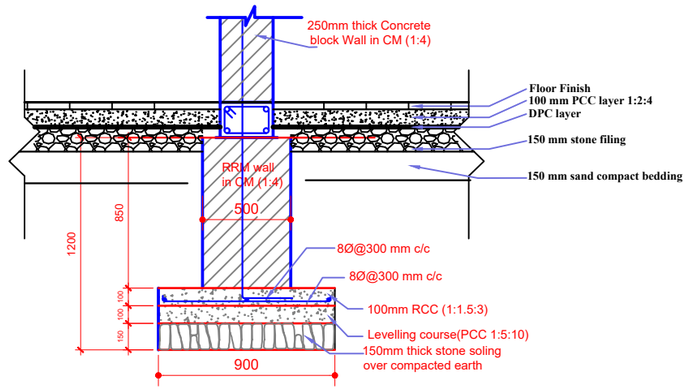

SECTION B-B

Notes:
1. For vertical bar placement see ST-03
2. Minimum soil bearing pressure at base of foundations to 120 KN/m2 Engineer to be consulted if abnormal soil conditions exist.
3. Soil at base of foundations to be well compacted

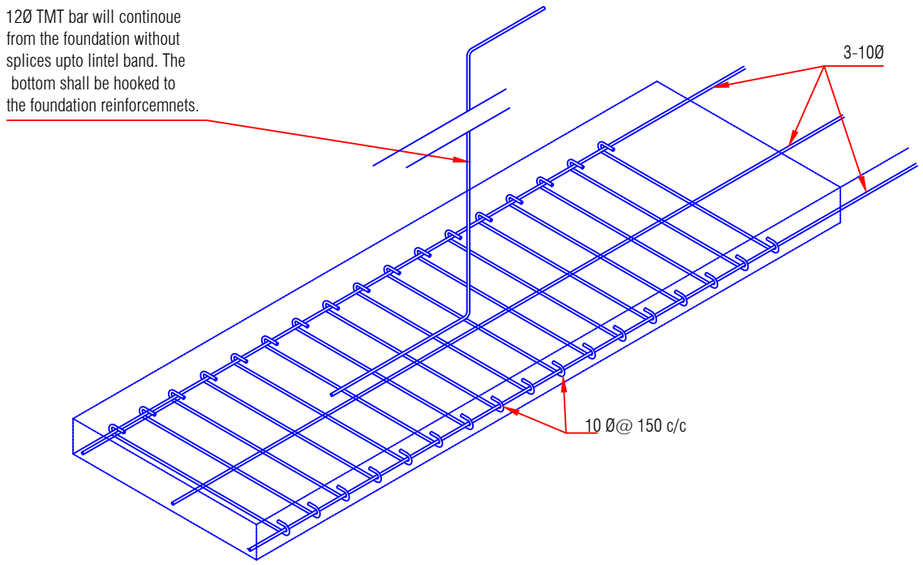

Reinforcement Details at foundation and Vertical Bar

Khorlochhu

STRUCTURAL DRAWING

PROJECT TITLE	DRAWING TITLE
Construction of Doksum Primary School	FOUNDATION_DETAILS

NOTES

1. ALL DIMENSIONS ARE IN MILLIMETER & ELEVATION IN METER UNLESS SPECIFIED OTHERWISE.
2. ALL DIMENSIONS MEASURE UNFINISHED SURFACES UNLESS SPECIFIED OTHERWISE.
3. DIMENSIONS ARE TO BE READ AND NOT SCALED OFF.
4. ANY DISCREPANCIES IN THE DRAWING ARE TO BE BROUGHT TO THE IMMEDIATE NOTICE OF THE SUPERVISION TEAM.

CHECKED	APPROVED	DATE	DRAWING NO.
		MARCH, 2026	STR_03
			SCALE
			NTS

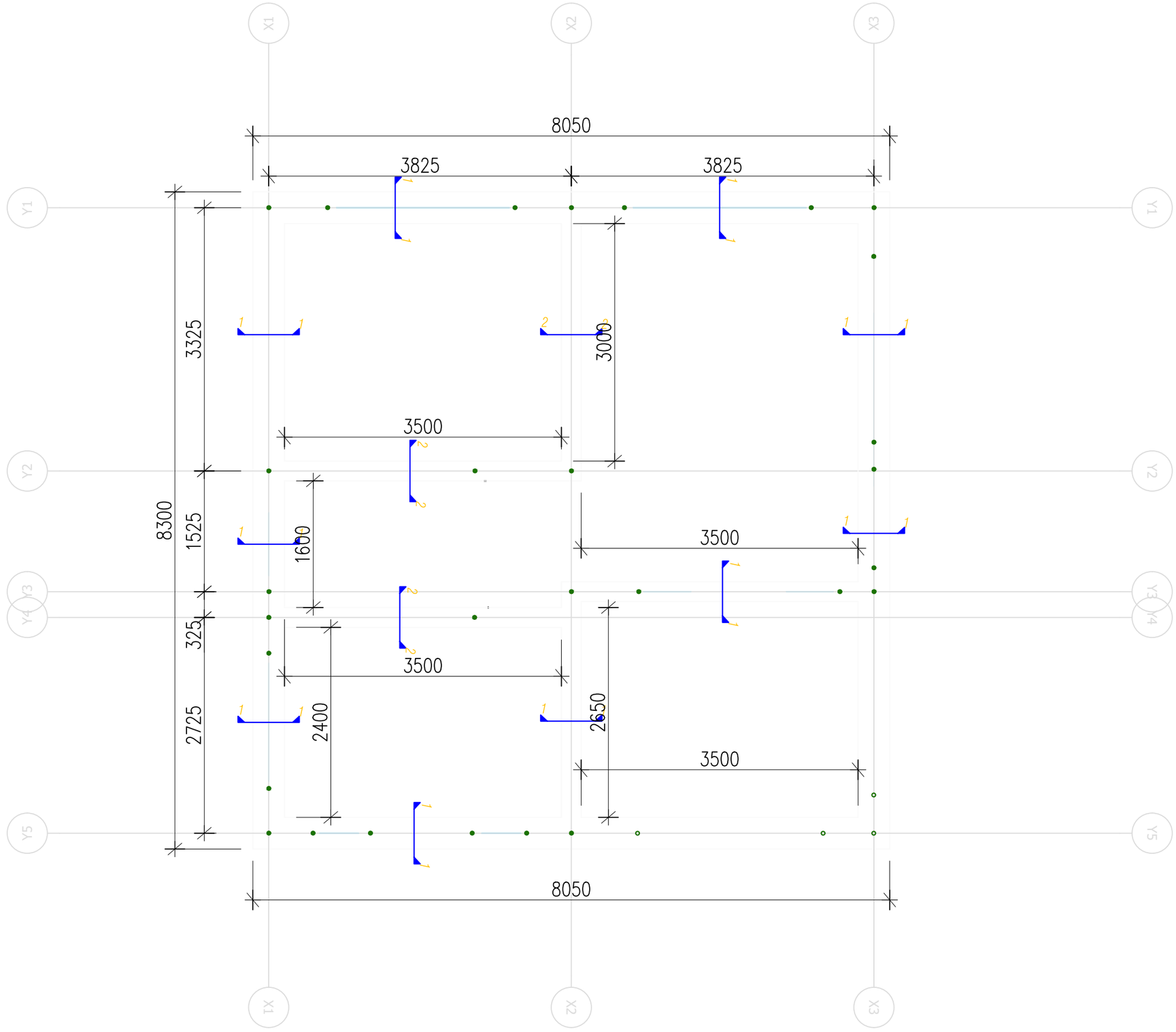

STRUCTURAL DRAWING

PROJECT TITLE	DRAWING TITLE
Construction of Doksum Primary School	PLINTH_&_ROOF_BAND_LAYOUT_PLAN

NOTES

1. ALL DIMENSIONS ARE IN MILLIMETER & ELEVATION IN METER UNLESS SPECIFIED OTHERWISE.
2. ALL DIMENSIONS MEASURE UNFINISHED SURFACES UNLESS SPECIFIED OTHERWISE.
3. DIMENSIONS ARE TO BE READ AND NOT SCALED OFF.
4. ANY DISCREPANCIES IN THE DRAWING ARE TO BE BROUGHT TO THE IMMEDIATE NOTICE OF THE SUPERVISION TEAM.

CHECKED	APPROVED	DATE	DRAWING NO.
			STR_04
		MARCH, 2026	SCALE
			NTS

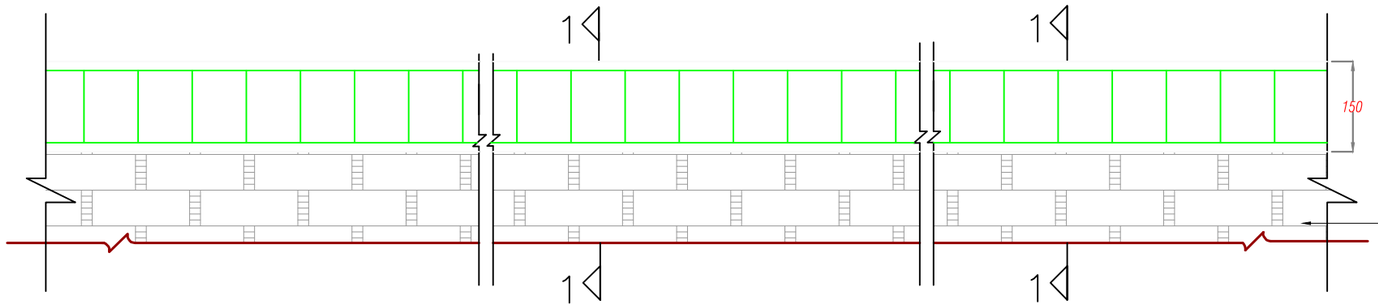

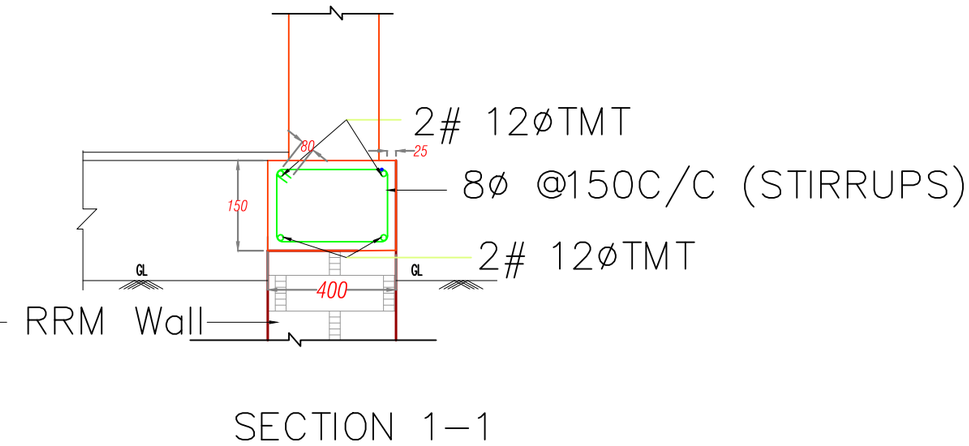

SECTION 1-1 OF PLINTH & ROOF BAND

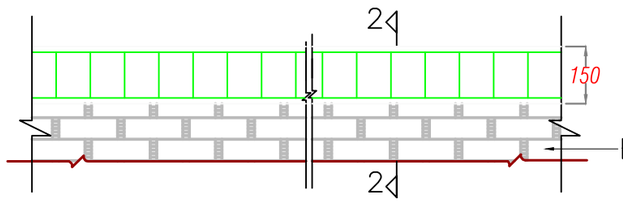

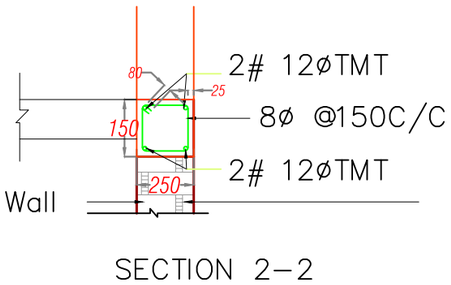

SECTION 2-2 OF PLINTH & ROOF BAND(250mm thick wall)

Khorlochhu

STRUCTURAL DRAWING

PROJECT TITLE	DRAWING TITLE
Construction of Doksum Primary School	AS_STATED_IN_DRAWING

NOTES

1. ALL DIMENSIONS ARE IN MILLIMETER & ELEVATION IN METER UNLESS SPECIFIED OTHERWISE.
2. ALL DIMENSIONS MEASURE UNFINISHED SURFACES UNLESS SPECIFIED OTHERWISE.
3. DIMENSIONS ARE TO BE READ AND NOT SCALED OFF.
4. ANY DISCREPANCIES IN THE DRAWING ARE TO BE BROUGHT TO THE IMMEDIATE NOTICE OF THE SUPERVISION TEAM.

CHECKED	APPROVED	DATE	DRAWING NO.
			STR_05
		MARCH, 2026	SCALE
			NTS

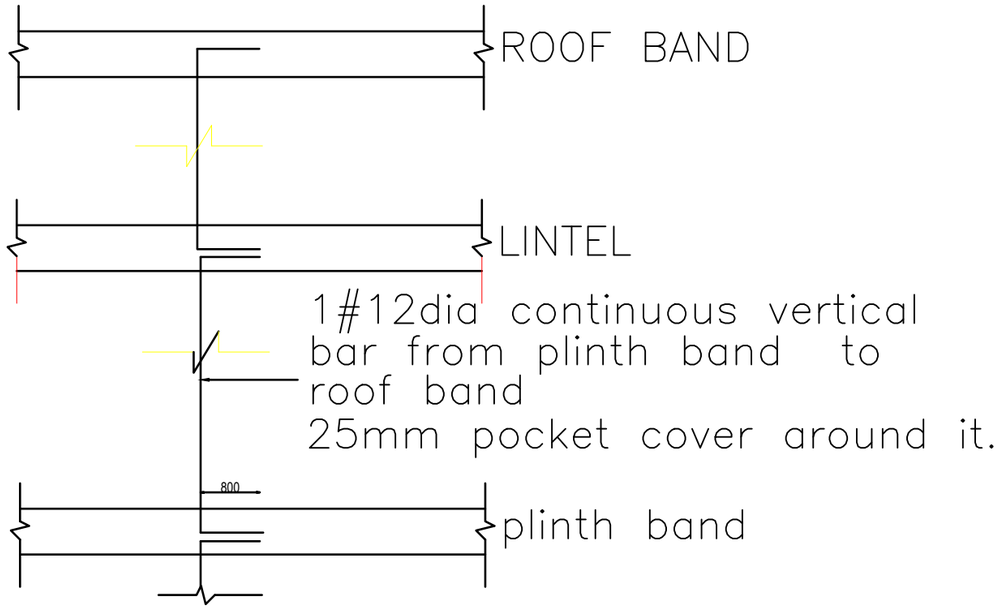

VERTICAL REBARS FIXING DETAILS

NOTES:

1. Vertical reinforcing bar starting from foundation at corners, junctions of walls and jambs of openings are shown in this drawing.
2. 12ø vertical reinforcing bars are to be used at corners and junctions.
3. 12ø vertical reinforcing bars are to be used at jambs of openings.
4. Lintel shall be provided above all windows and doors.
5. Maximum distance between vertical bars shall be 1500mm.
6. Lintel beam shall be extend at least 200mm beyond the edge of opening into the masonry wall.
7. Overlapping splice shall be of length 600mm in case of splice requirement and bars shall be properly tied using binding wire.
8. Lintel shall be provided over the windows and door
9. Cover to reinforcement shall be at least 25mm.
10. W= WIDTH OF THE MASONRY WALL.

Khorlochhu	STRUCTURAL DRAWING		NOTES	CHECKED	APPROVED	DATE	DRAWING NO.
	PROJECT TITLE	DRAWING TITLE	1. ALL DIMENSIONS ARE IN MILLIMETER & ELEVATION IN METER UNLESS SPECIFIED OTHERWISE. 2. ALL DIMENSIONS MEASURE UNFINISHED SURFACES UNLESS SPECIFIED OTHERWISE. 3. DIMENSIONS ARE TO BE READ AND NOT SCALED OFF. 4. ANY DISCREPANCIES IN THE DRAWING ARE TO BE BROUGHT TO THE IMMEDIATE NOTICE OF THE SUPERVISION TEAM.				STR_06
	Construction of Doksum Primary School	AS_STATED_IN_DRAWING				MARCH, 2026	SCALE NTS

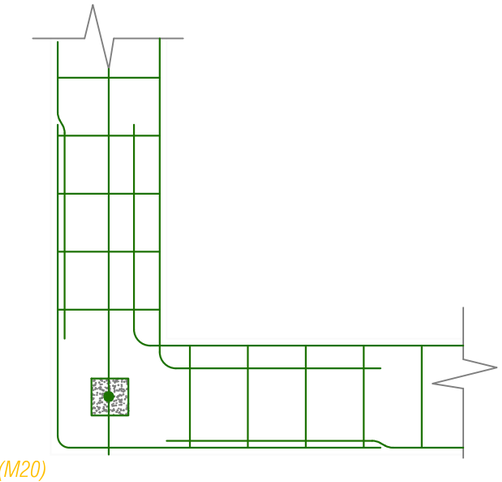

Reinforcement detailing at L-junction

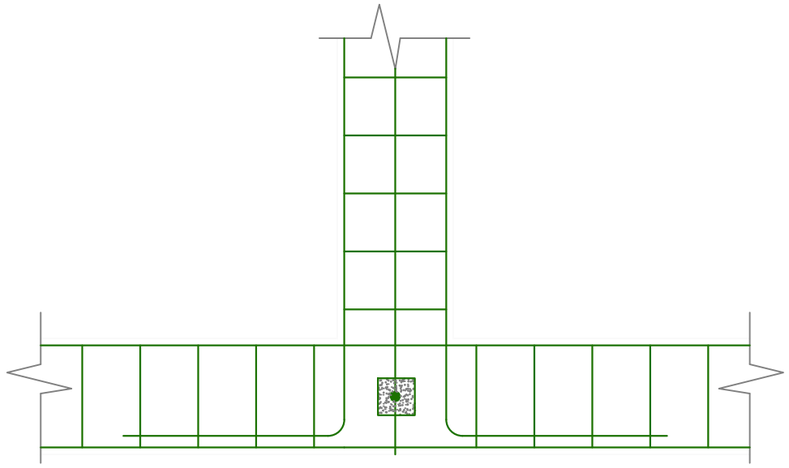

Reinforcement detailing at T-junction

note: concrete enclosing bars should be
well compacted to ensure bondage

Vertical reinforcement of 12Ø single bar at jambs
of windows and door opening shall be provided

VERTICAL REINFORCEMENT DETAIL

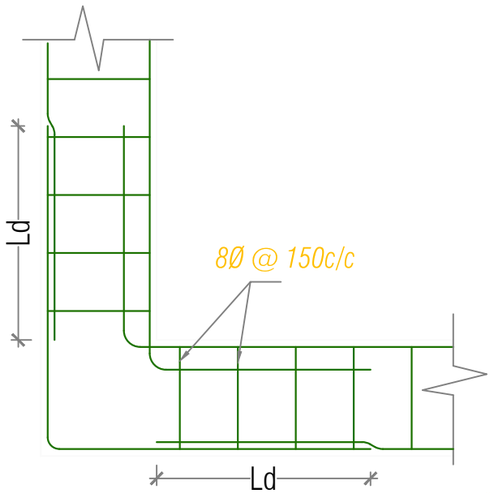

Reinforcement detailing at L-junction

note: concrete enclosing bars should be
well compacted to ensure bondage

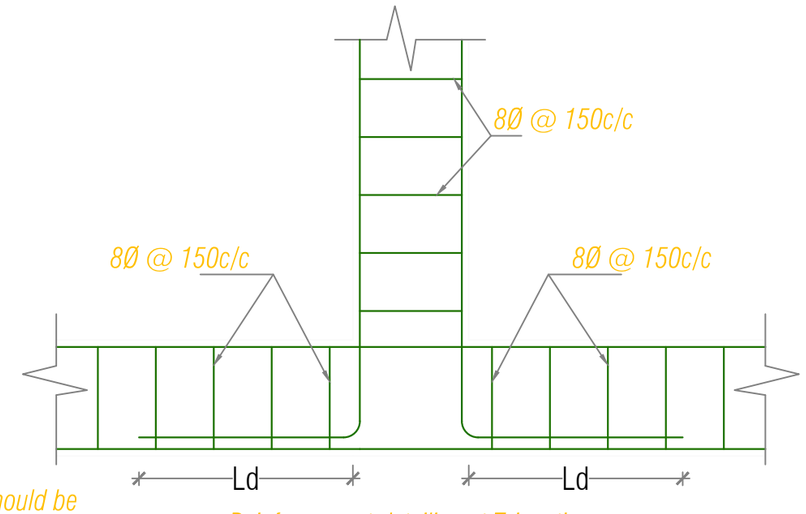

Reinforcement detailing at T-junction

HORIZONTAL REINFORCEMENT DETAIL

Khorlochhu

STRUCTURAL DRAWING

PROJECT TITLE	DRAWING TITLE
Construction of Doksum Primary School	AS_STATED_IN_DRAWING

NOTES

1. ALL DIMENSIONS ARE IN MILLIMETER & ELEVATION IN METER UNLESS SPECIFIED OTHERWISE.
2. ALL DIMENSIONS MEASURE UNFINISHED SURFACES UNLESS SPECIFIED OTHERWISE.
3. DIMENSIONS ARE TO BE READ AND NOT SCALED OFF.
4. ANY DISCREPANCIES IN THE DRAWING ARE TO BE BROUGHT TO THE IMMEDIATE NOTICE OF THE SUPERVISION TEAM.

CHECKED	APPROVED	DATE	DRAWING NO.
			STR_07
		MARCH, 2026	SCALE
			NTS

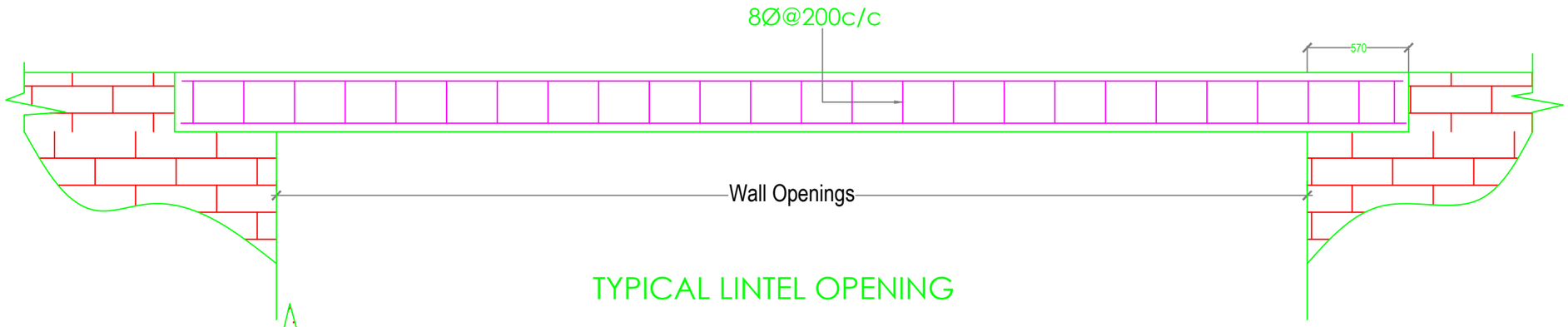

TYPICAL LINTEL OPENING

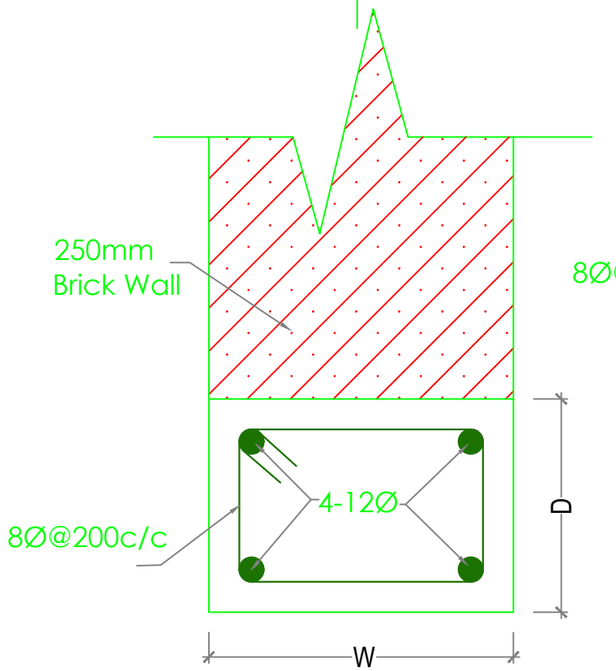

OPENING WITHIN EXTERNAL WALL

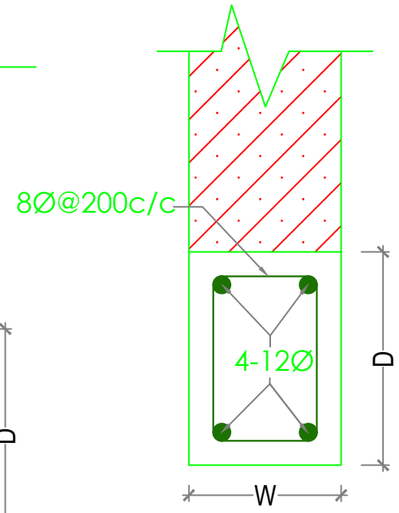

OPENING WITHIN INTERNAL WALL

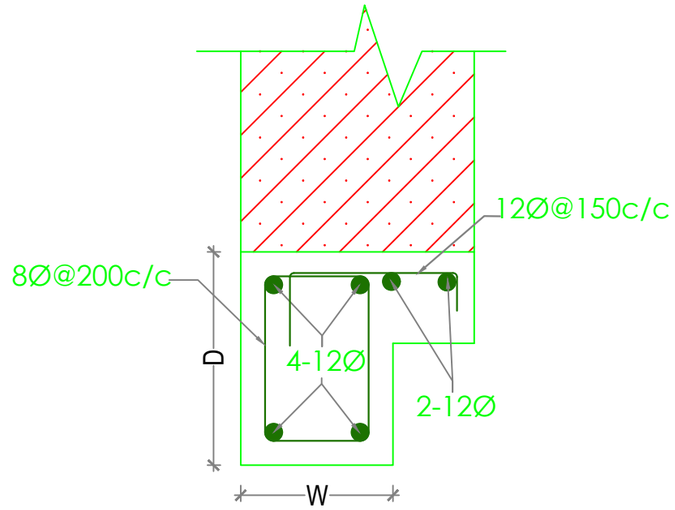

LINTEL WITH CORNICE

NOTE :

1. Depth (D) of Lintels is to be taken as shown in Architectural drawings, especially for main windows and should be taken as 150mm for all other Lintels.
2. Width (W) of Lintels is to be taken equal to the wall thickness.

Khorlochhu

STRUCTURAL DRAWING

PROJECT TITLE	DRAWING TITLE
Construction of Doksum Primary School	AS_STATED_IN_DRAWING

NOTES

1. ALL DIMENSIONS ARE IN MILLIMETER & ELEVATION IN METER UNLESS SPECIFIED OTHERWISE.
2. ALL DIMENSIONS MEASURE UNFINISHED SURFACES UNLESS SPECIFIED OTHERWISE.
3. DIMENSIONS ARE TO BE READ AND NOT SCALED OFF.
4. ANY DISCREPANCIES IN THE DRAWING ARE TO BE BROUGHT TO THE IMMEDIATE NOTICE OF THE SUPERVISION TEAM.

CHECKED	APPROVED	DATE	DRAWING NO.
			STR_08
		MARCH, 2026	SCALE
			NTS

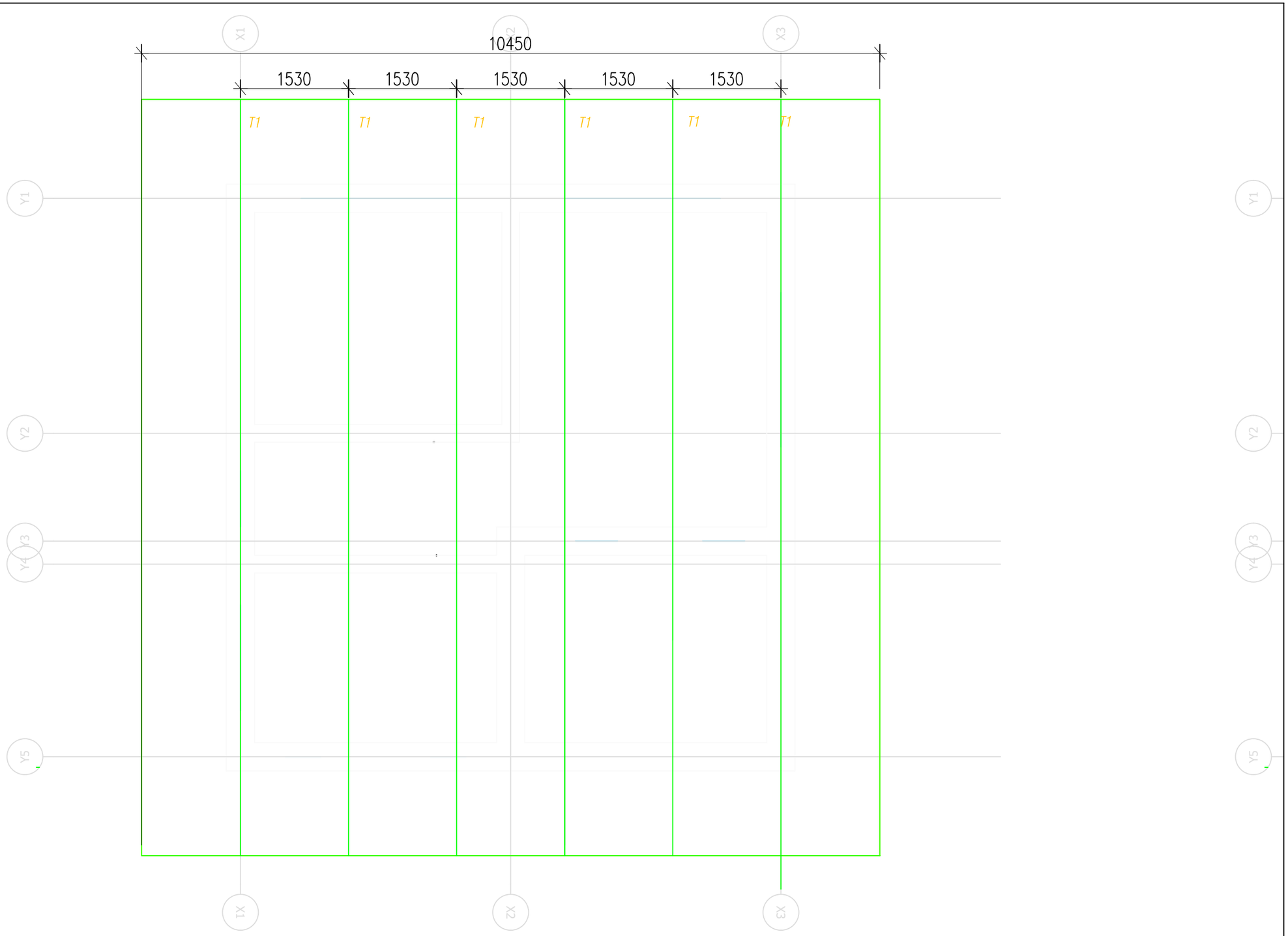

Roof Truss Layout Plan

Khorlochhu	STRUCTURAL DRAWING	NOTES	CHECKED	APPROVED	DATE	DRAWING NO.
	PROJECT TITLE: Construction of Doksum Primary School	DRAWING TITLE: AS_STATED_IN_DRAWING				STR_09
		1. ALL DIMENSIONS ARE IN MILLIMETER & ELEVATION IN METER UNLESS SPECIFIED OTHERWISE. 2. ALL DIMENSIONS MEASURE UNFINISHED SURFACES UNLESS SPECIFIED OTHERWISE. 3. DIMENSIONS ARE TO BE READ AND NOT SCALED OFF. 4. ANY DISCREPANCIES IN THE DRAWING ARE TO BE BROUGHT TO THE IMMEDIATE NOTICE OF THE SUPERVISION TEAM.			MARCH, 2026	SCALE: NTS

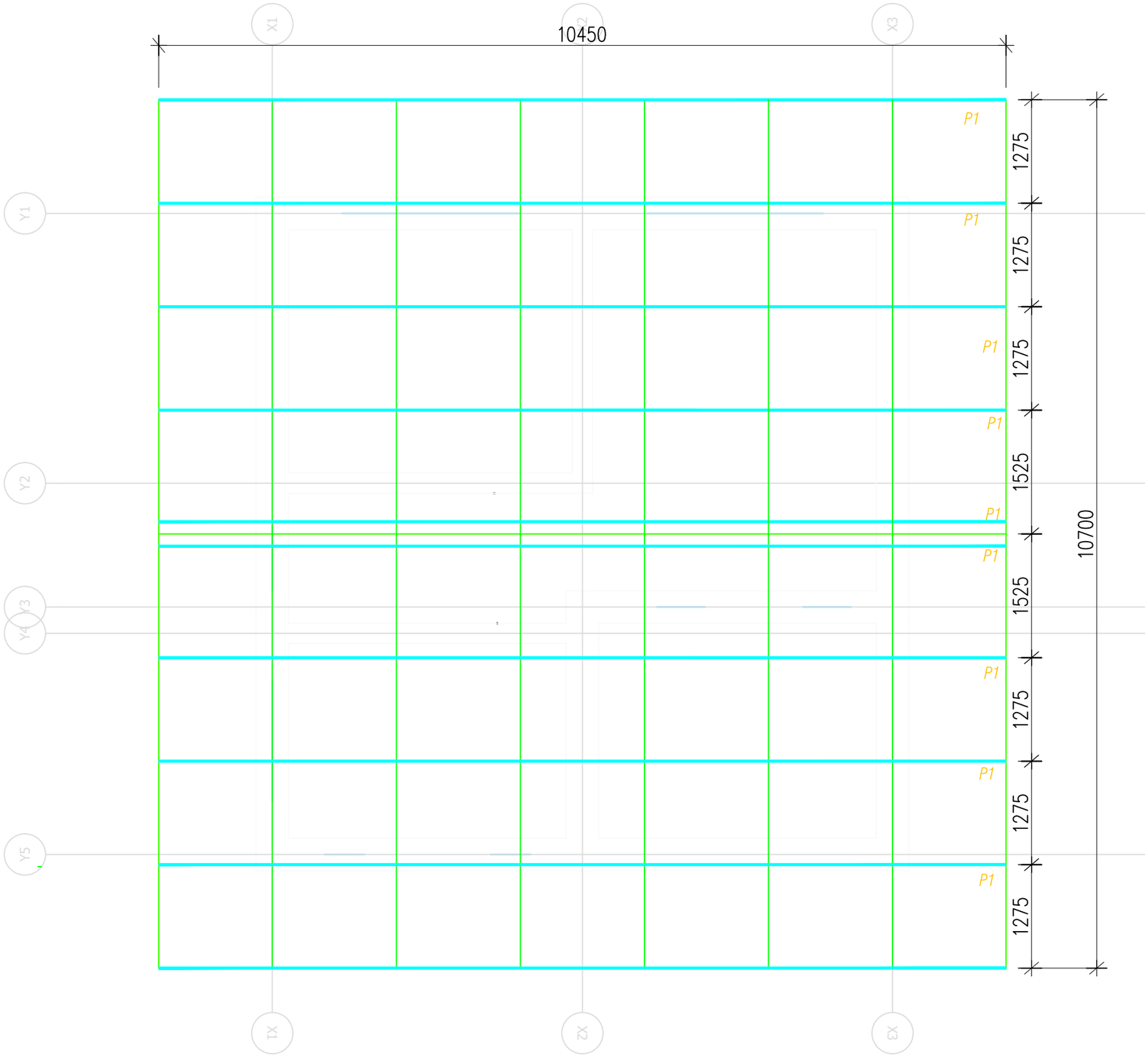

Roof Purlin Layout Plan

Khorlochhu	STRUCTURAL DRAWING	NOTES	CHECKED	APPROVED	DATE	DRAWING NO.
	PROJECT TITLE: Construction of Doksum Primary School	1. ALL DIMENSIONS ARE IN MILLIMETER & ELEVATION IN METER UNLESS SPECIFIED OTHERWISE. 2. ALL DIMENSIONS MEASURE UNFINISHED SURFACES UNLESS SPECIFIED OTHERWISE. 3. DIMENSIONS ARE TO BE READ AND NOT SCALED OFF. 4. ANY DISCREPANCIES IN THE DRAWING ARE TO BE BROUGHT TO THE IMMEDIATE NOTICE OF THE SUPERVISION TEAM.			MARCH, 2026	STR_10
	DRAWING TITLE: AS_STATED_IN_DRAWING					SCALE: NTS

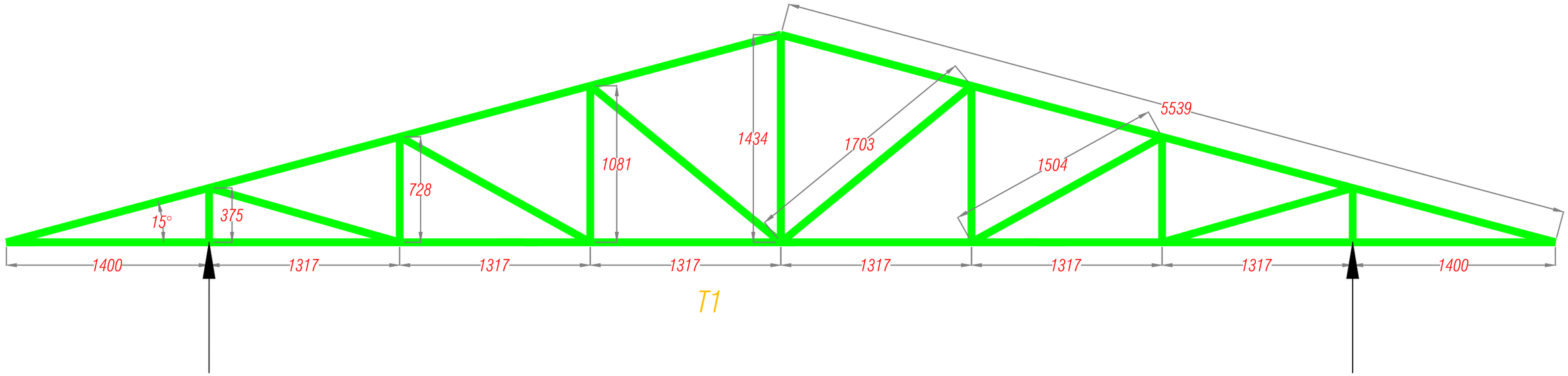

Truss Details

Note: Purlins to be placed at 1100mm c/c

Truss member size:

Sl No.	Particulars	Size
1	Rafter	50 NB light
2	Bottom Chord	50 NB light
3	Vertical and Diagonal struts	40 NB light
4	Purlin	40 NB light

Khorlochhu

STRUCTURAL DRAWING

PROJECT TITLE	DRAWING TITLE
Construction of Doksum Primary School	AS_STATED_IN_DRAWING

NOTES

1. ALL DIMENSIONS ARE IN MILLIMETER & ELEVATION IN METER UNLESS SPECIFIED OTHERWISE.
2. ALL DIMENSIONS MEASURE UNFINISHED SURFACES UNLESS SPECIFIED OTHERWISE.
3. DIMENSIONS ARE TO BE READ AND NOT SCALED OFF.
4. ANY DISCREPANCIES IN THE DRAWING ARE TO BE BROUGHT TO THE IMMEDIATE NOTICE OF THE SUPERVISION TEAM.

CHECKED	APPROVED	DATE	DRAWING NO.
			STR_11
		MARCH, 2026	SCALE
			NTS

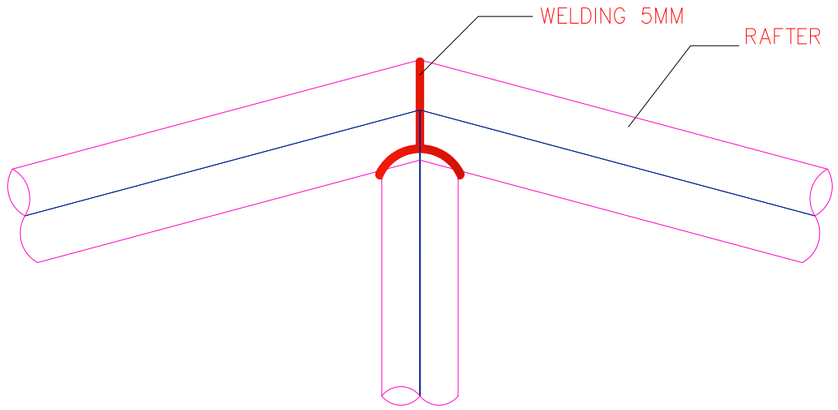

DETAIL AT A

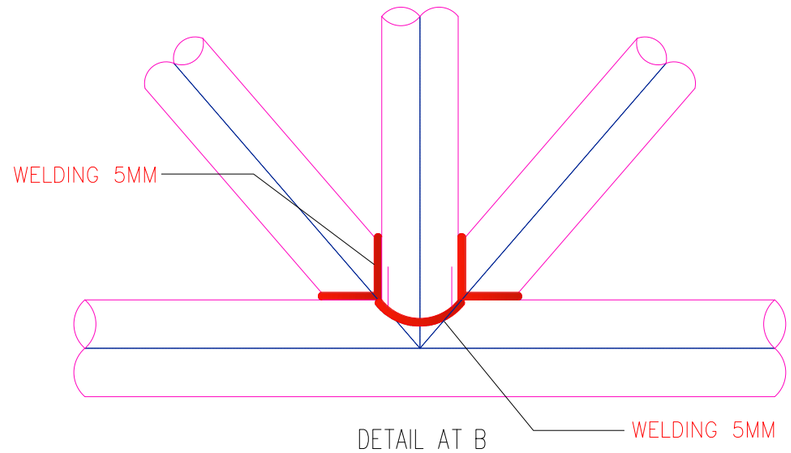

DETAIL AT B

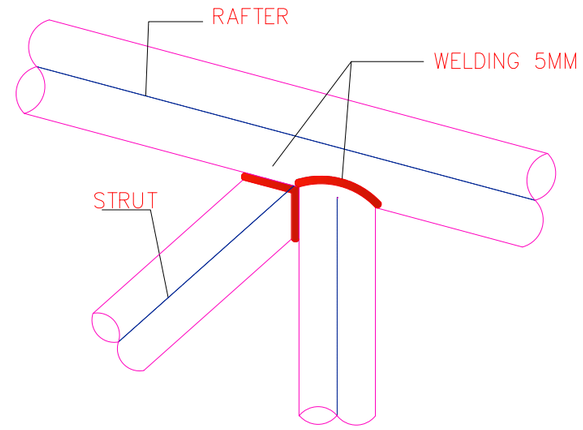

DETAIL AT C

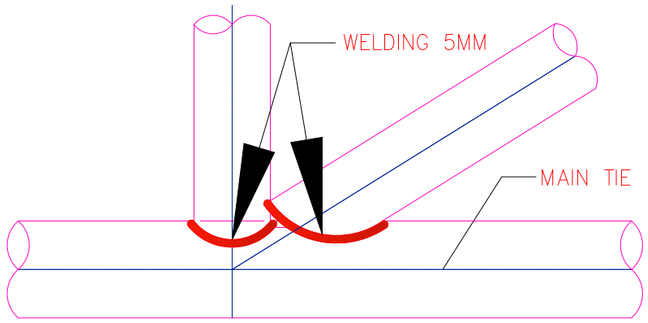

DETAIL AT D

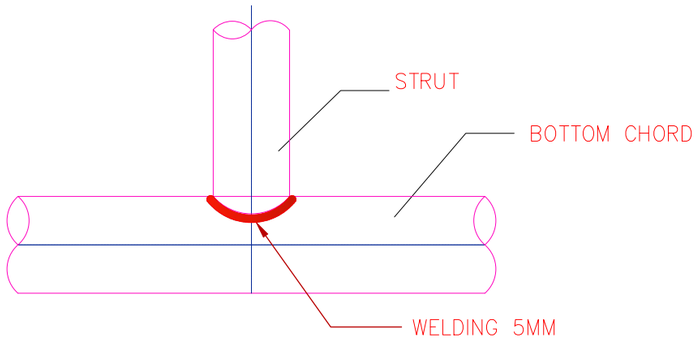

DETAIL AT E

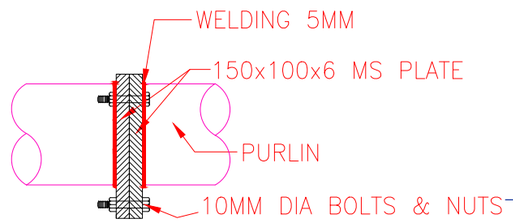

TYPICAL PURLIN & RAFTER JOINERY DETAIL

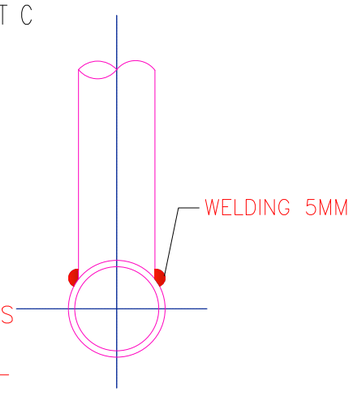

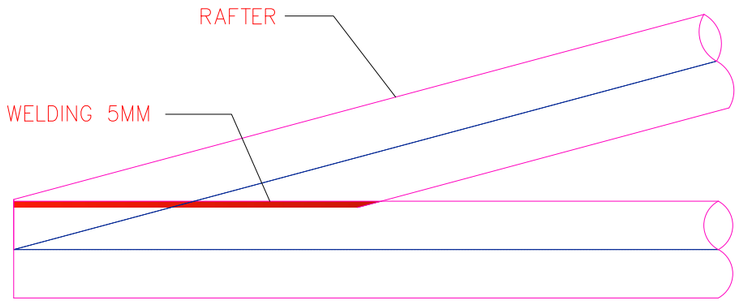

DETAIL AT F

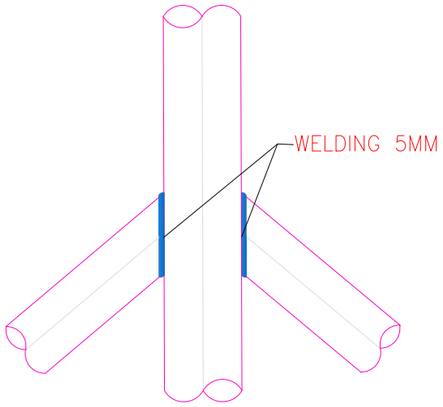

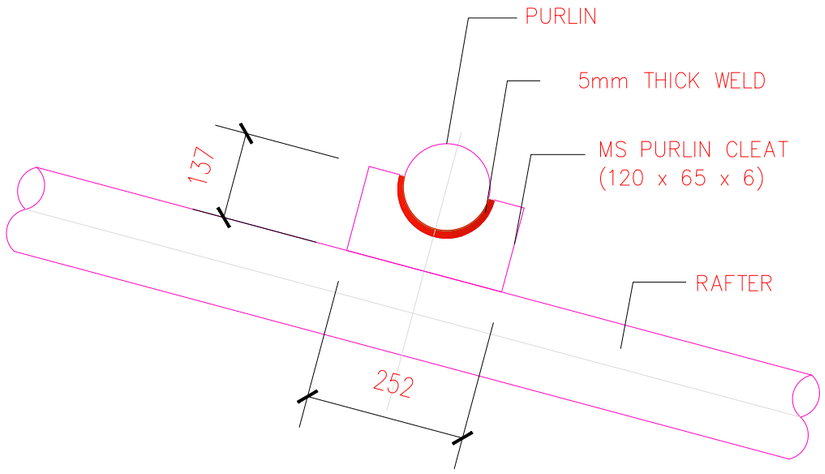

TRUSS MEMBER CONNECTION DETAILS

Khorlochhu

STRUCTURAL DRAWING		NOTES	CHECKED	APPROVED	DATE	DRAWING NO.
PROJECT TITLE	DRAWING TITLE	1. ALL DIMENSIONS ARE IN MILLIMETER & ELEVATION IN METER UNLESS SPECIFIED OTHERWISE. 2. ALL DIMENSIONS MEASURE UNFINISHED SURFACES UNLESS SPECIFIED OTHERWISE. 3. DIMENSIONS ARE TO BE READ AND NOT SCALED OFF. 4. ANY DISCREPANCIES IN THE DRAWING ARE TO BE BROUGHT TO THE IMMEDIATE NOTICE OF THE SUPERVISION TEAM.				STR_12
Construction of Doksum Primary School	AS_STATED_IN_DRAWING				MARCH, 2026	SCALE NTS

ELECTRICAL DRAWINGS

CARETAKER'S QUARTER

Owner - Khorlochhu Hydro Power Limited
Location - Doksum New Township, Trashiyangtse

Khorlochhu

LEGENDS

SYMBOLS	SPECIFICATIONS
	6W LED Ceiling Light
	20W LED Tube Light
	60W , 1200 sweep Ceiling Fan
	6A Modular Switches
	80W Exhaust Fan
	6W Wall mounted LED light
	5/6 Pin 16 Amps Switch/Socket Combined with indicator, 230V A.C.
	Switch Board with 6A Socket.
	Call Bell Switch (6/10A).
	Call Bell, 60W for calculation.
TV	Television Point Outlet Socket,Modular Type
SDB	Sub Distribution Board,Double Door Type(SDB)
	Main Control Panel Board (MCPB)

Notes 1:

1. Light points wiring shall be with 1.5sq.mm PVC insulated copper conductor
2. Light supply circuit shall be done with 2.5sq.mm PVC insulated copper conductor
3. Power circuits shall be done with 4sq.mm PVC insulated copper conductor.
4. Different conduit lines shall be used for wiring with different phases.
5. Power points wiring below window shall not be dropped from above but supplied from below the window seal level.
6. Light switchboards shall be 1400mm from finished floor level to top.
7. Power sockets shall be 400mm from finished floor level to top except in Kitchen or toilets/bathrooms (wet area) where the height shall be 1400mm from floor to bottom.
8. No power point shall be looped.
9. Main switch boards are to be flushed in the wall 230mm below the ceiling level.

Notes 2:

1. Telephone wiring shall be with 0.5Sq.mm PVC insulated and sheathed copper conductor.
2. Ducting to be at least 500mm away from electrical cable routes.
3. To provide bridging where telephone and electric cables cross.
4. Telephone terminal cabinet shall be 300x300x150mm with hole punches to receive 25mm dia conduit on all four sides and mounted at 2500mm above floor level.
5. Cable ducting shall be provided with 25mm dia PVC conduit and shall be common for drawing of TV cables.
6. RJ-11 sockets shall be provided for telephone points.
7. To supply direct lines for all the rooms where points are marked, from the terminal cabinet.
8. The incoming lines shall be brought and connected to incoming side of the terminal cabinet from where lines to all the rooms commence

Khorlochhu

ELECTRICAL DRAWING

PROJECT TITLE	DRAWING TITLE
Construction of Doksum Primary School	NOTE_&_SPECIFICATION

NOTES

1. ALL DIMENSIONS ARE IN MILLIMETER & ELEVATION IN METER UNLESS SPECIFIED OTHERWISE.
2. ALL DIMENSIONS MEASURE UNFINISHED SURFACES UNLESS SPECIFIED OTHERWISE.
3. DIMENSIONS ARE TO BE READ AND NOT SCALED OFF.
4. ANY DISCREPANCIES IN THE DRAWING ARE TO BE BROUGHT TO THE IMMEDIATE NOTICE OF THE SUPERVISION TEAM.

CHECKED	APPROVED	DATE	DRAWING NO.
			EL_1
		MARCH, 2026	SCALE
			NTS

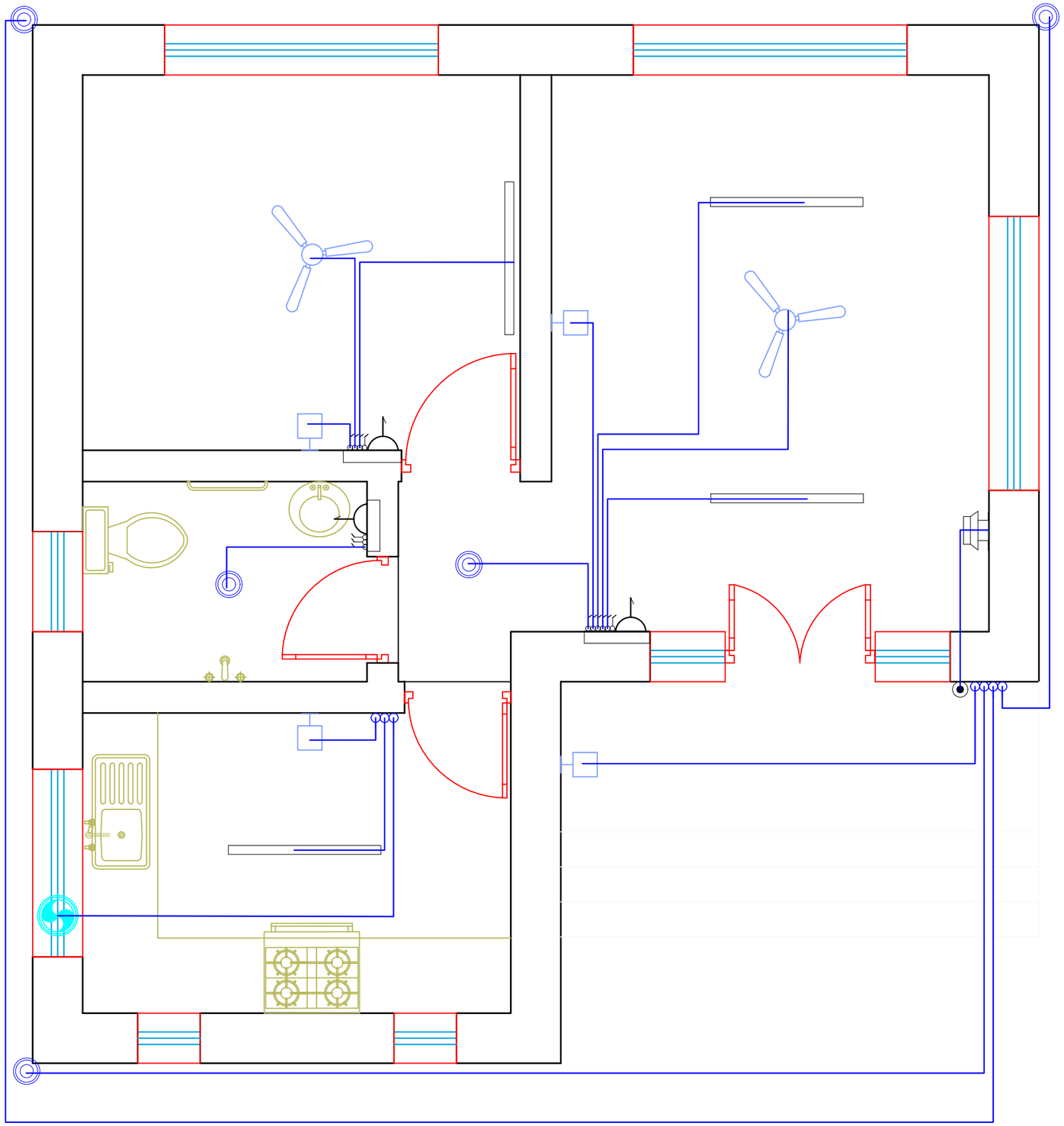

Khorlochhu

ELECTRICAL DRAWING

PROJECT TITLE	DRAWING TITLE
Construction of Doksum Primary School	FITTING_POINTS

NOTES

1. ALL DIMENSIONS ARE IN MILLIMETER & ELEVATION IN METER UNLESS SPECIFIED OTHERWISE.
2. ALL DIMENSIONS MEASURE UNFINISHED SURFACES UNLESS SPECIFIED OTHERWISE.
3. DIMENSIONS ARE TO BE READ AND NOT SCALED OFF.
4. ANY DISCREPANCIES IN THE DRAWING ARE TO BE BROUGHT TO THE IMMEDIATE NOTICE OF THE SUPERVISION TEAM.

CHECKED	APPROVED	DATE	DRAWING NO.
			EL_2
		MARCH, 2026	SCALE
			NTS

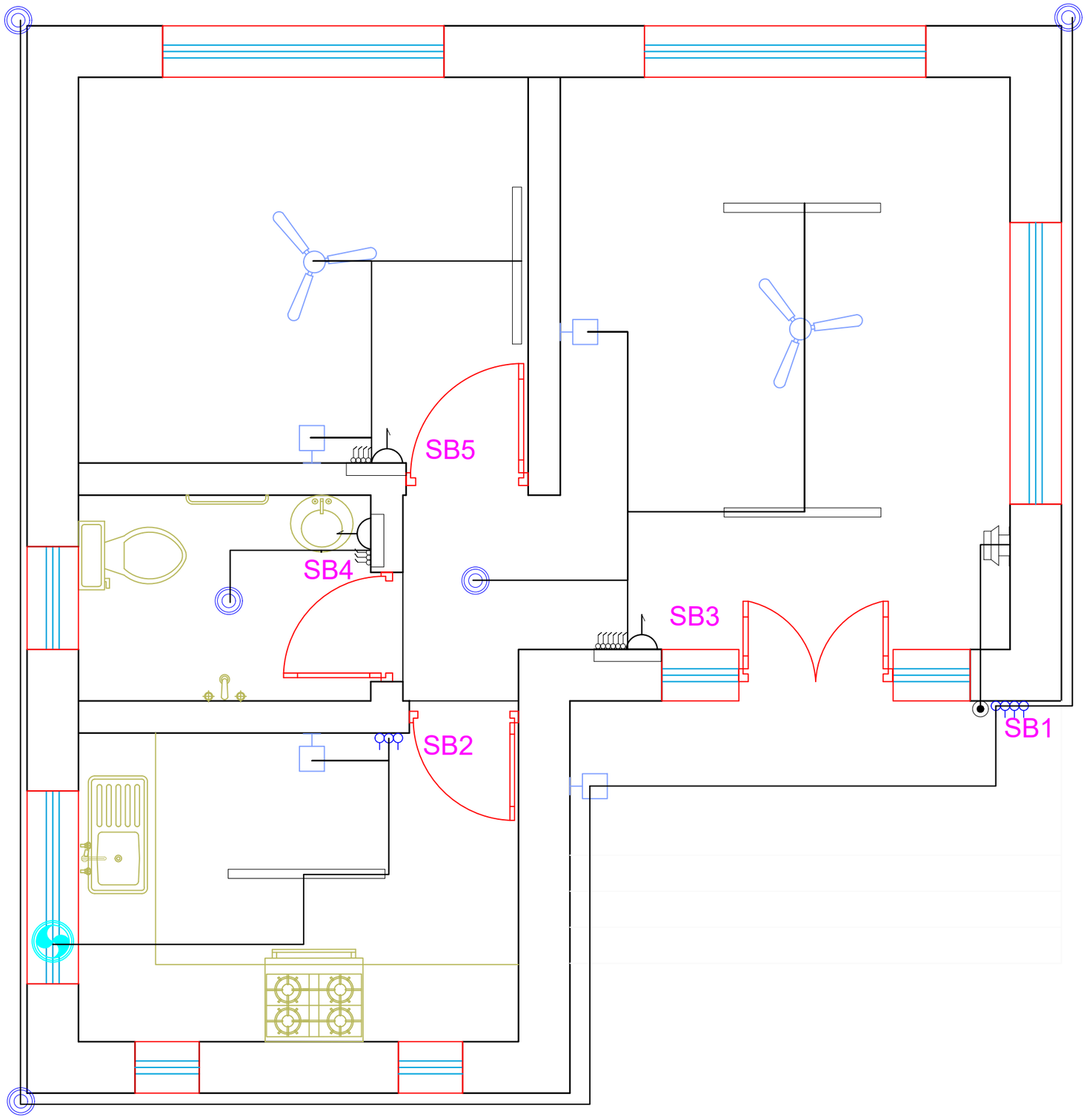

Khorlochhu

ELECTRICAL DRAWING

PROJECT TITLE	DRAWING TITLE
Construction of Doksum Primary School	FITTINGS_&_CONDUIT_LAYOUT

NOTES

1. ALL DIMENSIONS ARE IN MILLIMETER & ELEVATION IN METER UNLESS SPECIFIED OTHERWISE.
2. ALL DIMENSIONS MEASURE UNFINISHED SURFACES UNLESS SPECIFIED OTHERWISE.
3. DIMENSIONS ARE TO BE READ AND NOT SCALED OFF.
4. ANY DISCREPANCIES IN THE DRAWING ARE TO BE BROUGHT TO THE IMMEDIATE NOTICE OF THE SUPERVISION TEAM.

CHECKED	APPROVED	DATE	DRAWING NO.
			EL_3
		MARCH, 2026	SCALE
			NTS

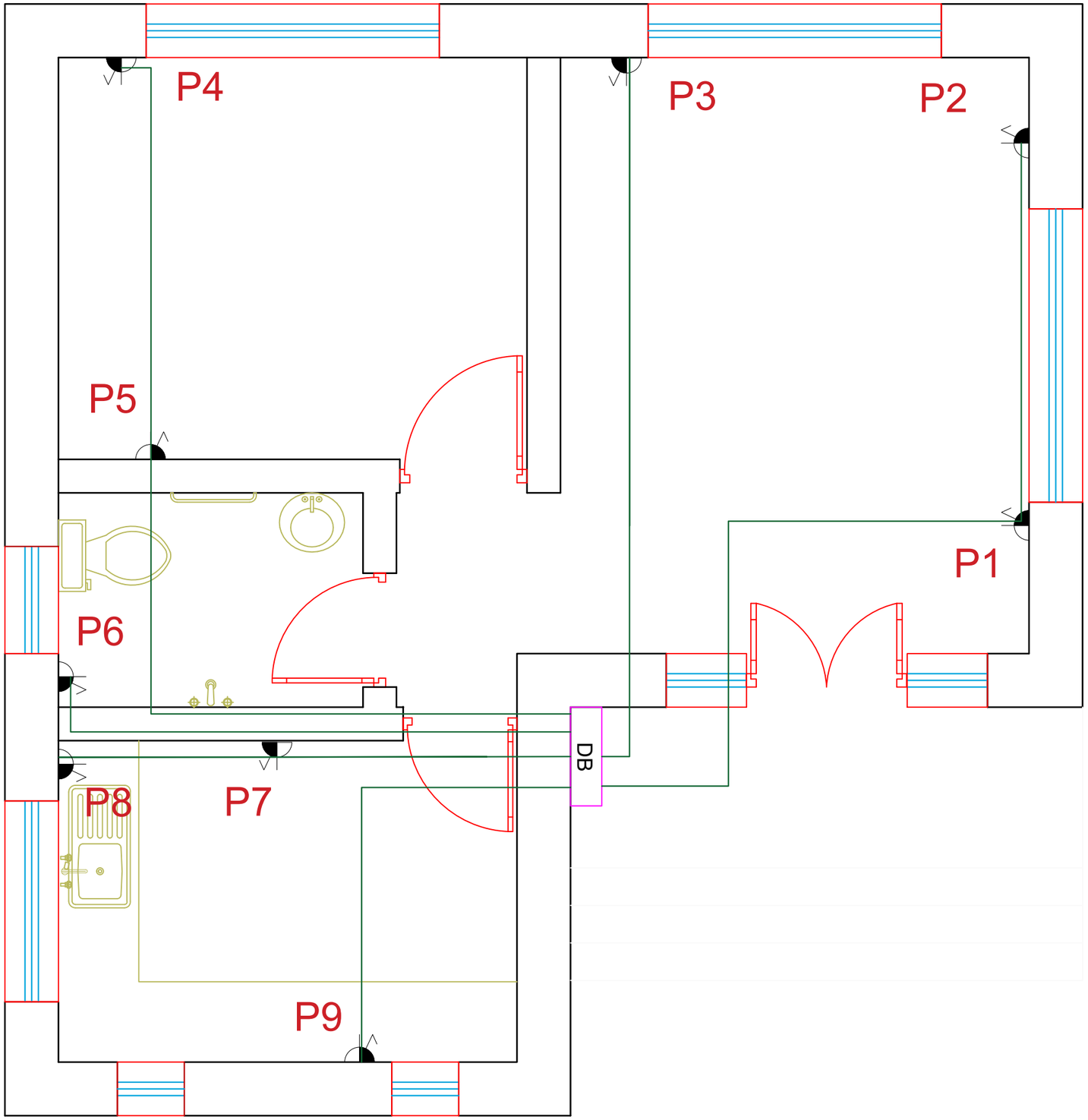

Khorlochhu

ELECTRICAL DRAWING

PROJECT TITLE	DRAWING TITLE
Construction of Doksum Primary School	POWER_SOCKET_OUTLET_&_CONDUITS_LAYOUT

NOTES

1. ALL DIMENSIONS ARE IN MILLIMETER & ELEVATION IN METER UNLESS SPECIFIED OTHERWISE.
2. ALL DIMENSIONS MEASURE UNFINISHED SURFACES UNLESS SPECIFIED OTHERWISE.
3. DIMENSIONS ARE TO BE READ AND NOT SCALED OFF.
4. ANY DISCREPANCIES IN THE DRAWING ARE TO BE BROUGHT TO THE IMMEDIATE NOTICE OF THE SUPERVISION TEAM.

CHECKED	APPROVED	DATE	DRAWING NO.
			EL_4
		MARCH, 2026	SCALE
			NTS

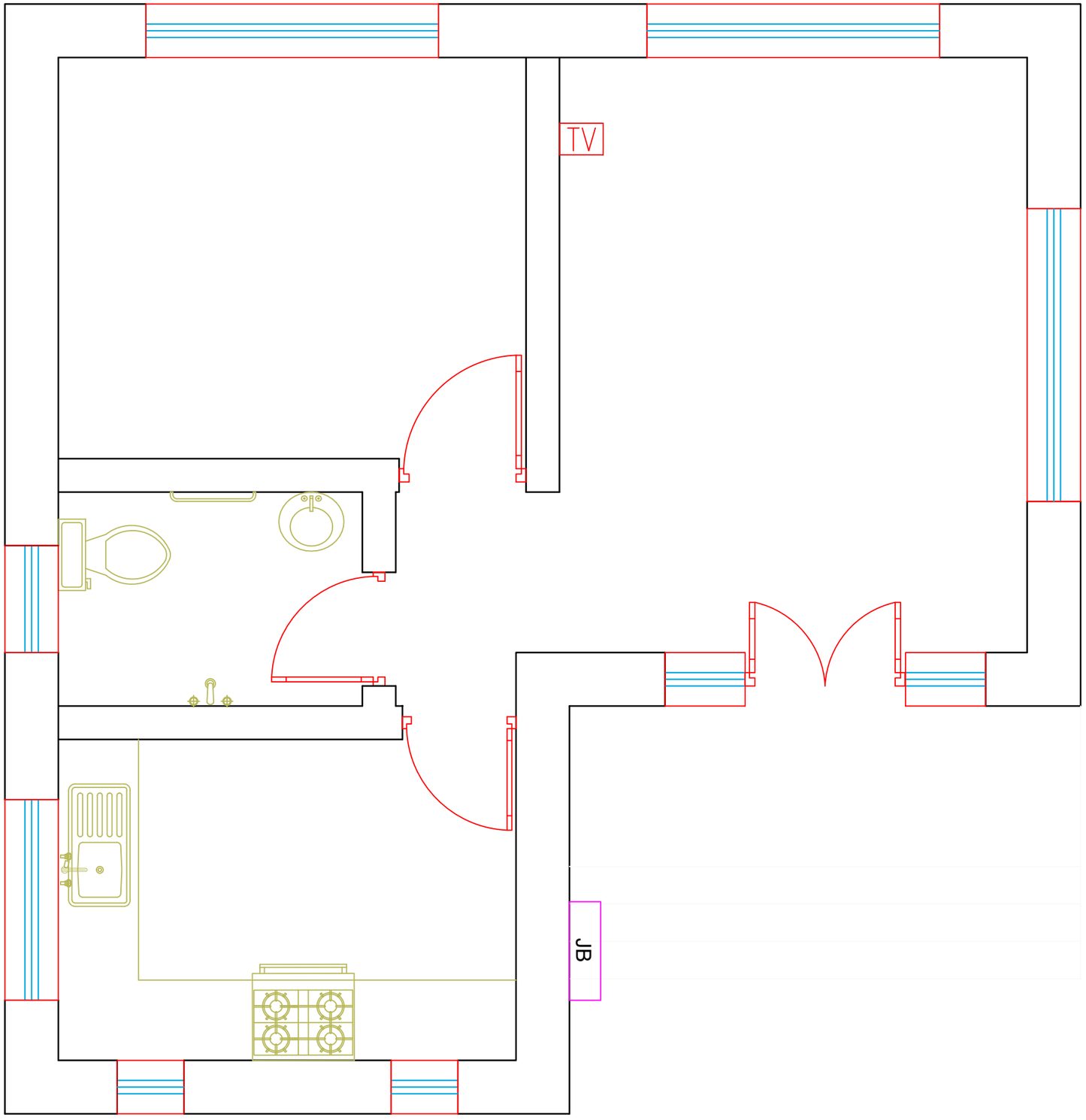

Khorlochhu

ELECTRICAL DRAWING

PROJECT TITLE	DRAWING TITLE
Construction of Doksum Primary School	TELEVISION_OUTLET_LAYOUT

NOTES

1. ALL DIMENSIONS ARE IN MILLIMETER & ELEVATION IN METER UNLESS SPECIFIED OTHERWISE.
2. ALL DIMENSIONS MEASURE UNFINISHED SURFACES UNLESS SPECIFIED OTHERWISE.
3. DIMENSIONS ARE TO BE READ AND NOT SCALED OFF.
4. ANY DISCREPANCIES IN THE DRAWING ARE TO BE BROUGHT TO THE IMMEDIATE NOTICE OF THE SUPERVISION TEAM.

CHECKED	APPROVED	DATE	DRAWING NO.
			EL_5
		MARCH, 2026	SCALE
			NTS

DISTRIBUTION BOARD

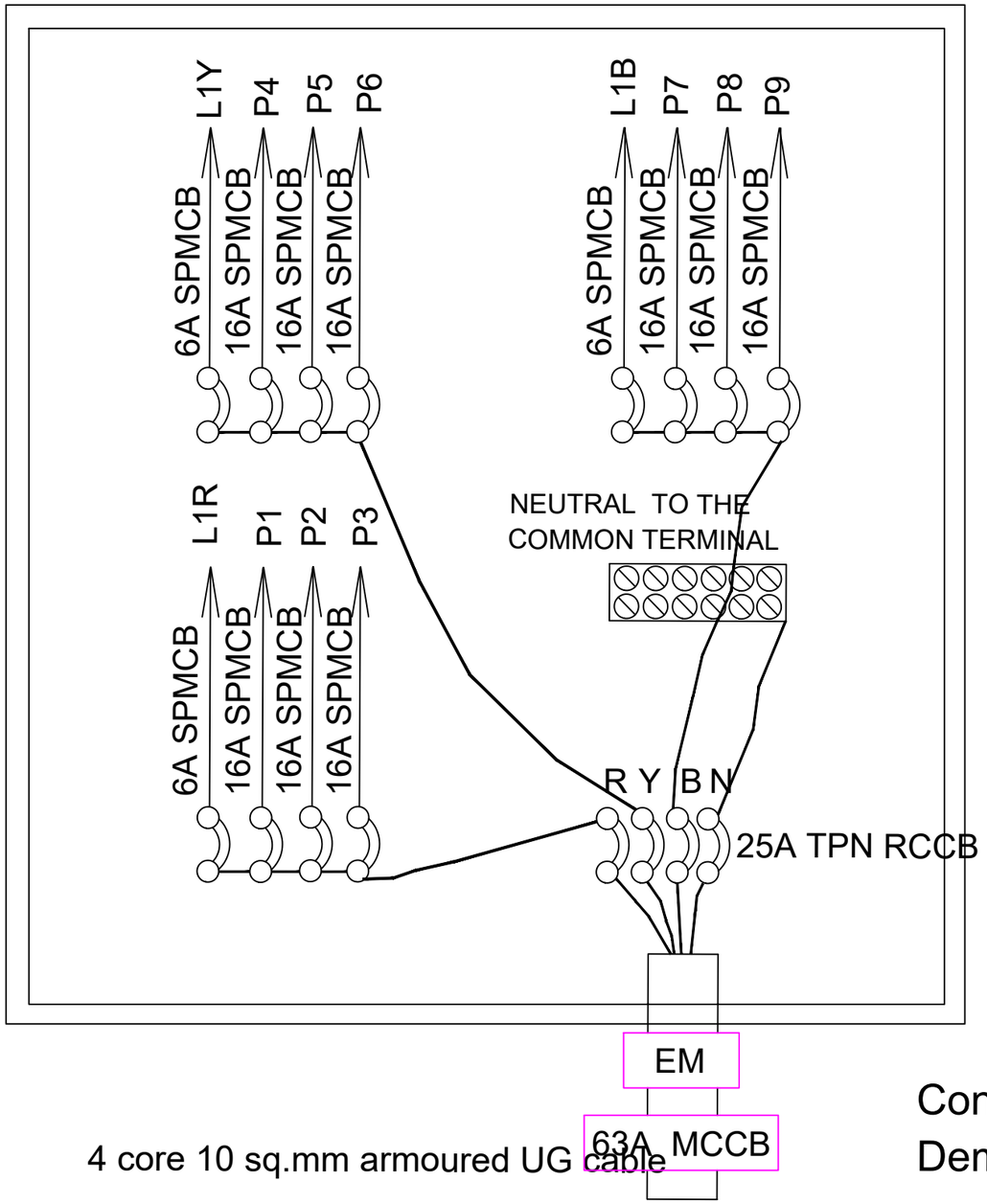

4 core 10 sq.mm armoured UG cable

4 WAY TPN DB,DOUBLE DOOR TYPE & 25A TPN RCCB WITH FOLLOWING OUTGOING:
6A SPMCB - 3 NOs.
16A SPMCB - 9 NOs.

BALANCE LOAD IN WATTS

R-PHASE	Y-PHASE	B-PHASE
L1- 178	L1- 212	L1- 292
P1- 2000	P4- 2000	P7-2000
P2- 2000	P5- 2000	P8-2000
P3- 2000	P6- 2000	P9-2000
6,178	6,212	6,292

L1R=SB1,SB2
L1Y=SB3
L1B=SB4,SB5

Connected load= 18,682 W
Demand load(L.F- 70%)= 13,077 W

Khorlochhu

ELECTRICAL DRAWING

PROJECT TITLE	DRAWING TITLE
Construction of Doksum Primary School	MDB_DETAILS

NOTES
1. ALL DIMENSIONS ARE IN MILLIMETER & ELEVATION IN METER UNLESS SPECIFIED OTHERWISE.
2. ALL DIMENSIONS MEASURE UNFINISHED SURFACES UNLESS SPECIFIED OTHERWISE.
3. DIMENSIONS ARE TO BE READ AND NOT SCALED OFF.
4. ANY DISCREPANCIES IN THE DRAWING ARE TO BE BROUGHT TO THE IMMEDIATE NOTICE OF THE SUPERVISION TEAM.

CHECKED	APPROVED	DATE	DRAWING NO.
			EL_6
		MARCH, 2026	SCALE
			NTS

ARCHITECTURAL DRAWINGS

ADMINISTRATION BLOCK

Owner - Khorlochhu Hydro Power Limited
Location - Doksum New Township, Trashiyangtse

Khorlochhu

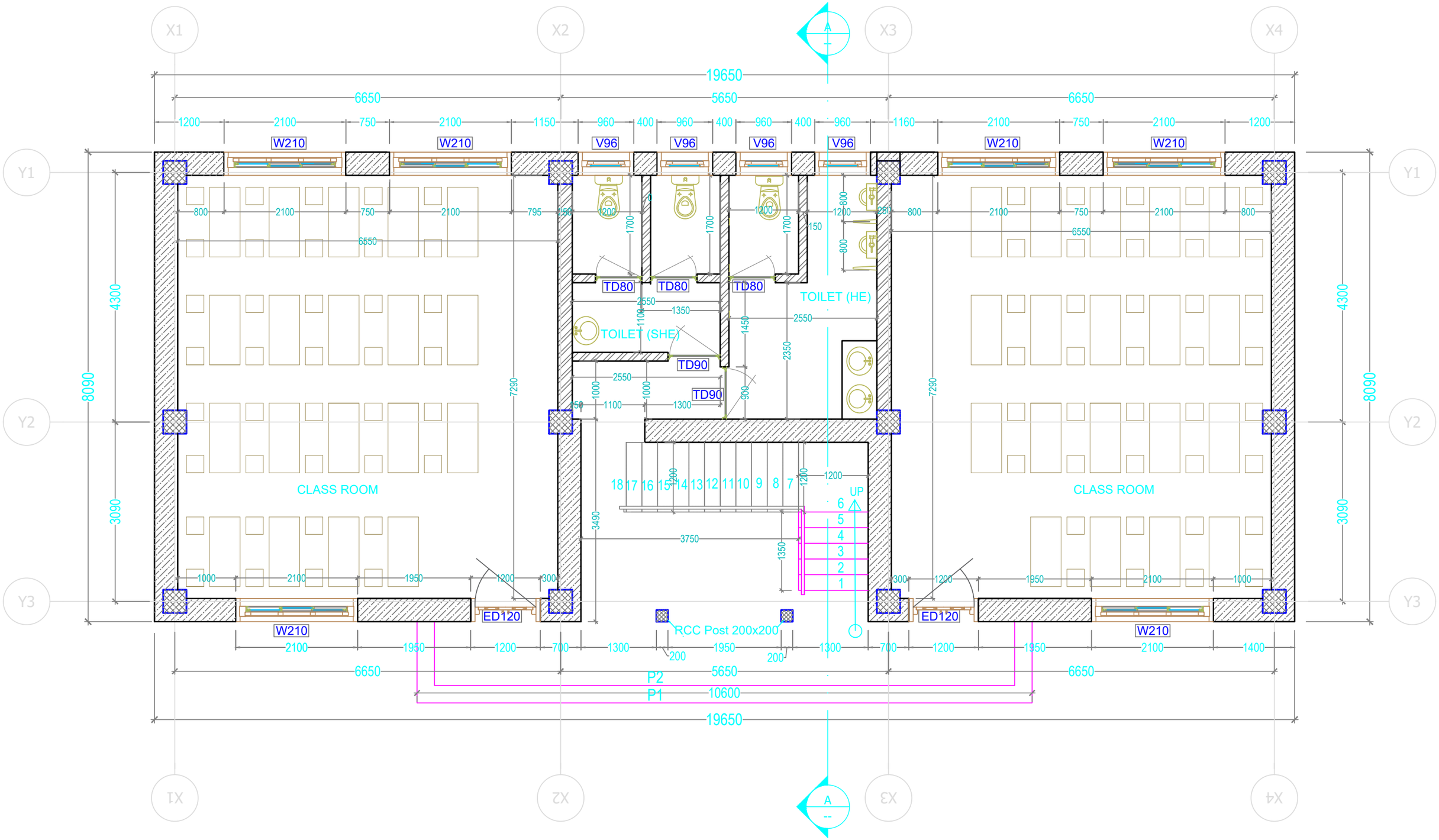

Khorlochhu

ARCHITECTURAL DRAWING

PROJECT TITLE	DRAWING TITLE
Construction of Doksum Primary School	GROUND_FLOOR_PLAN

NOTES

1. ALL DIMENSIONS ARE IN MILLIMETER & ELEVATION IN METER UNLESS SPECIFIED OTHERWISE.
2. ALL DIMENSIONS MEASURE UNFINISHED SURFACES UNLESS SPECIFIED OTHERWISE.
3. DIMENSIONS ARE TO BE READ AND NOT SCALED OFF.
4. ANY DISCREPANCIES IN THE DRAWING ARE TO BE BROUGHT TO THE IMMEDIATE NOTICE OF THE SUPERVISION TEAM.

CHECKED	APPROVED	DATE	DRAWING NO.
			AR_01
		MARCH, 2026	SCALE
			NTS

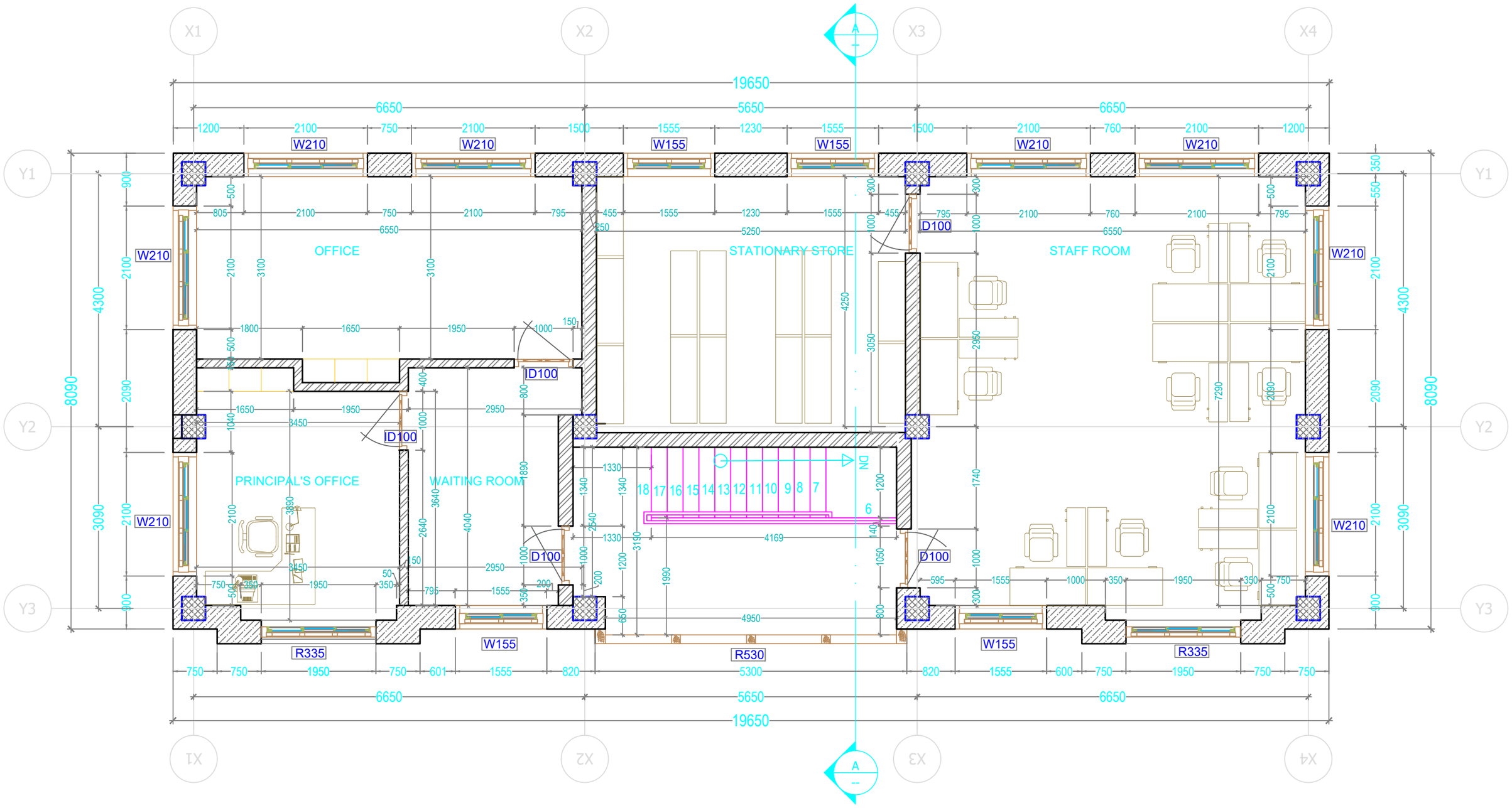

ARCHITECTURAL DRAWING

PROJECT TITLE	DRAWING TITLE
Construction of Doksum Primary School	FIRST_FLOOR_PLAN

NOTES

1. ALL DIMENSIONS ARE IN MILLIMETER & ELEVATION IN METER UNLESS SPECIFIED OTHERWISE.
2. ALL DIMENSIONS MEASURE UNFINISHED SURFACES UNLESS SPECIFIED OTHERWISE.
3. DIMENSIONS ARE TO BE READ AND NOT SCALED OFF.
4. ANY DISCREPANCIES IN THE DRAWING ARE TO BE BROUGHT TO THE IMMEDIATE NOTICE OF THE SUPERVISION TEAM.

CHECKED	APPROVED	DATE	DRAWING NO.
			AR_02
		MARCH, 2026	SCALE
			NTS

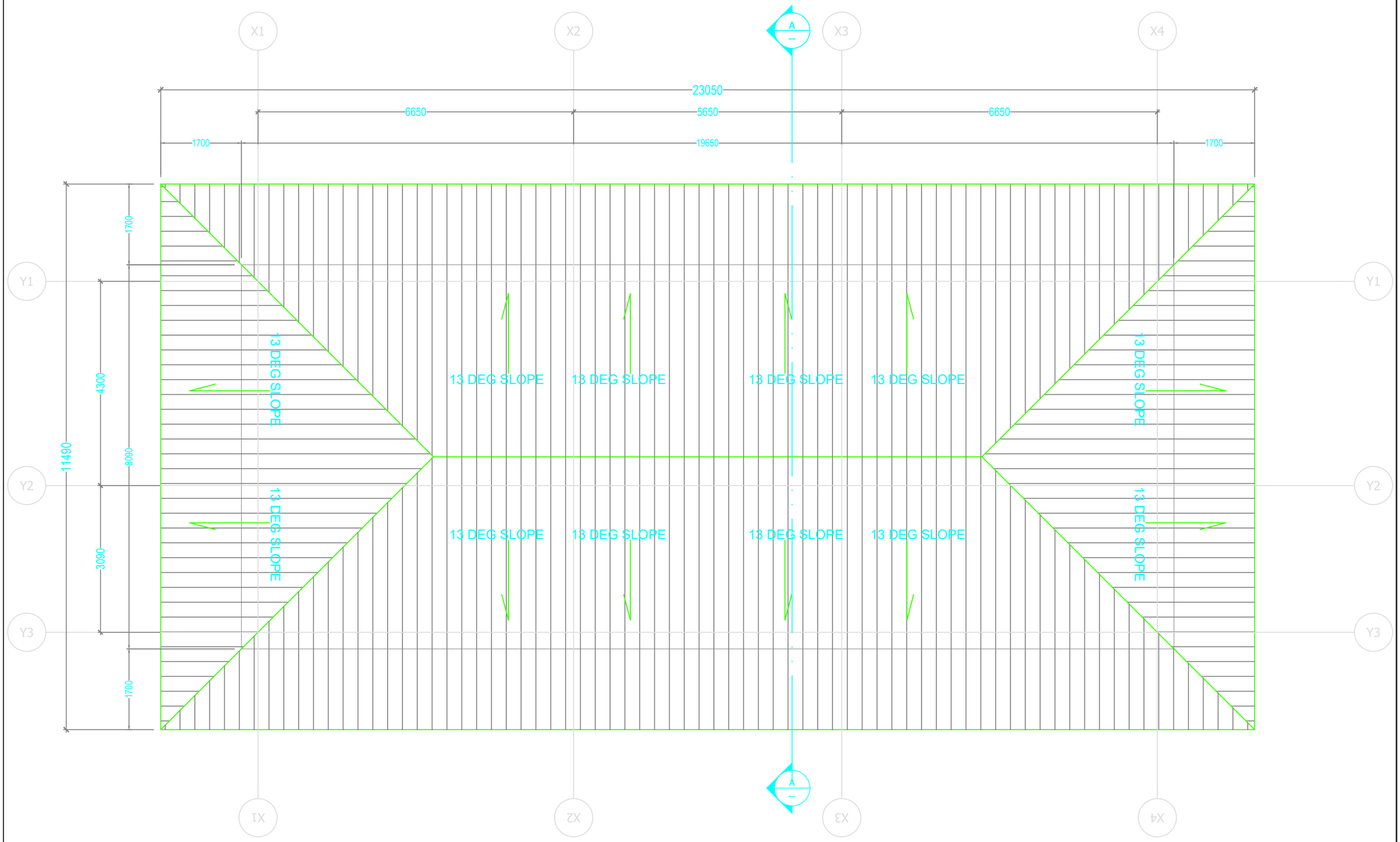

Khorlochhu

ARCHITECTURAL DRAWING

PROJECT TITLE	DRAWING TITLE
Construction of Doksum Primary School	ROOF_PLAN

NOTES

1. ALL DIMENSIONS ARE IN MILLIMETER & ELEVATION IN METER UNLESS SPECIFIED OTHERWISE.
2. ALL DIMENSIONS MEASURE UNFINISHED SURFACES UNLESS SPECIFIED OTHERWISE.
3. DIMENSIONS ARE TO BE READ AND NOT SCALED OFF.
4. ANY DISCREPANCIES IN THE DRAWING ARE TO BE BROUGHT TO THE IMMEDIATE NOTICE OF THE SUPERVISION TEAM.

CHECKED	APPROVED	DATE	DRAWING NO.
			AR_03
		MARCH, 2026	SCALE
			NTS

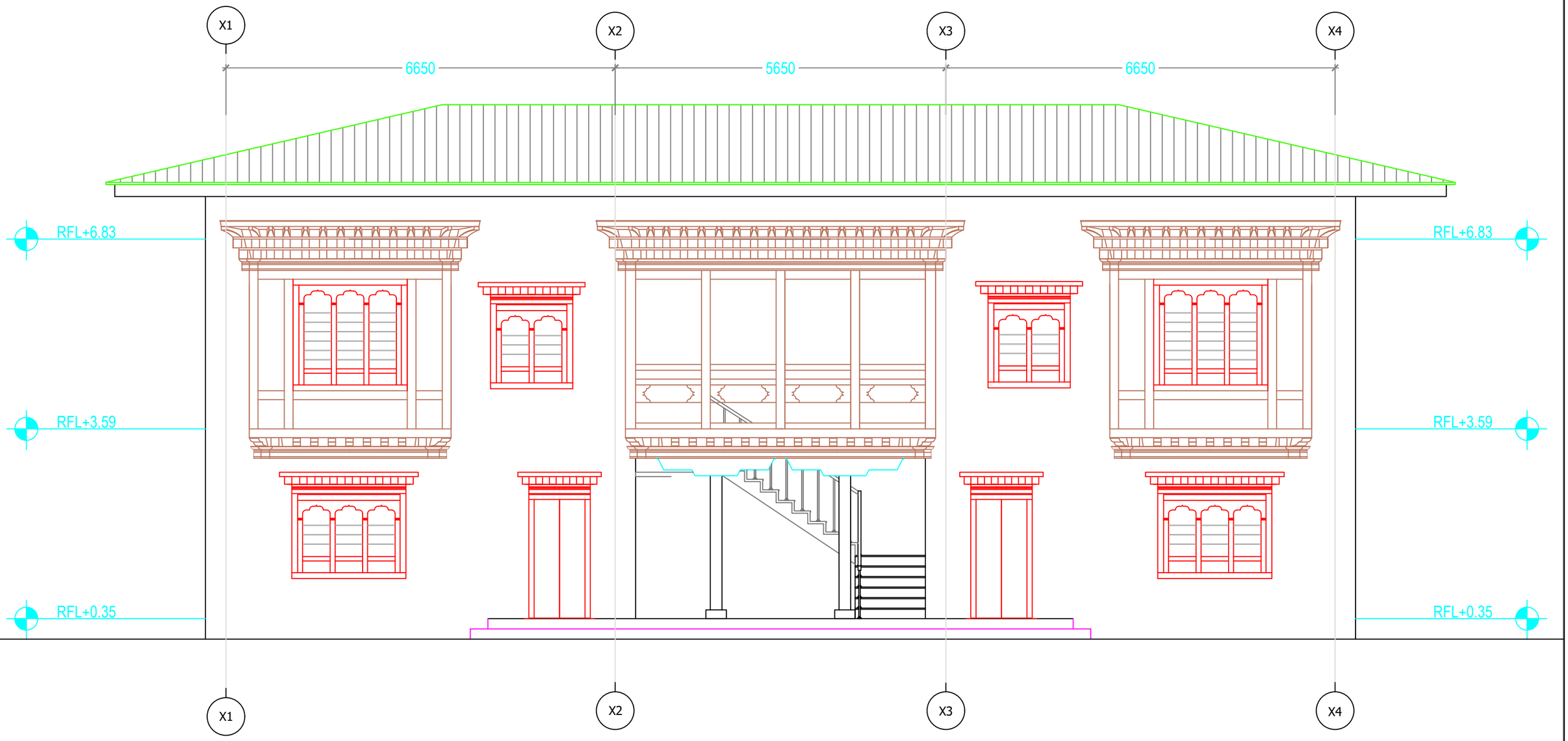

ELEVATION A

Khorlochhu	**ARCHITECTURAL DRAWING**	**NOTES**	**CHECKED**	**APPROVED**	**DATE**	**DRAWING NO.**
	PROJECT TITLE / **DRAWING TITLE**	1. ALL DIMENSIONS ARE IN MILLIMETER & ELEVATION IN METER UNLESS SPECIFIED OTHERWISE. 2. ALL DIMENSIONS MEASURE UNFINISHED SURFACES UNLESS SPECIFIED OTHERWISE. 3. DIMENSIONS ARE TO BE READ AND NOT SCALED OFF. 4. ANY DISCREPANCIES IN THE DRAWING ARE TO BE BROUGHT TO THE IMMEDIATE NOTICE OF THE SUPERVISION TEAM.				**AR_04**
	Construction of Doksum Primary School / **FRONT_ELEVATION**				MARCH, 2026	**SCALE**
						NTS

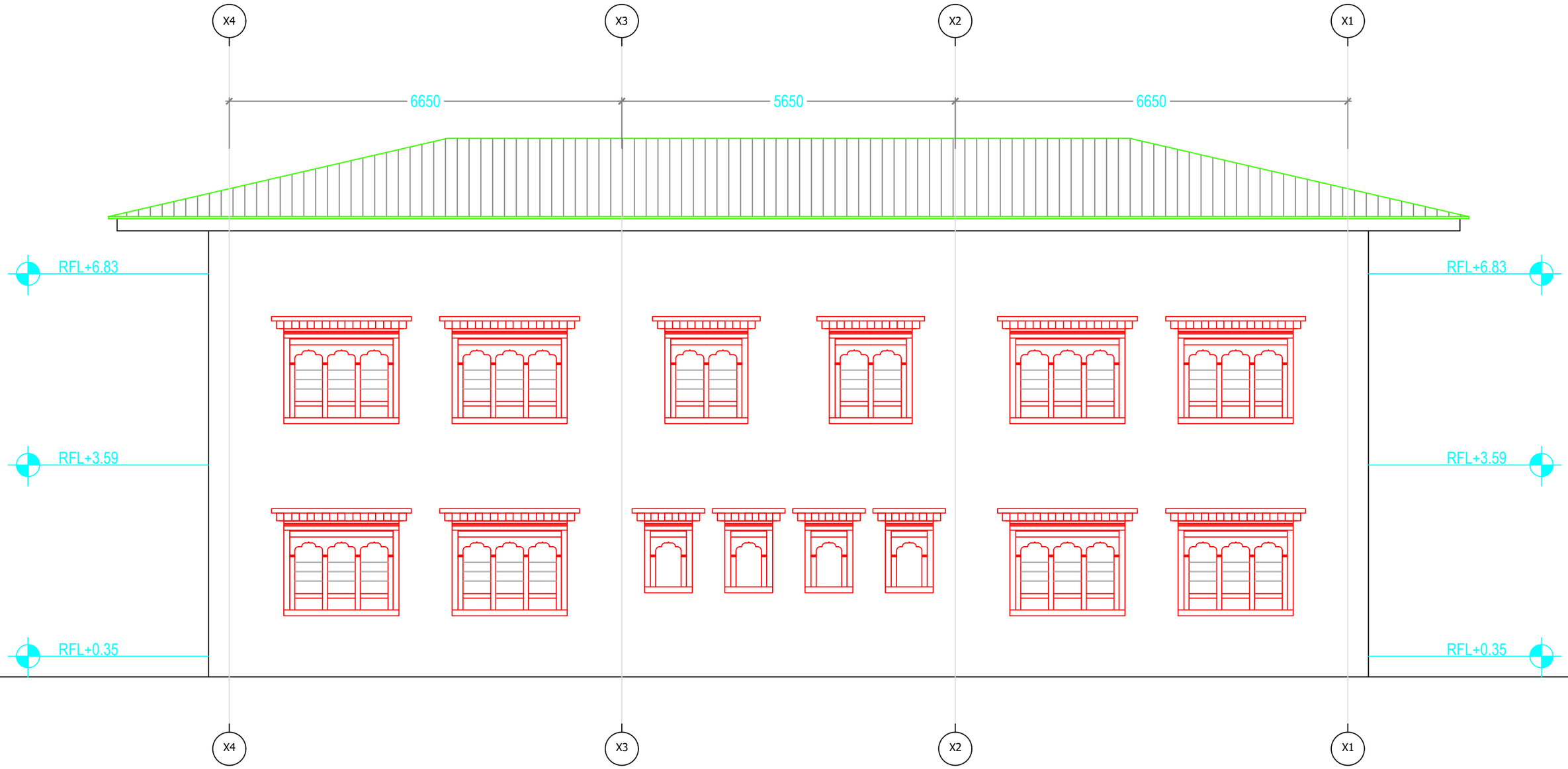

Khorlochhu

ARCHITECTURAL DRAWING

PROJECT TITLE	DRAWING TITLE
Construction of Doksum Primary School	REAR_ELEVATION

NOTES

1. ALL DIMENSIONS ARE IN MILLIMETER & ELEVATION IN METER UNLESS SPECIFIED OTHERWISE.
2. ALL DIMENSIONS MEASURE UNFINISHED SURFACES UNLESS SPECIFIED OTHERWISE.
3. DIMENSIONS ARE TO BE READ AND NOT SCALED OFF.
4. ANY DISCREPANCIES IN THE DRAWING ARE TO BE BROUGHT TO THE IMMEDIATE NOTICE OF THE SUPERVISION TEAM.

CHECKED	APPROVED	DATE	DRAWING NO.
			AR_05
		MARCH, 2026	SCALE
			NTS

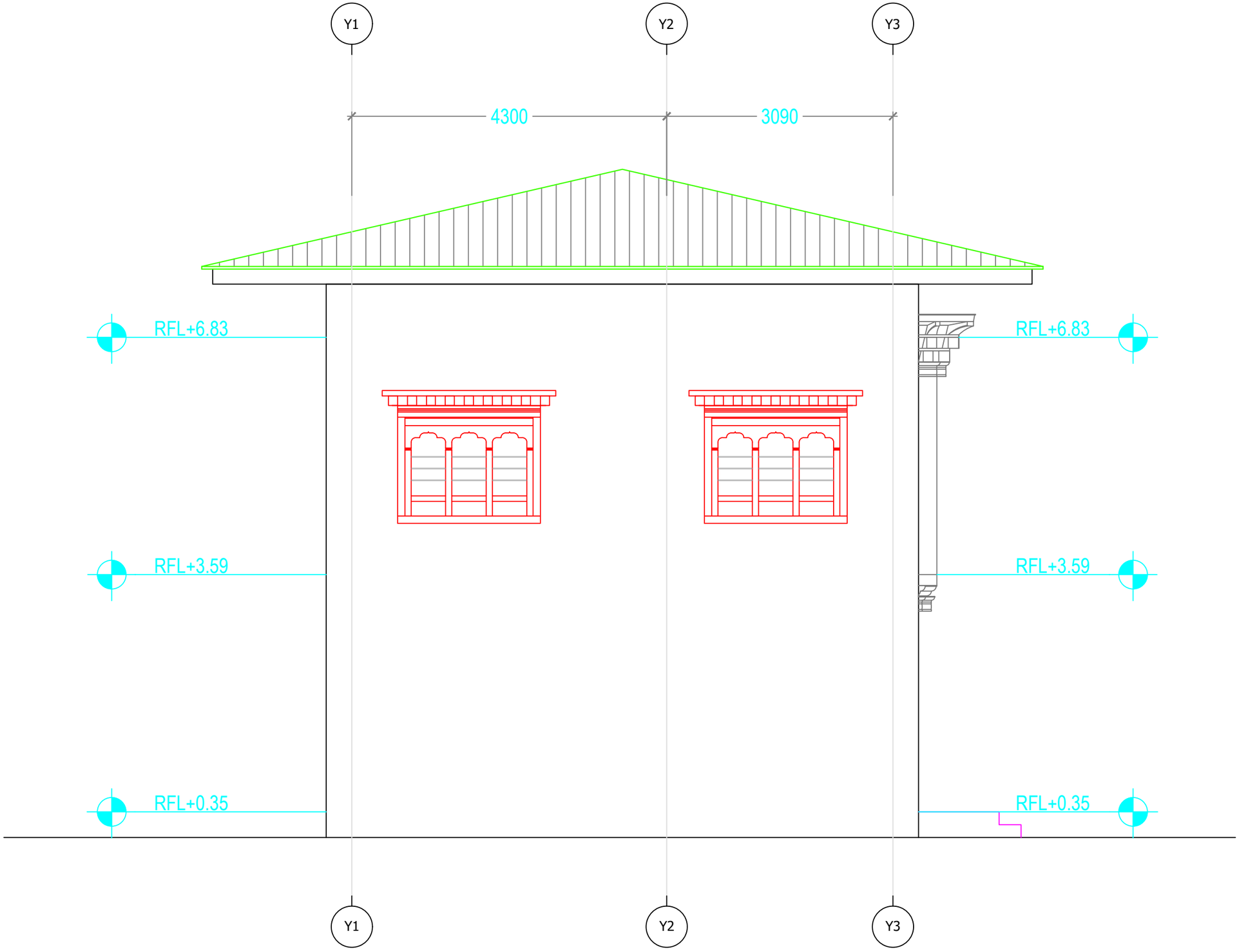

Khorlochhu

ARCHITECTURAL DRAWING

PROJECT TITLE	DRAWING TITLE
Construction of Doksum Primary School	RIGHT_SIDE_ELEVATION

NOTES

1. ALL DIMENSIONS ARE IN MILLIMETER & ELEVATION IN METER UNLESS SPECIFIED OTHERWISE.
2. ALL DIMENSIONS MEASURE UNFINISHED SURFACES UNLESS SPECIFIED OTHERWISE.
3. DIMENSIONS ARE TO BE READ AND NOT SCALED OFF.
4. ANY DISCREPANCIES IN THE DRAWING ARE TO BE BROUGHT TO THE IMMEDIATE NOTICE OF THE SUPERVISION TEAM.

CHECKED	APPROVED	DATE	DRAWING NO.
			AR_06
		MARCH, 2026	SCALE
			NTS

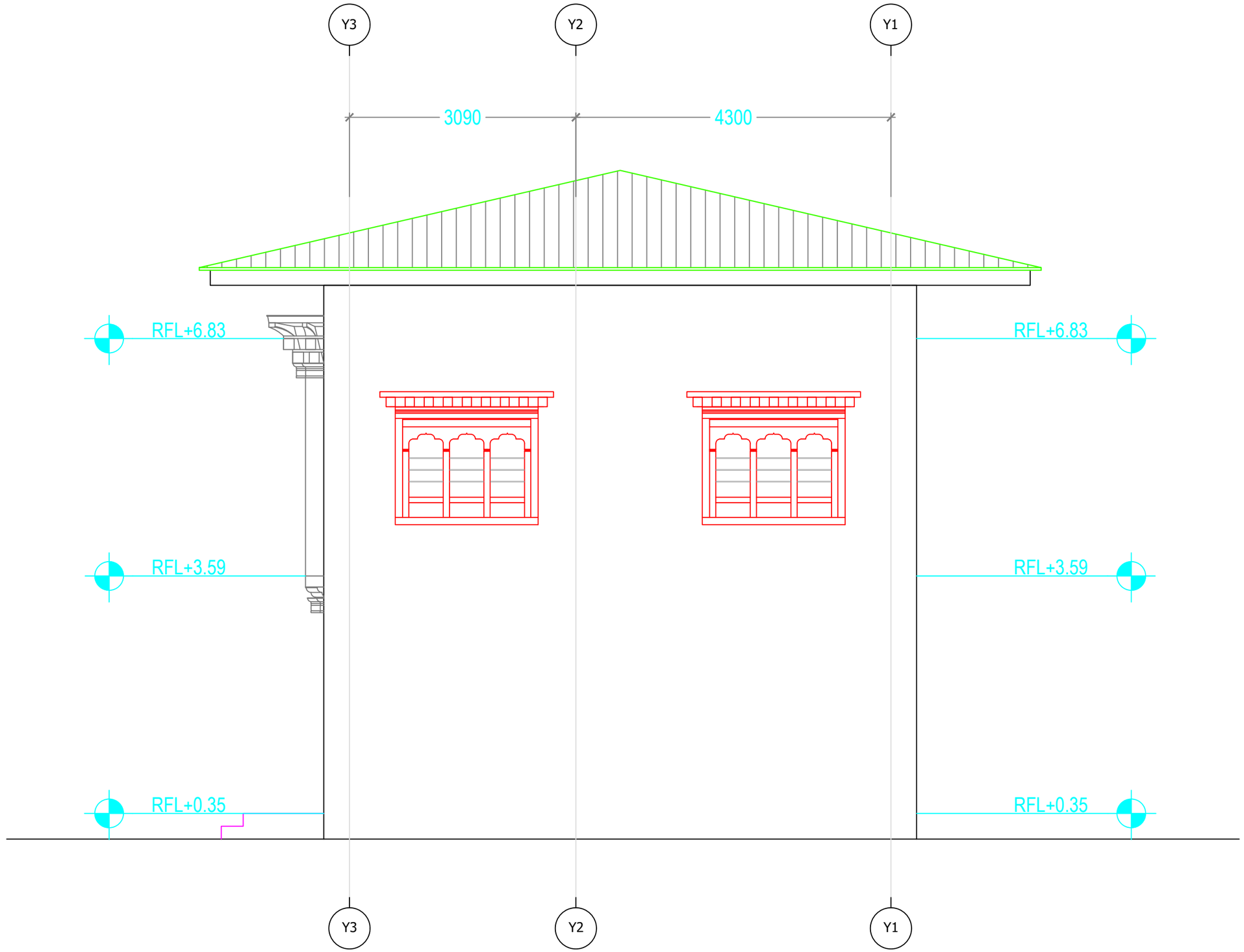

Khorlochhu

ARCHITECTURAL DRAWING

PROJECT TITLE	DRAWING TITLE
Construction of Doksum Primary School	LEFT_SIDE_ELEVATION

NOTES

1. ALL DIMENSIONS ARE IN MILLIMETER & ELEVATION IN METER UNLESS SPECIFIED OTHERWISE.
2. ALL DIMENSIONS MEASURE UNFINISHED SURFACES UNLESS SPECIFIED OTHERWISE.
3. DIMENSIONS ARE TO BE READ AND NOT SCALED OFF.
4. ANY DISCREPANCIES IN THE DRAWING ARE TO BE BROUGHT TO THE IMMEDIATE NOTICE OF THE SUPERVISION TEAM.

CHECKED	APPROVED	DATE	DRAWING NO.
			AR_07
		MARCH, 2026	SCALE
			NTS

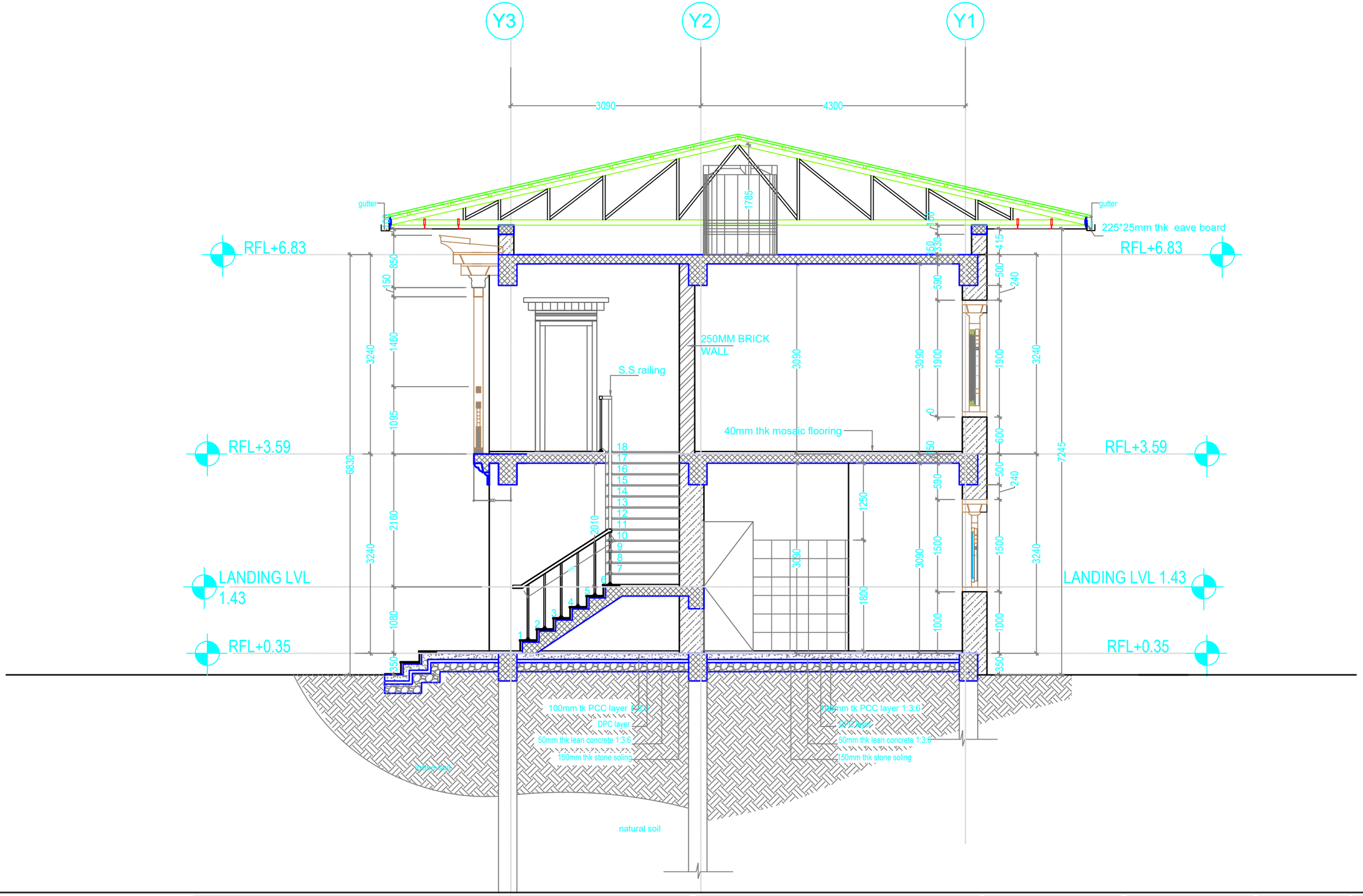

Khorlochhu

ARCHITECTURAL DRAWING

PROJECT TITLE	DRAWING TITLE
Construction of Doksum Primary School	SECTIONAL_DETAILS

NOTES

1. ALL DIMENSIONS ARE IN MILLIMETER & ELEVATION IN METER UNLESS SPECIFIED OTHERWISE.
2. ALL DIMENSIONS MEASURE UNFINISHED SURFACES UNLESS SPECIFIED OTHERWISE.
3. DIMENSIONS ARE TO BE READ AND NOT SCALED OFF.
4. ANY DISCREPANCIES IN THE DRAWING ARE TO BE BROUGHT TO THE IMMEDIATE NOTICE OF THE SUPERVISION TEAM.

CHECKED	APPROVED	DATE	DRAWING NO.
			AR_08
		MARCH, 2026	SCALE
			NTS

DOOR AND WINDOW DETAILS

ADMINISTRATION BLOCK

Owner - Khorlochhu Hydro Power Limited
Location - Doksum New Township, Trashiyangtse

Khorlochhu

R335

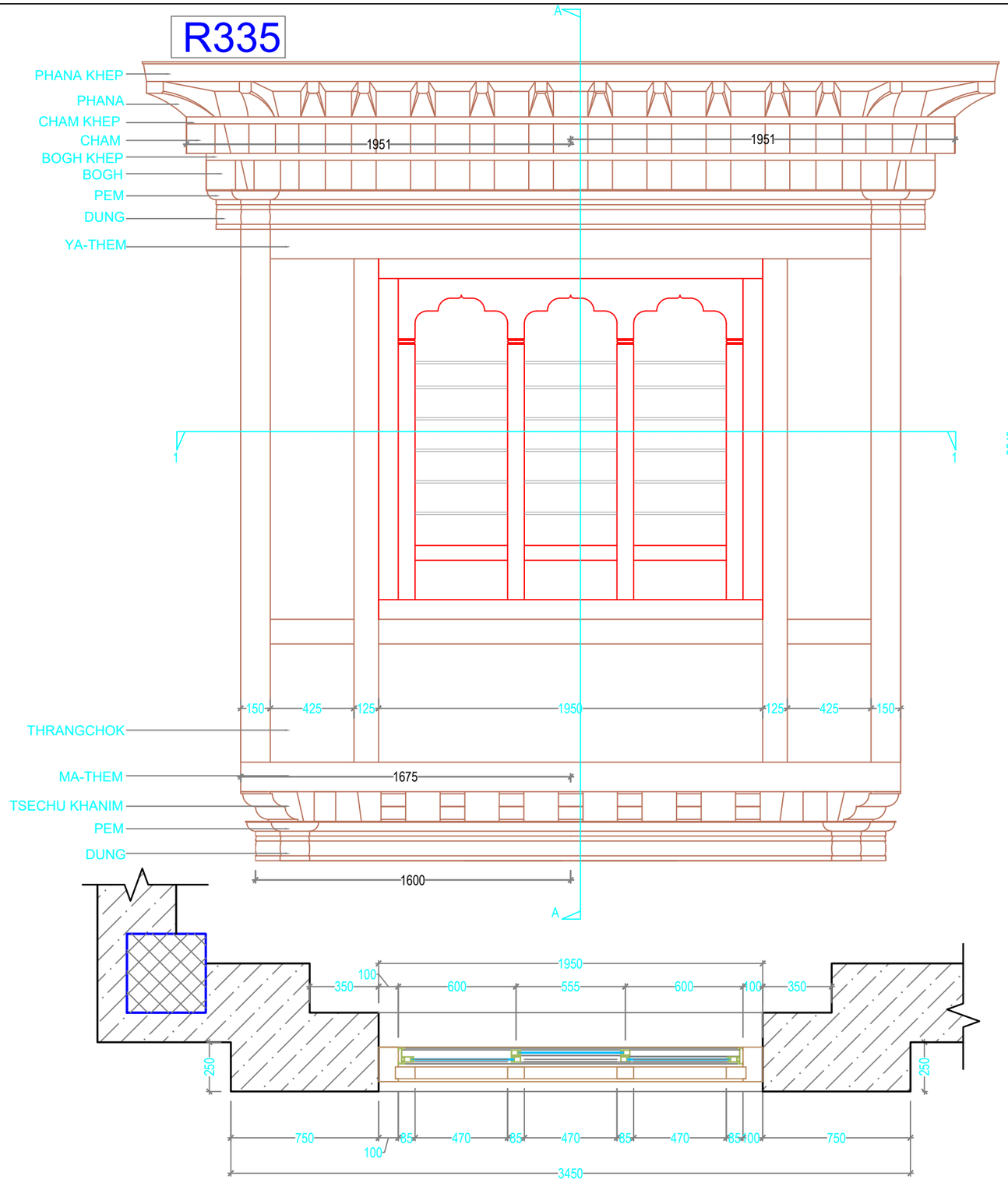

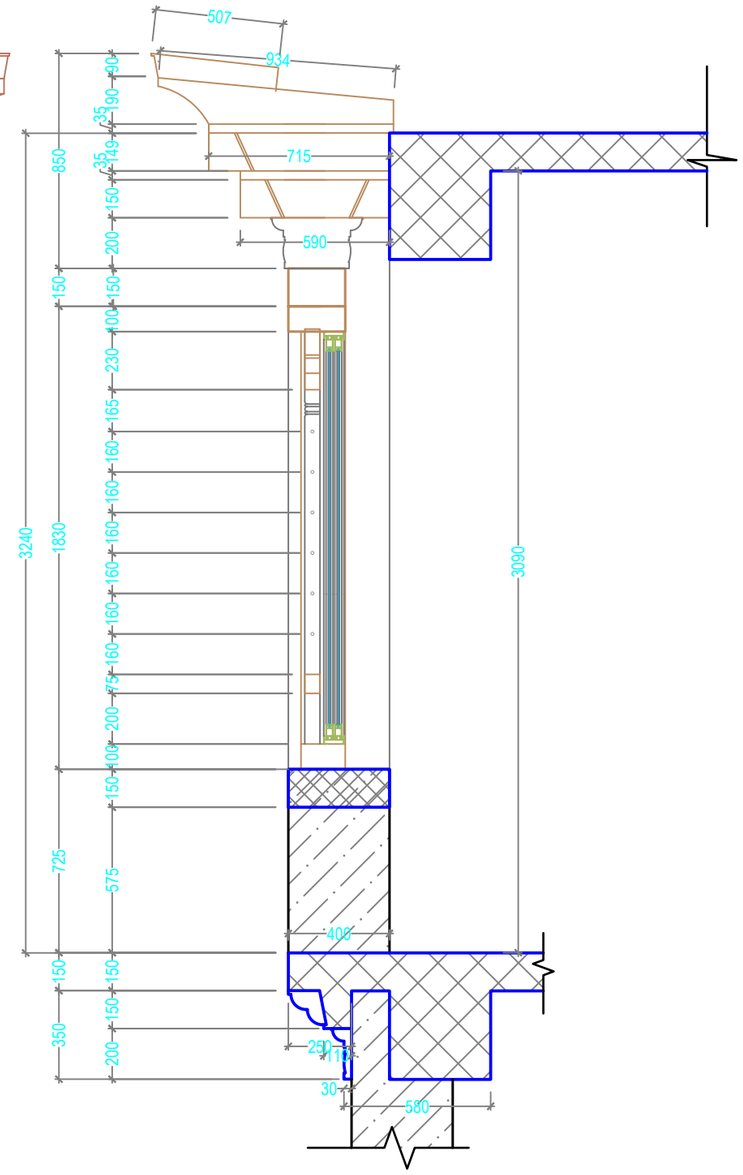

Khorlochhu	**ARCHITECTURAL DRAWING**	**NOTES**	**CHECKED**	**APPROVED**	**DATE**	**DRAWING NO.**
						AR_09
	PROJECT TITLE	**DRAWING TITLE**				**SCALE**
	Construction of Doksum Primary School	**RABSEY_DETAILS**			MARCH, 2026	NTS

1. ALL DIMENSIONS ARE IN MILLIMETER & ELEVATION IN METER UNLESS SPECIFIED OTHERWISE.
2. ALL DIMENSIONS MEASURE UNFINISHED SURFACES UNLESS SPECIFIED OTHERWISE.
3. DIMENSIONS ARE TO BE READ AND NOT SCALED OFF.
4. ANY DISCREPANCIES IN THE DRAWING ARE TO BE BROUGHT TO THE IMMEDIATE NOTICE OF THE SUPERVISION TEAM.

R530

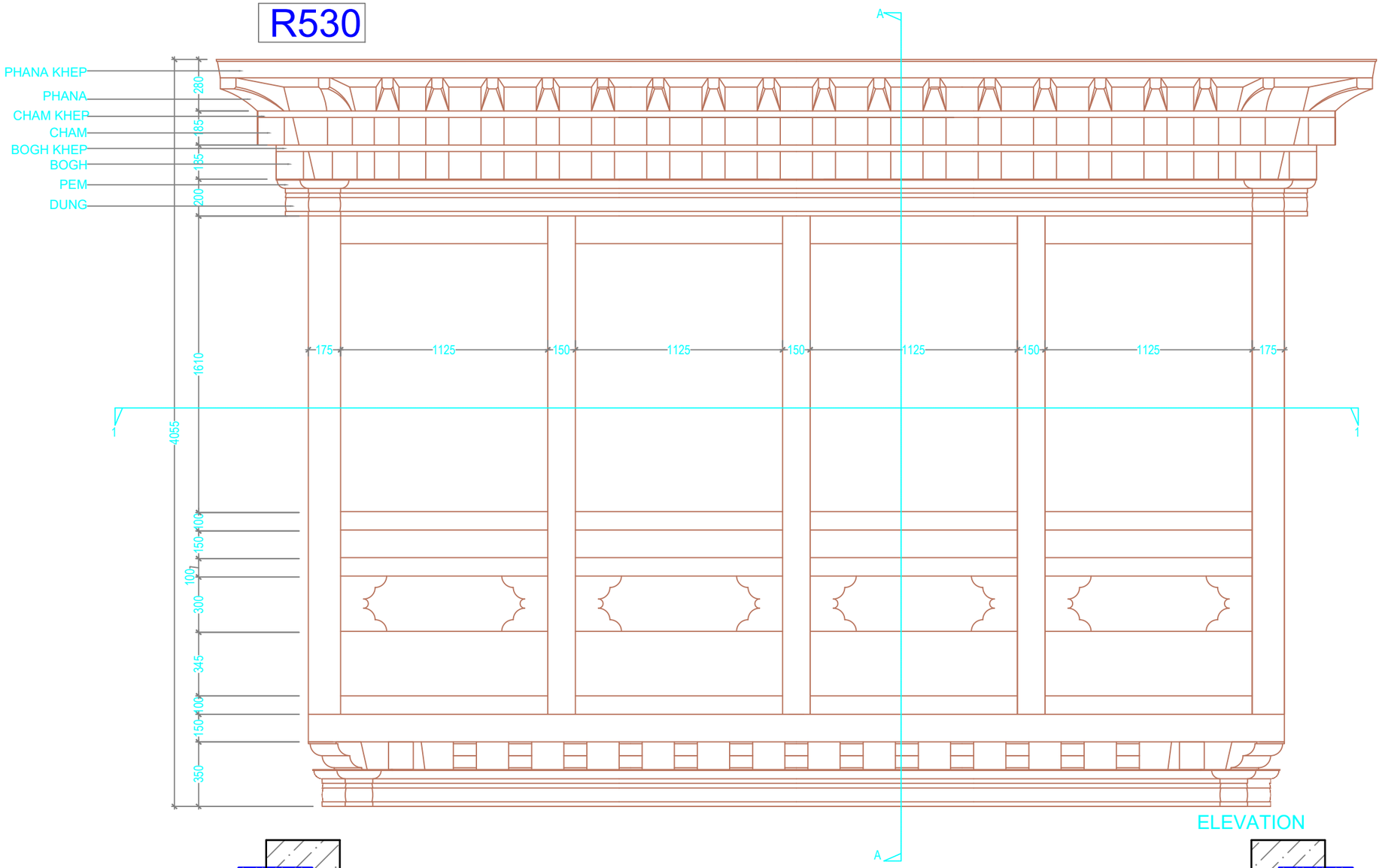

ELEVATION

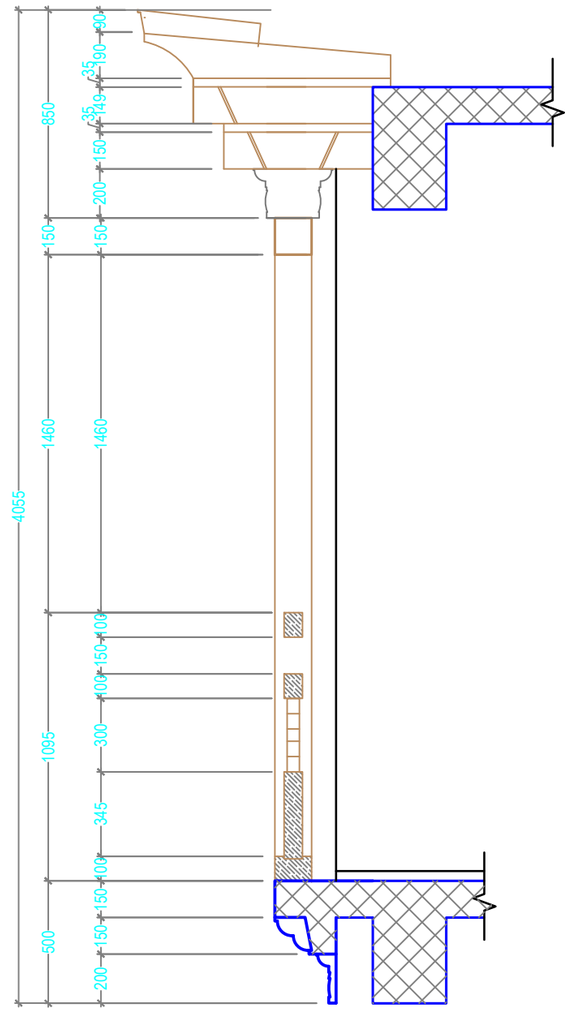

SECTION AT A-A

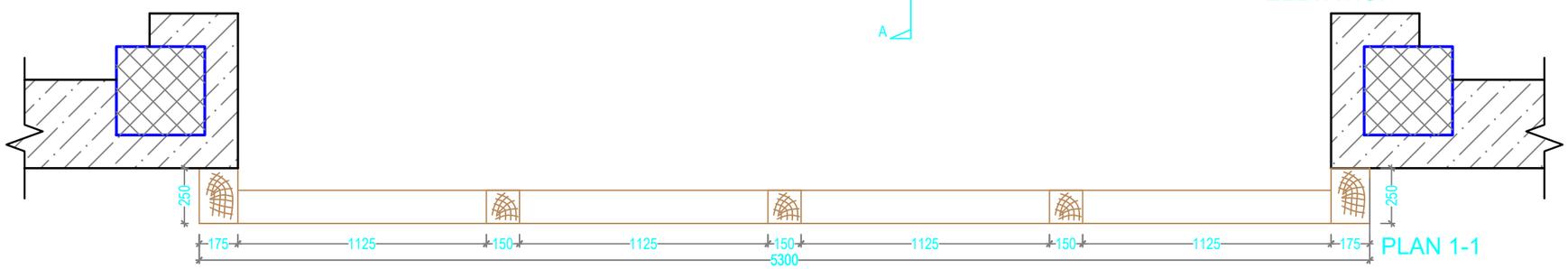

PLAN 1-1

Khorlochhu	**ARCHITECTURAL DRAWING**	**NOTES**	**CHECKED**	**APPROVED**	**DATE**	**DRAWING NO.**
	PROJECT TITLE	**DRAWING TITLE**				**AR_10**
	Construction of Doksum Primary School	**RABSEY_DETAILS**			MARCH, 2026	**SCALE**
						NTS

1. ALL DIMENSIONS ARE IN MILLIMETER & ELEVATION IN METER UNLESS SPECIFIED OTHERWISE.
2. ALL DIMENSIONS MEASURE UNFINISHED SURFACES UNLESS SPECIFIED OTHERWISE.
3. DIMENSIONS ARE TO BE READ AND NOT SCALED OFF.
4. ANY DISCREPANCIES IN THE DRAWING ARE TO BE BROUGHT TO THE IMMEDIATE NOTICE OF THE SUPERVISION TEAM.

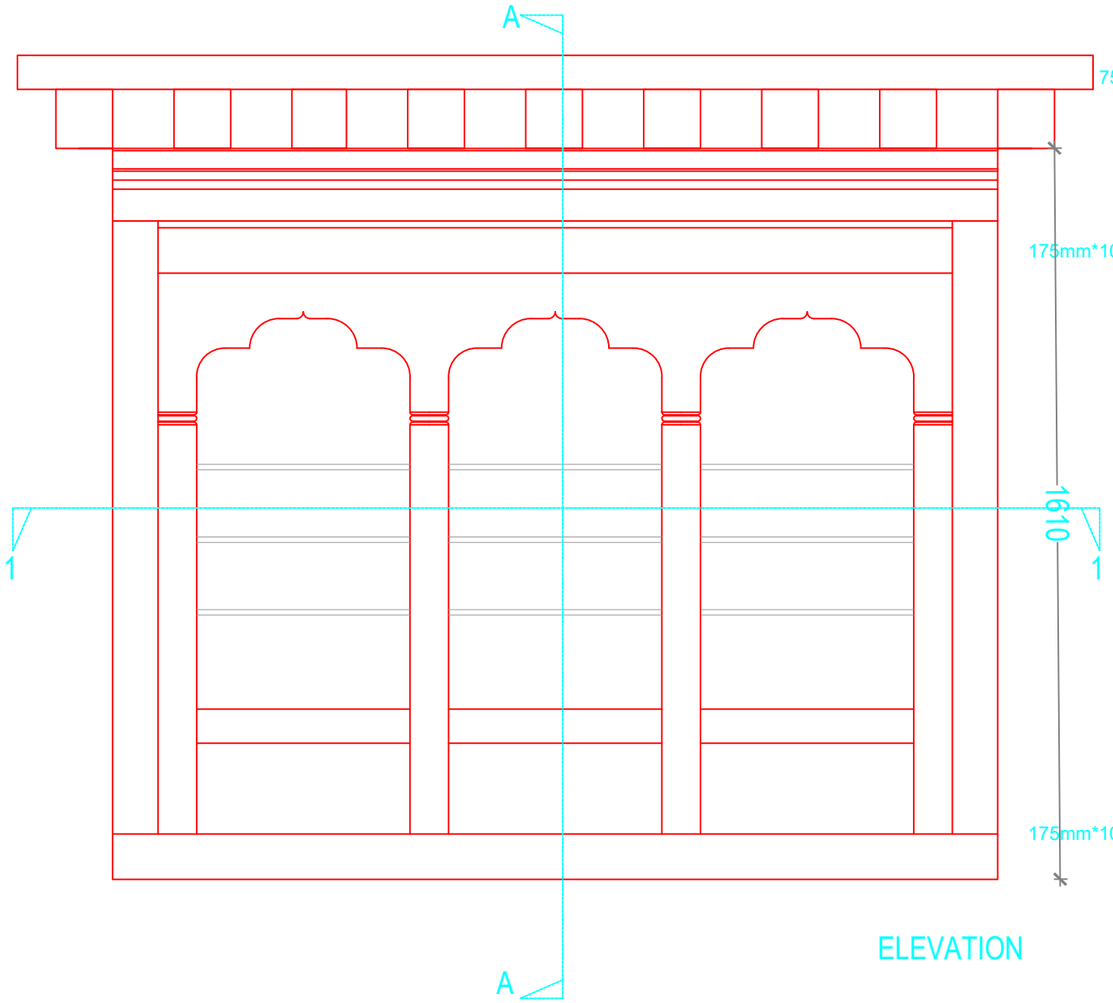

ELEVATION

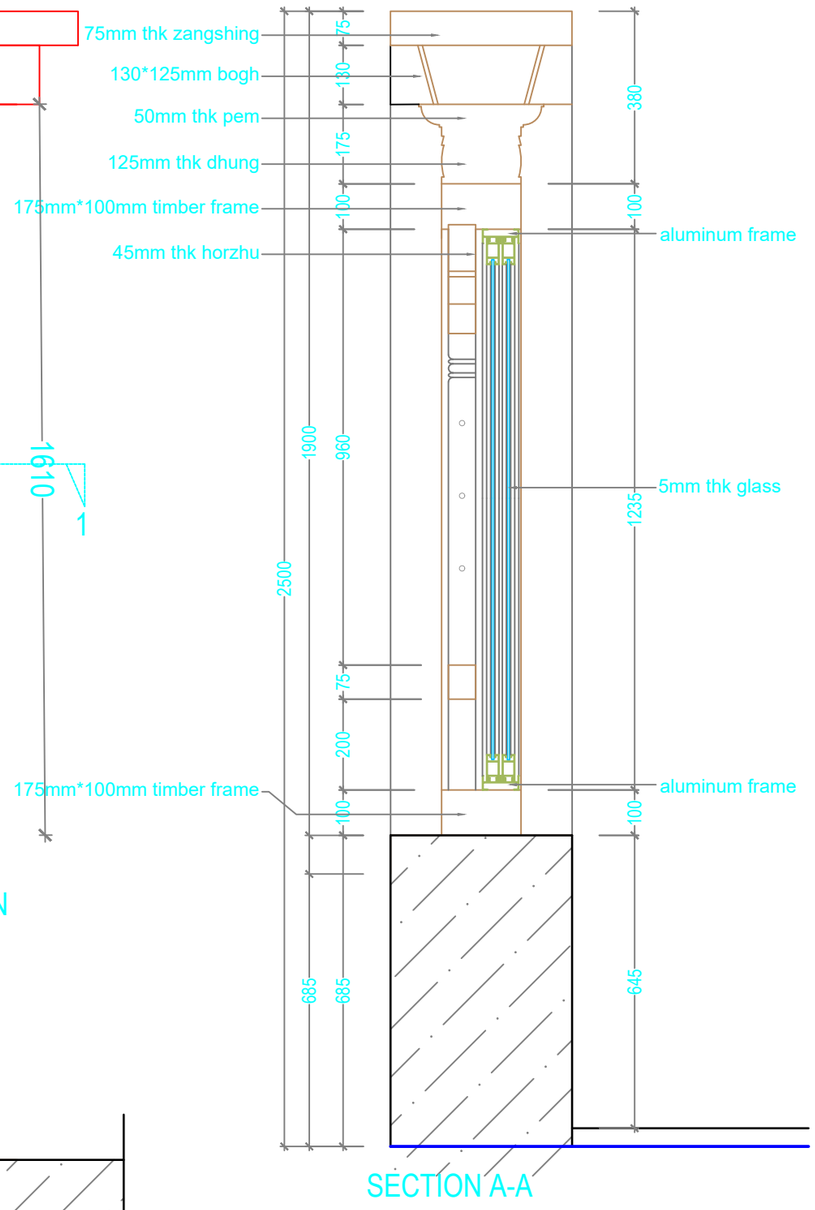

SECTION A-A

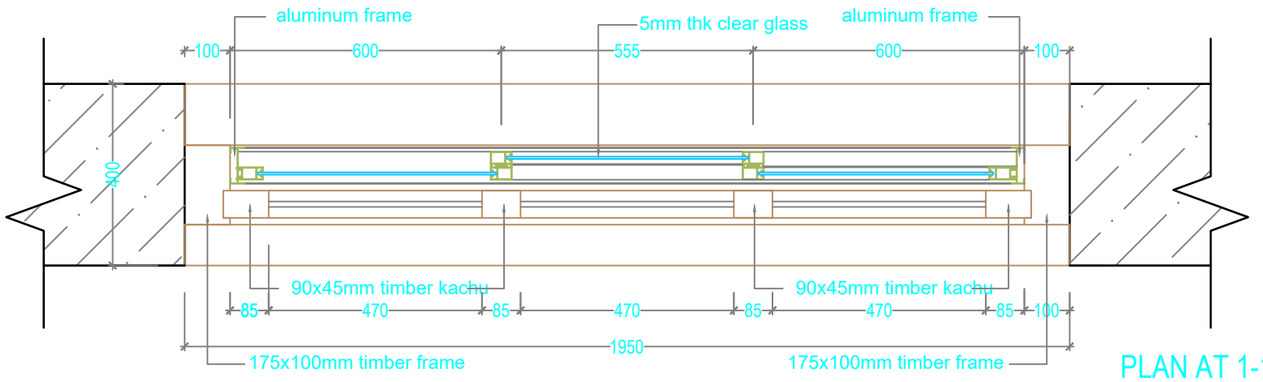

PLAN AT 1-1

Khorlochhu

ARCHITECTURAL DRAWING

PROJECT TITLE	DRAWING TITLE
Construction of Doksum Primary School	WINDOW_DETAILS

NOTES

1. ALL DIMENSIONS ARE IN MILLIMETER & ELEVATION IN METER UNLESS SPECIFIED OTHERWISE.
2. ALL DIMENSIONS MEASURE UNFINISHED SURFACES UNLESS SPECIFIED OTHERWISE.
3. DIMENSIONS ARE TO BE READ AND NOT SCALED OFF.
4. ANY DISCREPANCIES IN THE DRAWING ARE TO BE BROUGHT TO THE IMMEDIATE NOTICE OF THE SUPERVISION TEAM.

CHECKED	APPROVED	DATE	DRAWING NO.
			AR_11
		MARCH, 2026	SCALE
			NTS

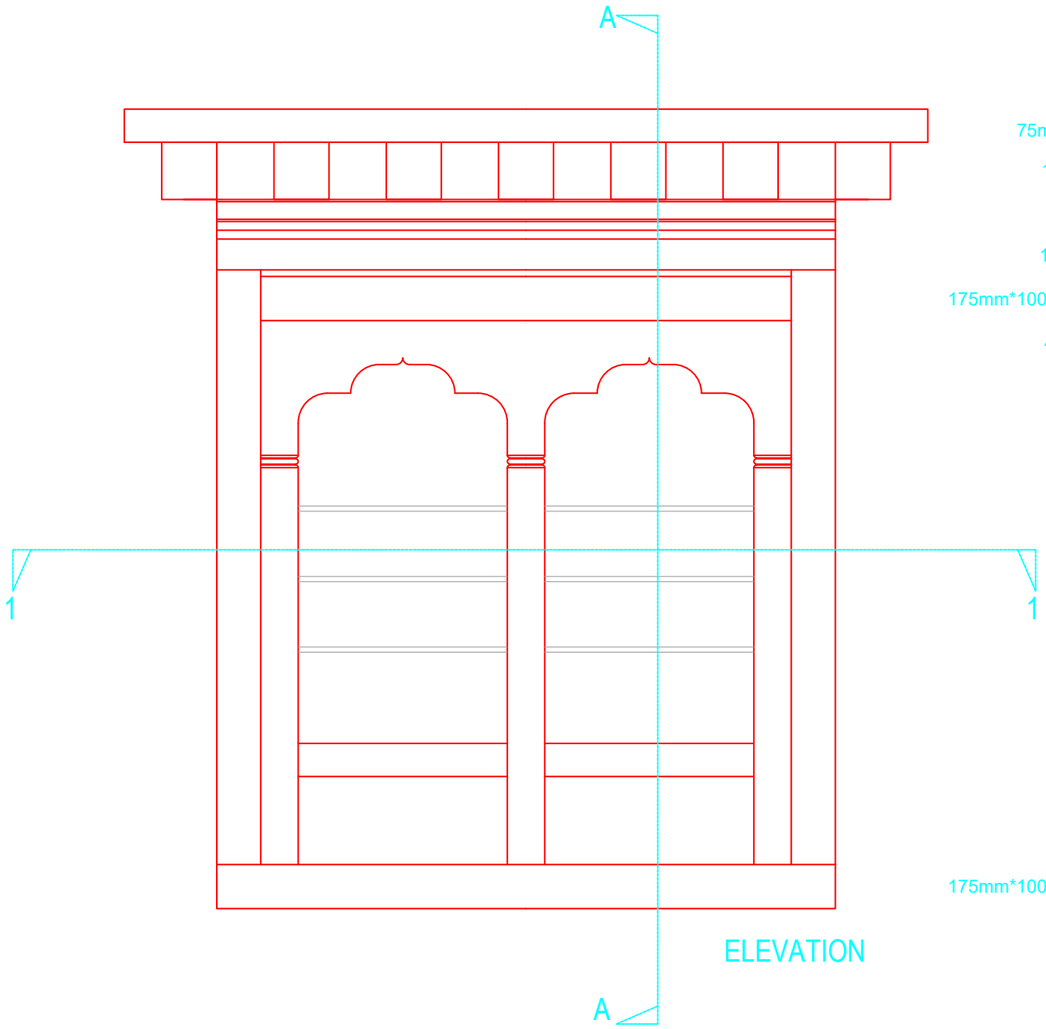

ELEVATION

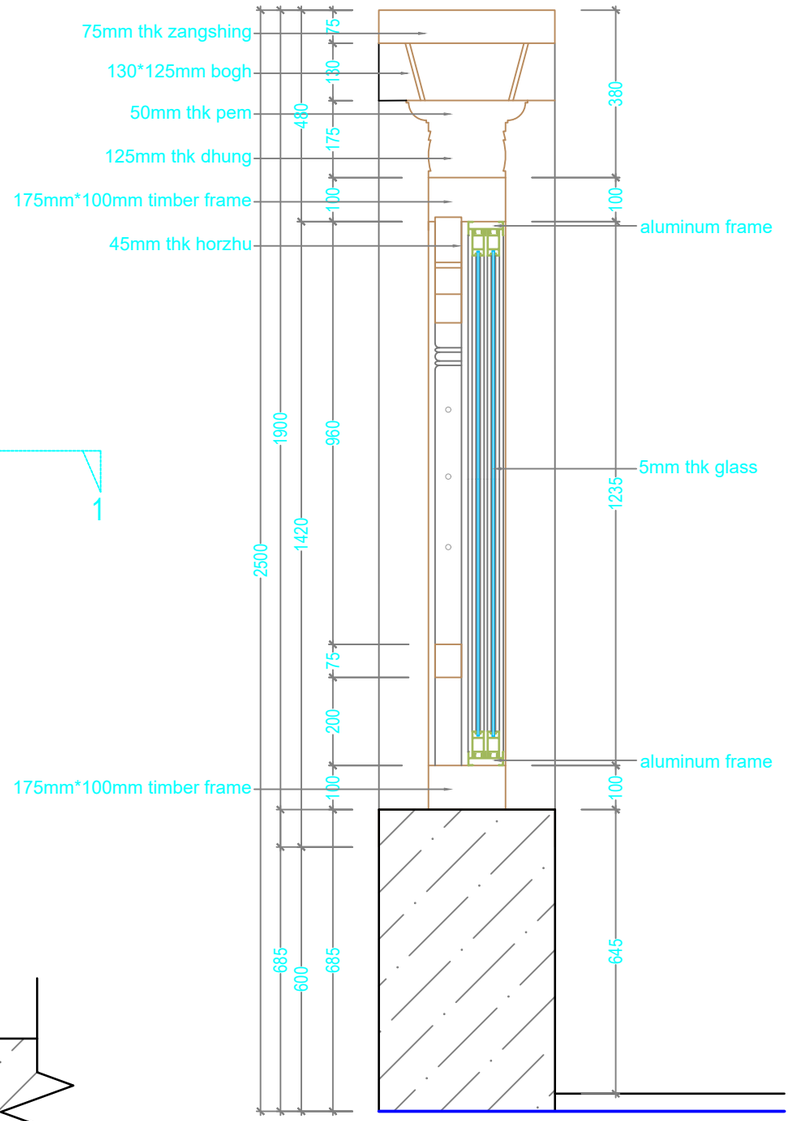

SECTION A-A

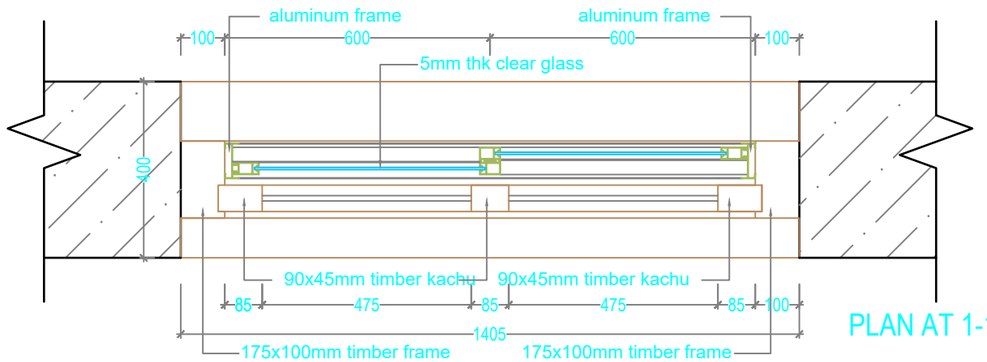

PLAN AT 1-1

Khorlochhu

ARCHITECTURAL DRAWING

PROJECT TITLE	DRAWING TITLE
Construction of Doksum Primary School	WINDOW_DETAILS

NOTES

1. ALL DIMENSIONS ARE IN MILLIMETER & ELEVATION IN METER UNLESS SPECIFIED OTHERWISE.
2. ALL DIMENSIONS MEASURE UNFINISHED SURFACES UNLESS SPECIFIED OTHERWISE.
3. DIMENSIONS ARE TO BE READ AND NOT SCALED OFF.
4. ANY DISCREPANCIES IN THE DRAWING ARE TO BE BROUGHT TO THE IMMEDIATE NOTICE OF THE SUPERVISION TEAM.

CHECKED	APPROVED	DATE	DRAWING NO.
			AR_12
		MARCH, 2026	SCALE
			NTS

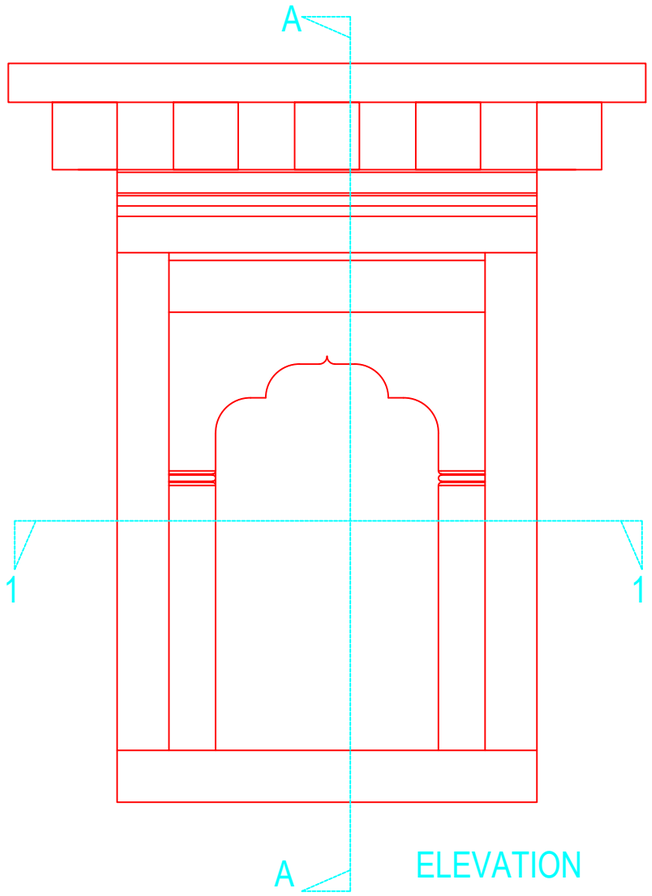

ELEVATION

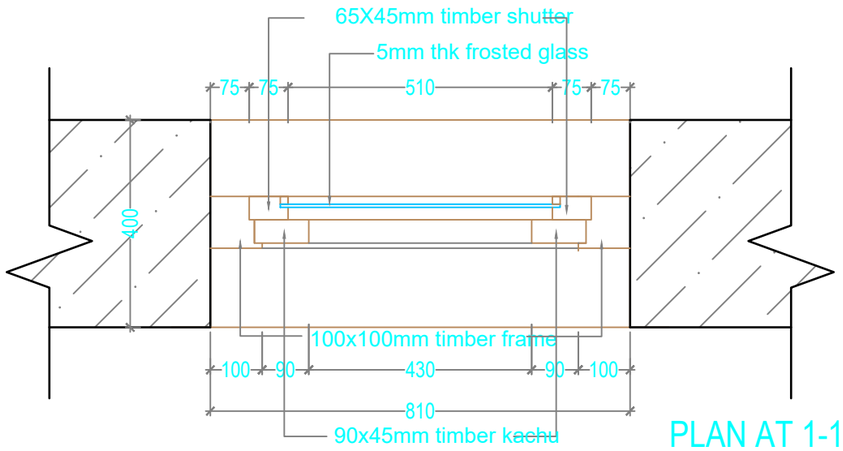

PLAN AT 1-1

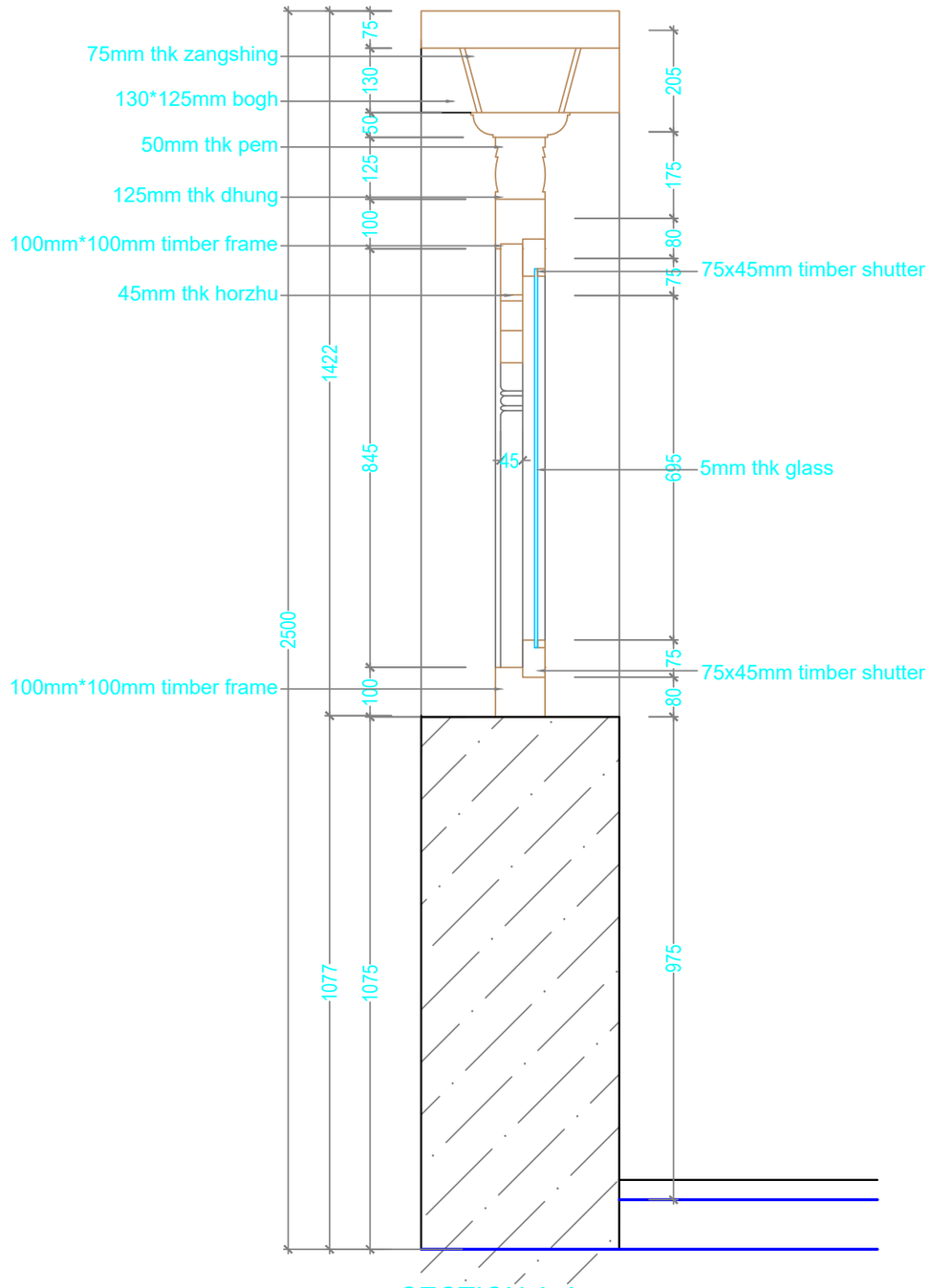

SECTION A-A

Khorlochhu

ARCHITECTURAL DRAWING

PROJECT TITLE	DRAWING TITLE
Construction of Doksum Primary School	WINDOW_DETAILS

NOTES

1. ALL DIMENSIONS ARE IN MILLIMETER & ELEVATION IN METER UNLESS SPECIFIED OTHERWISE.
2. ALL DIMENSIONS MEASURE UNFINISHED SURFACES UNLESS SPECIFIED OTHERWISE.
3. DIMENSIONS ARE TO BE READ AND NOT SCALED OFF.
4. ANY DISCREPANCIES IN THE DRAWING ARE TO BE BROUGHT TO THE IMMEDIATE NOTICE OF THE SUPERVISION TEAM.

CHECKED	APPROVED	DATE	DRAWING NO.
			AR_13
		MARCH, 2026	SCALE
			NTS

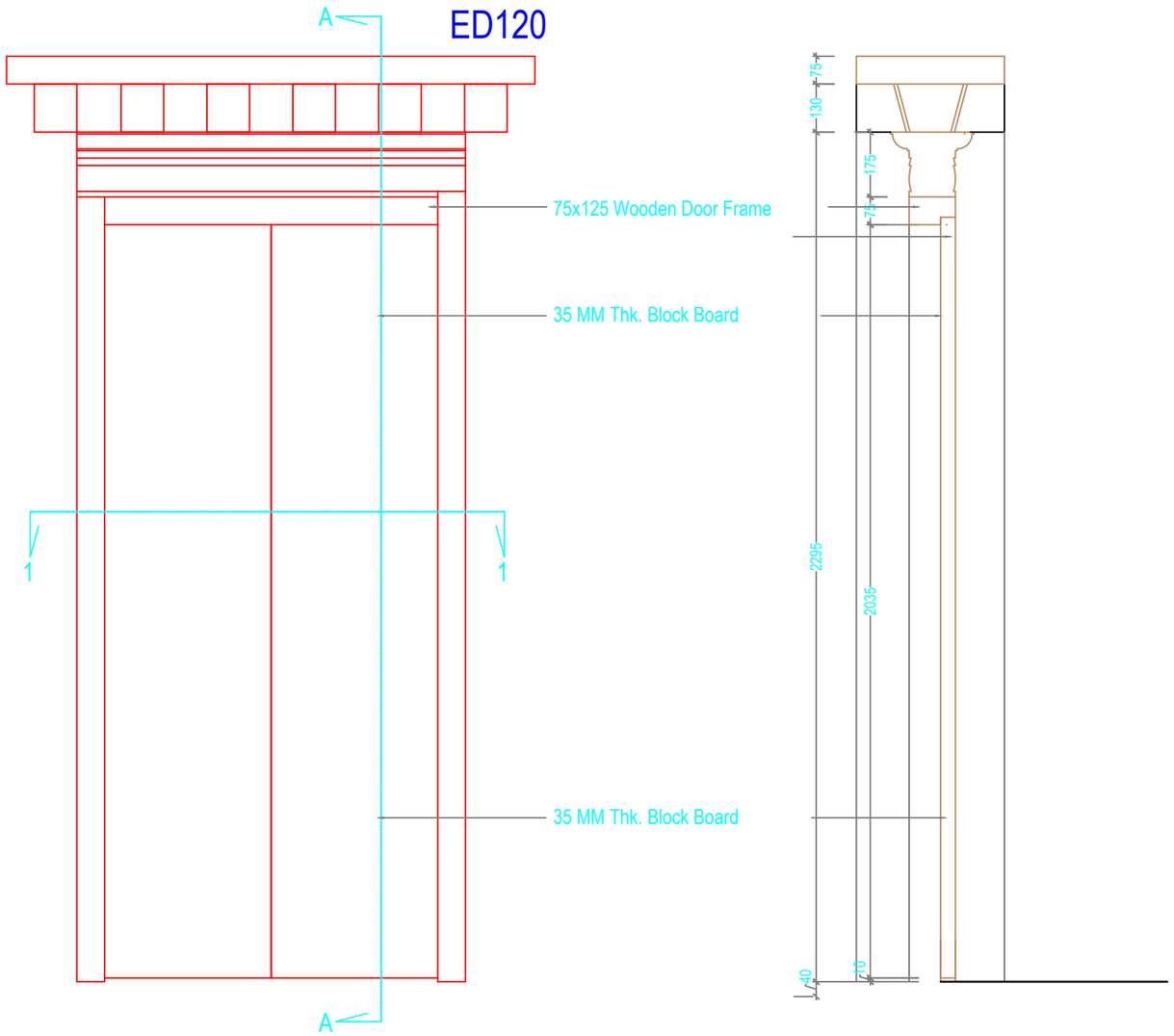

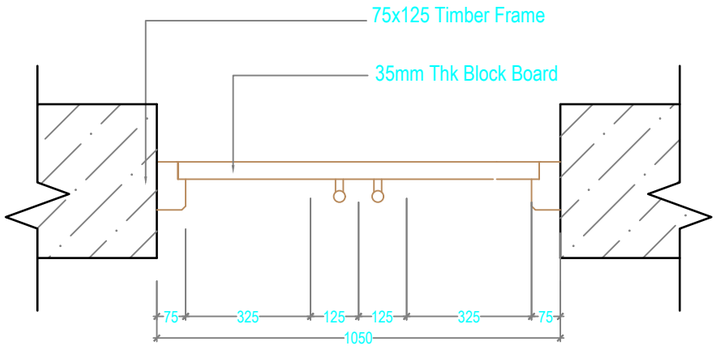

PLAN AT 1-1

Khorlochhu

ARCHITECTURAL DRAWING

PROJECT TITLE	DRAWING TITLE
Construction of Doksum Primary School	DOOR_DETAILS

NOTES

1. ALL DIMENSIONS ARE IN MILLIMETER & ELEVATION IN METER UNLESS SPECIFIED OTHERWISE.
2. ALL DIMENSIONS MEASURE UNFINISHED SURFACES UNLESS SPECIFIED OTHERWISE.
3. DIMENSIONS ARE TO BE READ AND NOT SCALED OFF.
4. ANY DISCREPANCIES IN THE DRAWING ARE TO BE BROUGHT TO THE IMMEDIATE NOTICE OF THE SUPERVISION TEAM.

CHECKED	APPROVED	DATE	DRAWING NO.
			AR_14
		MARCH, 2026	SCALE
			NTS

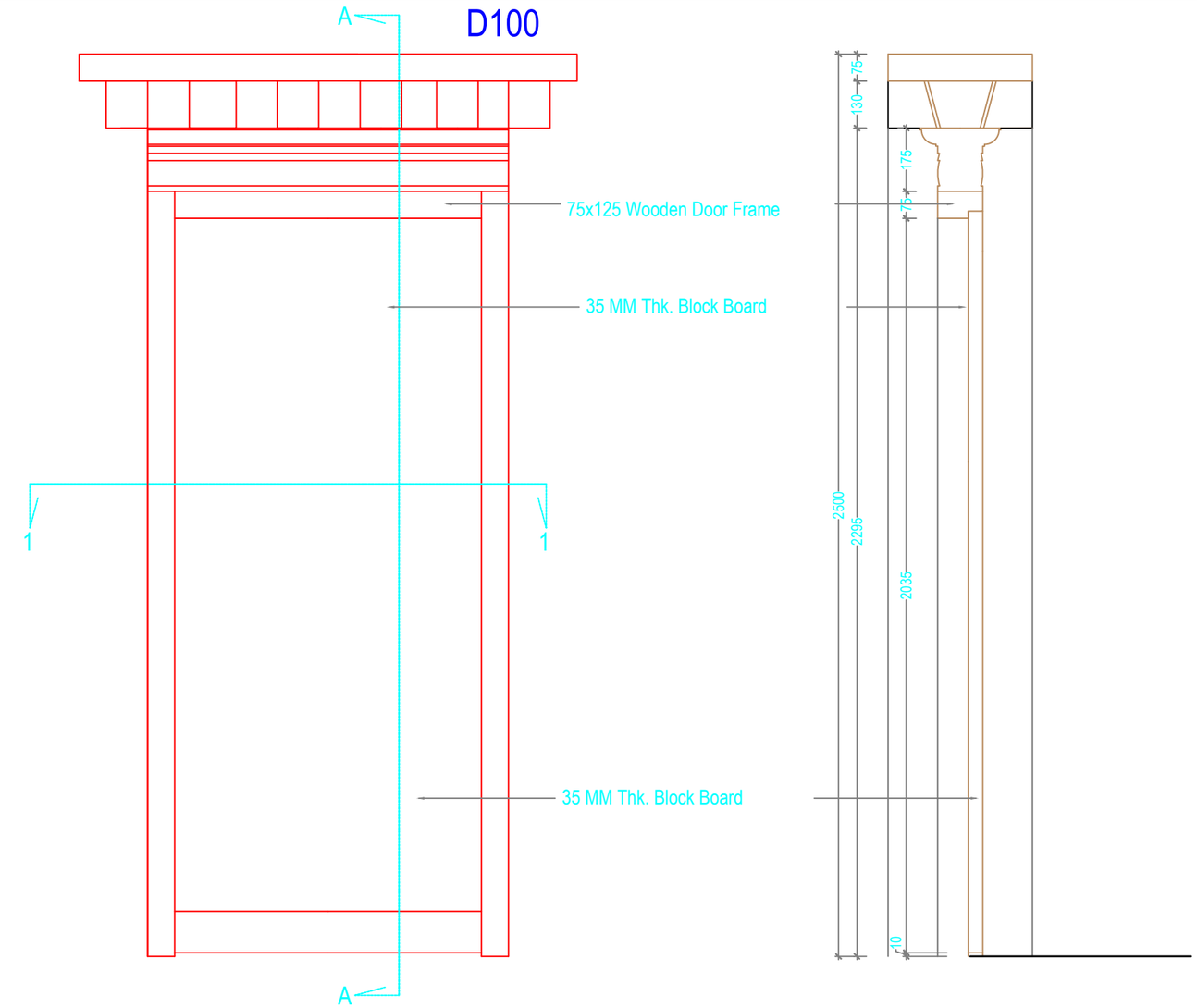

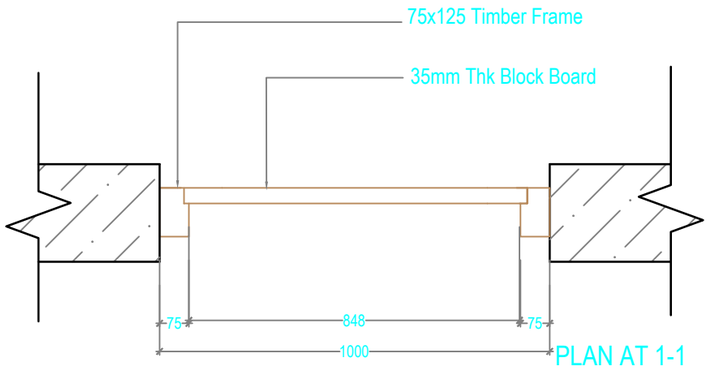

PLAN AT 1-1

Khorlochhu

ARCHITECTURAL DRAWING

PROJECT TITLE	DRAWING TITLE
Construction of Doksum Primary School	DOOR_DETAILS

NOTES

1. ALL DIMENSIONS ARE IN MILLIMETER & ELEVATION IN METER UNLESS SPECIFIED OTHERWISE.
2. ALL DIMENSIONS MEASURE UNFINISHED SURFACES UNLESS SPECIFIED OTHERWISE.
3. DIMENSIONS ARE TO BE READ AND NOT SCALED OFF.
4. ANY DISCREPANCIES IN THE DRAWING ARE TO BE BROUGHT TO THE IMMEDIATE NOTICE OF THE SUPERVISION TEAM.

CHECKED	APPROVED	DATE	DRAWING NO.
			AR_15
		MARCH, 2026	SCALE
			NTS

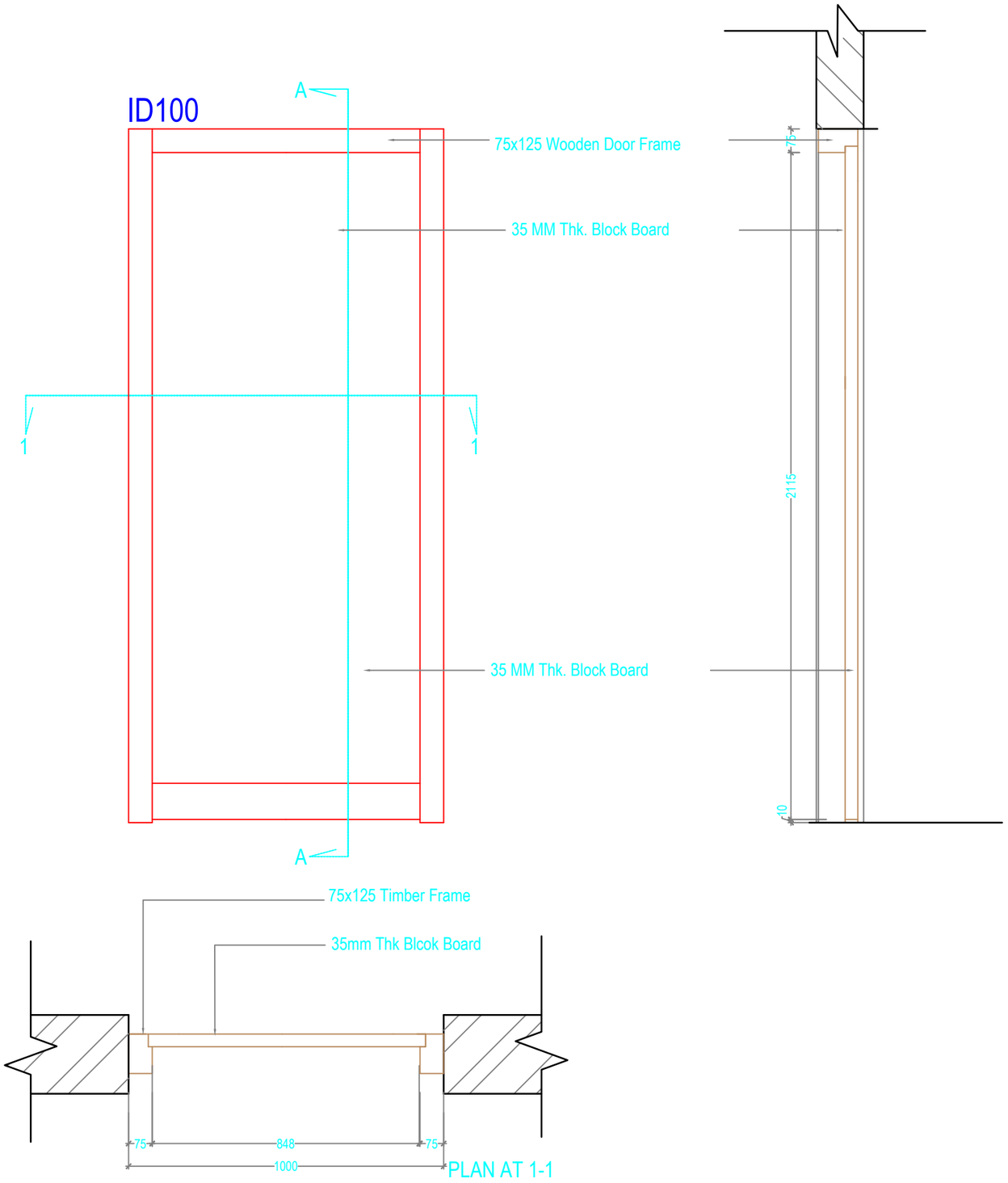

Khorlochhu

ARCHITECTURAL DRAWING

PROJECT TITLE	DRAWING TITLE
Construction of Doksum Primary School	DOOR_DETAILS

NOTES

1. ALL DIMENSIONS ARE IN MILLIMETER & ELEVATION IN METER UNLESS SPECIFIED OTHERWISE.
2. ALL DIMENSIONS MEASURE UNFINISHED SURFACES UNLESS SPECIFIED OTHERWISE.
3. DIMENSIONS ARE TO BE READ AND NOT SCALED OFF.
4. ANY DISCREPANCIES IN THE DRAWING ARE TO BE BROUGHT TO THE IMMEDIATE NOTICE OF THE SUPERVISION TEAM.

CHECKED	APPROVED	DATE	DRAWING NO.
			AR_16
		MARCH, 2026	SCALE
			NTS

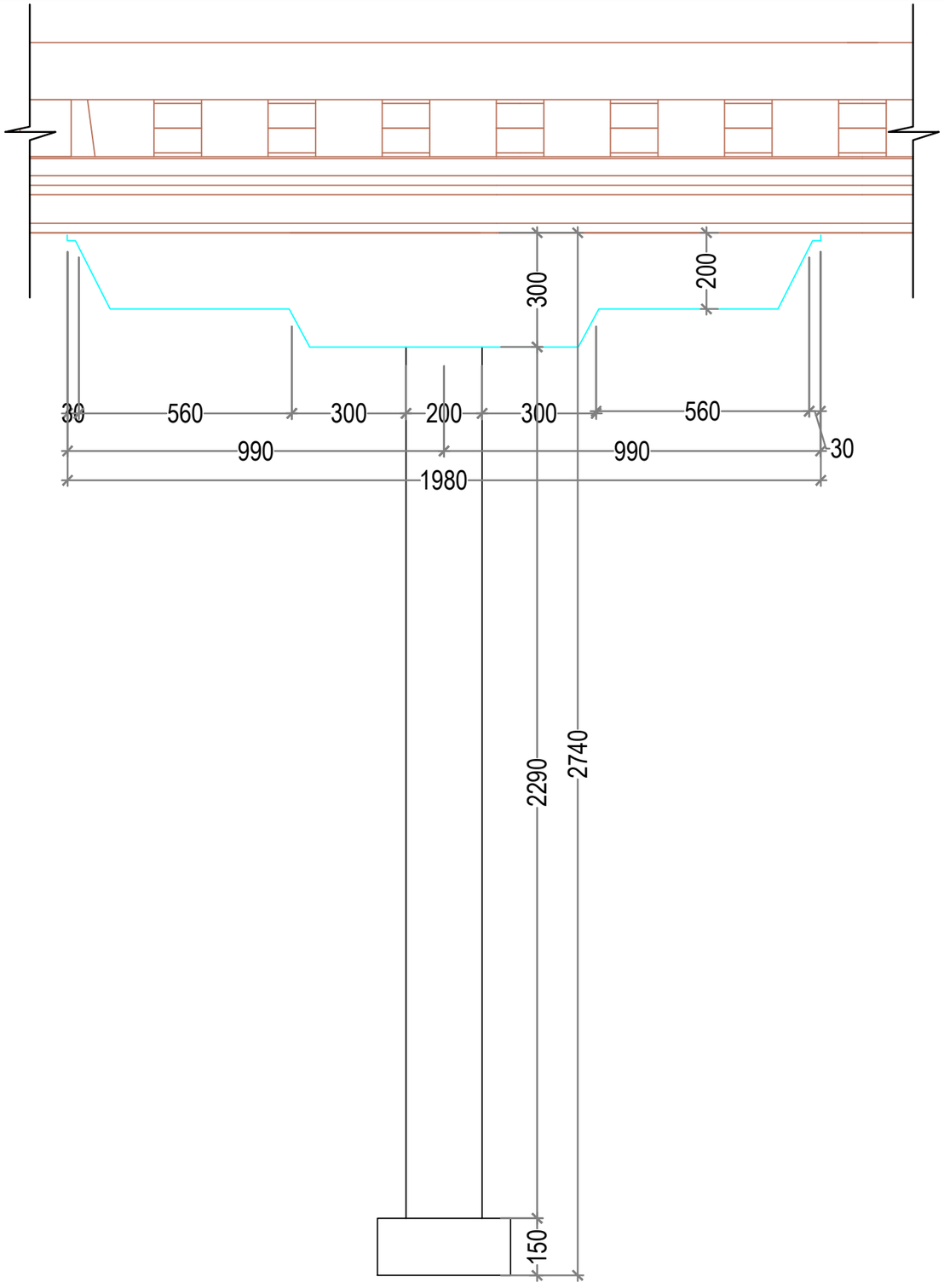

ARCHITECTURAL DRAWING

PROJECT TITLE	DRAWING TITLE
Construction of Doksum Primary School	KACHEN_DETAILS

NOTES

1. ALL DIMENSIONS ARE IN MILLIMETER & ELEVATION IN METER UNLESS SPECIFIED OTHERWISE.
2. ALL DIMENSIONS MEASURE UNFINISHED SURFACES UNLESS SPECIFIED OTHERWISE.
3. DIMENSIONS ARE TO BE READ AND NOT SCALED OFF.
4. ANY DISCREPANCIES IN THE DRAWING ARE TO BE BROUGHT TO THE IMMEDIATE NOTICE OF THE SUPERVISION TEAM.

CHECKED	APPROVED	DATE	DRAWING NO.
			AR_17
		MARCH, 2026	SCALE
			NTS

PLUMBING DRAWINGS

ADMINISTRATION BLOCK

Owner - Khorlochhu Hydro Power Limited
Location - Doksum New Township, Trashiyangtse

Khorlochhu

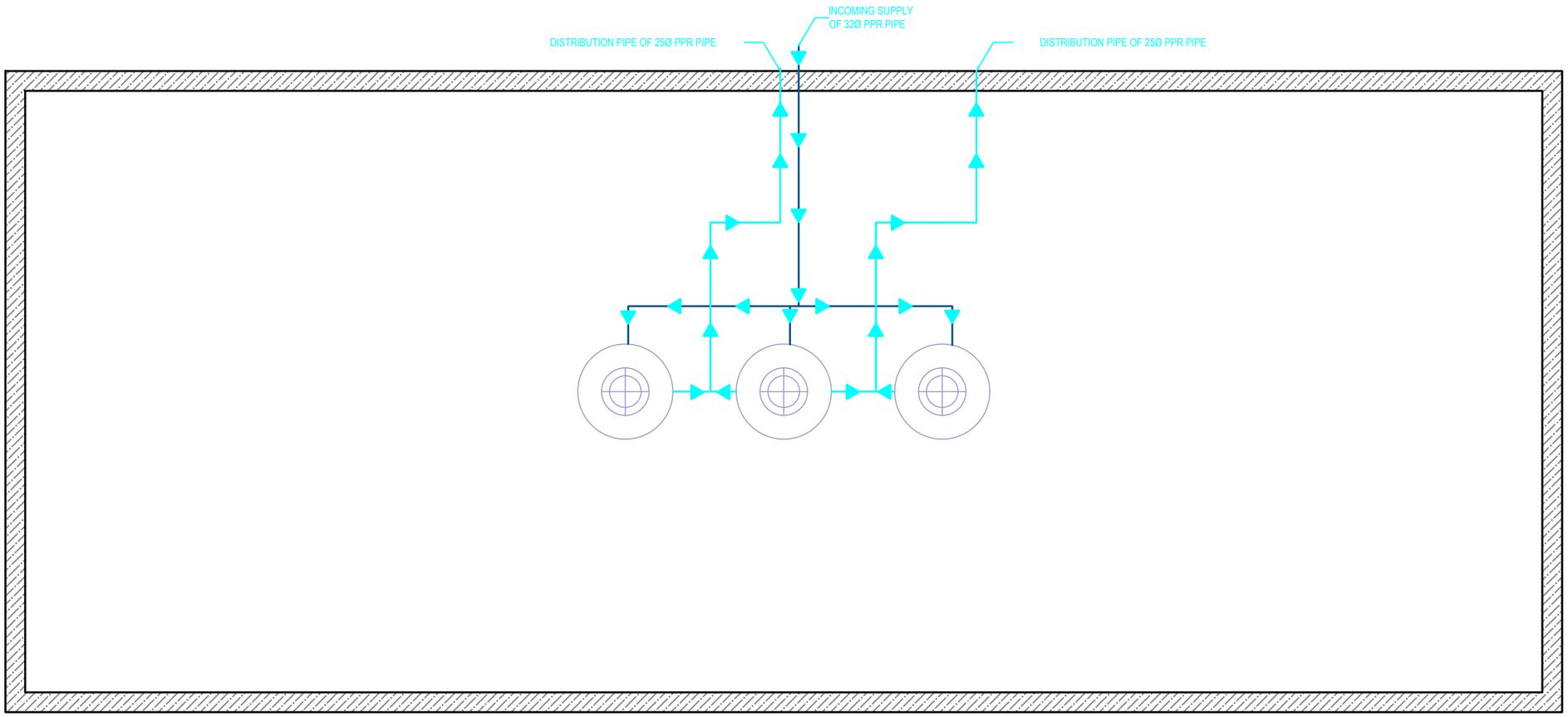

Khorlochhu

ARCHITECTURAL DRAWING

PROJECT TITLE	DRAWING TITLE
Construction of Doksum Primary School	WATER_SUPPLY_LAYOUT_PLAN

NOTES

1. ALL DIMENSIONS ARE IN MILLIMETER & ELEVATION IN METER UNLESS SPECIFIED OTHERWISE.
2. ALL DIMENSIONS MEASURE UNFINISHED SURFACES UNLESS SPECIFIED OTHERWISE.
3. DIMENSIONS ARE TO BE READ AND NOT SCALED OFF.
4. ANY DISCREPANCIES IN THE DRAWING ARE TO BE BROUGHT TO THE IMMEDIATE NOTICE OF THE SUPERVISION TEAM.

CHECKED	APPROVED	DATE	DRAWING NO.
			PB_01
		MARCH, 2026	SCALE
			NTS

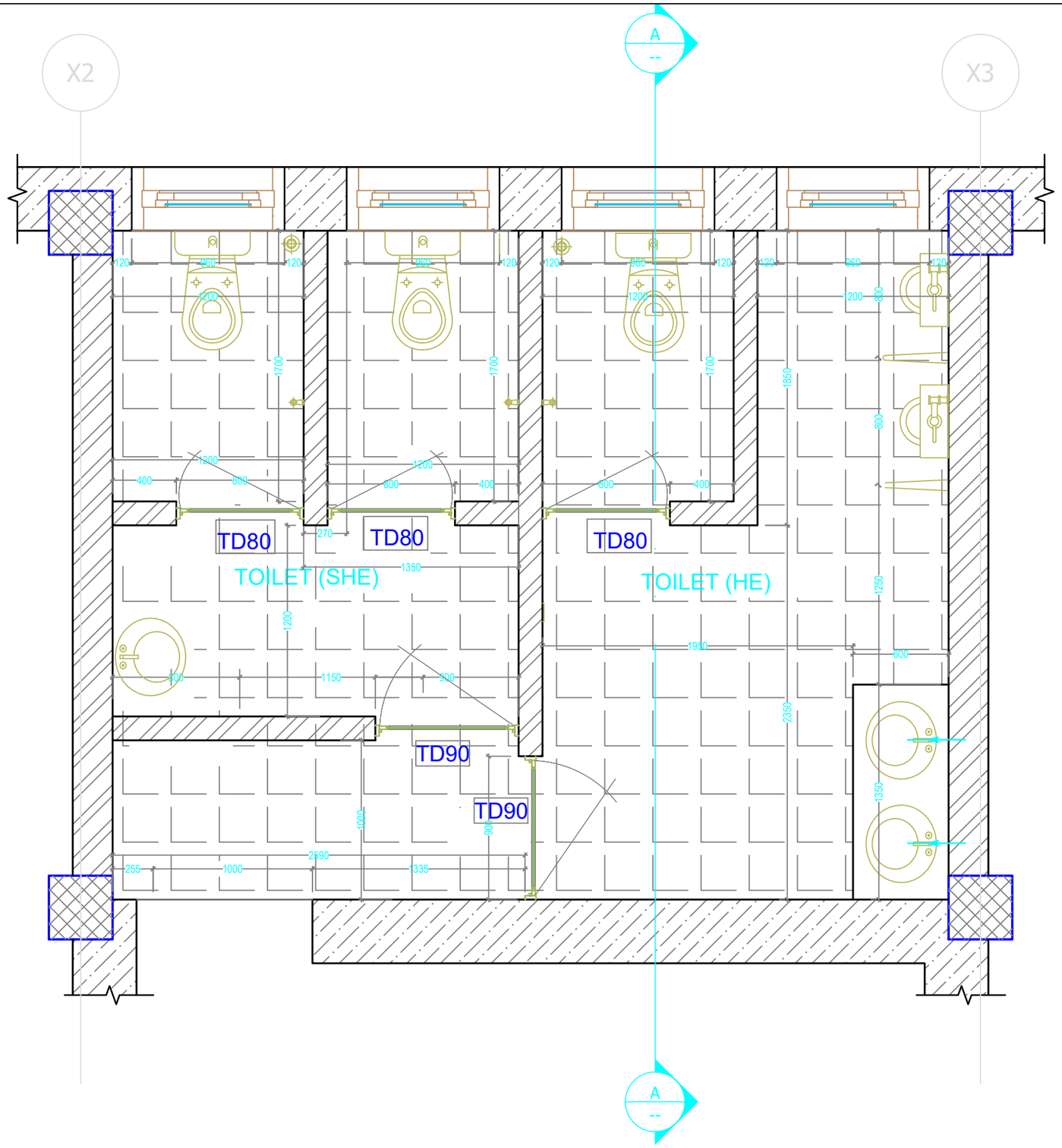

ARCHITECTURAL DRAWING

PROJECT TITLE	DRAWING TITLE
Construction of Doksum Primary School	TOILET_DETAILS

NOTES

1. ALL DIMENSIONS ARE IN MILLIMETER & ELEVATION IN METER UNLESS SPECIFIED OTHERWISE.
2. ALL DIMENSIONS MEASURE UNFINISHED SURFACES UNLESS SPECIFIED OTHERWISE.
3. DIMENSIONS ARE TO BE READ AND NOT SCALED OFF.
4. ANY DISCREPANCIES IN THE DRAWING ARE TO BE BROUGHT TO THE IMMEDIATE NOTICE OF THE SUPERVISION TEAM.

CHECKED	APPROVED	DATE	DRAWING NO.
			PB_02
		MARCH, 2026	SCALE
			NTS

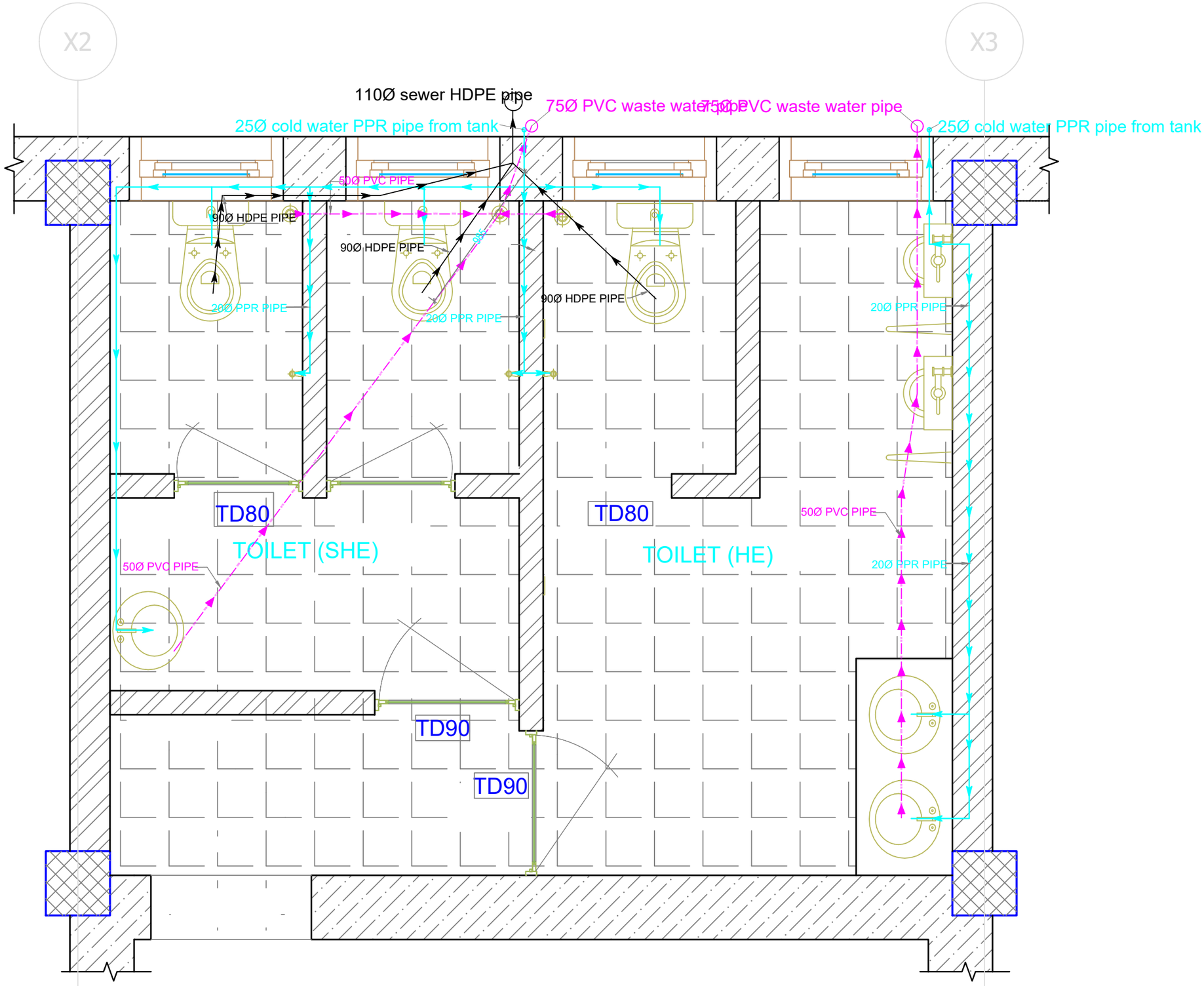

Khorlochhu

ARCHITECTURAL DRAWING

PROJECT TITLE	DRAWING TITLE
Construction of Doksum Primary School	WATER_SUPPLY_&_SEWERAGE_LAYOUT_PLAN

NOTES

1. ALL DIMENSIONS ARE IN MILLIMETER & ELEVATION IN METER UNLESS SPECIFIED OTHERWISE.
2. ALL DIMENSIONS MEASURE UNFINISHED SURFACES UNLESS SPECIFIED OTHERWISE.
3. DIMENSIONS ARE TO BE READ AND NOT SCALED OFF.
4. ANY DISCREPANCIES IN THE DRAWING ARE TO BE BROUGHT TO THE IMMEDIATE NOTICE OF THE SUPERVISION TEAM.

CHECKED	APPROVED	DATE	DRAWING NO.
			PB_03
		MARCH, 2026	SCALE
			NTS

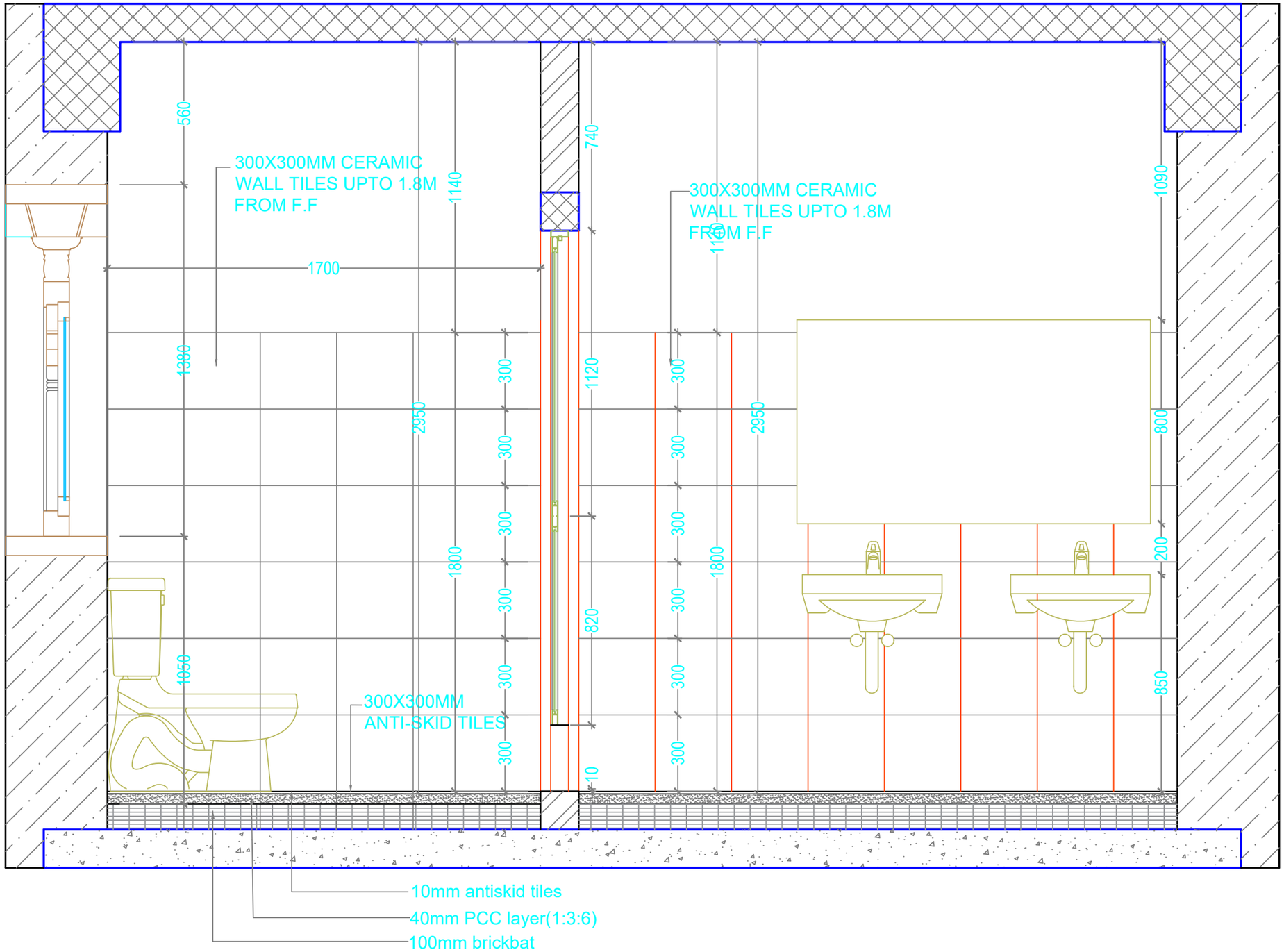

Khorlochhu

ARCHITECTURAL DRAWING

PROJECT TITLE	DRAWING TITLE
Construction of Doksum Primary School	TOILET_SECTIONAL_DETAIL

NOTES

1. ALL DIMENSIONS ARE IN MILLIMETER & ELEVATION IN METER UNLESS SPECIFIED OTHERWISE.
2. ALL DIMENSIONS MEASURE UNFINISHED SURFACES UNLESS SPECIFIED OTHERWISE.
3. DIMENSIONS ARE TO BE READ AND NOT SCALED OFF.
4. ANY DISCREPANCIES IN THE DRAWING ARE TO BE BROUGHT TO THE IMMEDIATE NOTICE OF THE SUPERVISION TEAM.

CHECKED	APPROVED	DATE	DRAWING NO.
			PB_04
		MARCH, 2026	SCALE
			NTS

STRUCTURAL DRAWINGS

ADMINISTRATION BLOCK

Owner - Khorlochhu Hydro Power Limited
Location - Doksum New Township, Trashiyangtse

Khorlochhu

GENERAL NOTES FOR STRUCTURAL DRAWINGS.

A. GENERAL

1. STRUCTURAL DRAWINGS SHALL BE READ IN CONJUNCTION WITH ARCHITECTURAL DRAWINGS AND OTHER ENGINEERS' DRAWINGS AND SPECIFICATIONS AND SUCH OTHER WRITTEN INSTRUCTIONS MAY BE ISSUED.
2. ALL DIMENSIONS ARE IN MM AND RELATIVE LEVEL IN M UNLESS STATED OTHERWISE.
3. DIMENSIONS SHALL NOT BE SCALED FROM THE DRAWINGS.
4. DESIGN CONFORMS TO:
   (a). IS 4326:1993 EARTHQUAKE RESISTANT DESIGN AND CONSTRUCTION OF BUILDINGS.
   (b). IS 456:2000 CODE OF PRACTICE FOR PLAIN & REINFORCED CONCRETE.
   (c). IS13930:1993 DUCTILE DETAILING OF REINFORCED CONCRETE STRUCTURES SUBJECTED TO SEISMIC FORES.
   (d).BUILDING CODE OF BHUTAN 2003
   (e). IS1893:2002 SEISMIC RESISTANT DESIGN OF STRUCTURES.
   (f). IS 800, SP 38 (S&T)-1987
5. VERIFY ALL SETTING OUT DIMENSIONS WITH ENGINEER/ARCHITECT.
6. REFER ANY DISCREPANCY TO ENGINEER/ARCHITECT BEFORE PROCEEDING THE WORK.
7. ALL CONSTRUCTION MATERIALSANDWORKMANSHIP SHALL COMPLY WITH THE SPECIFICATIONS FOR BUILDING AND ROAD WORKS TOGETHER WITH THE REQUIREMENTS OF ALL RELEVANT CODES OF PRACTICE REFERRED TO HEREIN AND THE REQUIREMENTS OF ALL STATUTORY AUTHORITIES.
8. ALWAYS REFER ADDITIONAL NOTES PROVIDED IN THE DRAWINGS.

B. FOUNDATIONS AND FOOTINGS.

1. FOOTINGS ARE DESIGNED FOR AN ALLOWABLE BEARING CAPACITY OF 180 KN/Sq M. VERIFY THE SOIL STRENGTH AND OBTAIN APPROVAL FROM THE ENGINEER BEFORE PLACING THE CONCRETE.
2. WALLS SHALL BE PROVIDED BELOW THE EXTERIOR PLINTH BEAM. IT IS RECOMMENDED TO PROVIDE THE SAME BELOW THE INTERNAL PLINTH BEAM.
3. FOOTINGS ARE DESIGNED CONSIDERING THE MINIMUM DEPTH OF 1500MM BELOW THE ORIGINAL GROUND LEVEL. NOTIFY ENGINEER SHOULD THE DEPTH OF FOOTINGS REQUIRED TO BE PROVIDED IS MORE THAN THE DEPTH SPECIFIED ABOVE.
4. ALL CONCRETE SHALL BE PLACED 'IN THE DRY'FOR FOUNDATIONS.
5. COMPACTION OF FOUNDATION SHALL BE APPROVED BY ENGINEER PRIOR TO PLACEMENT OF CONCRETE.

C. LOADING

1. THIS STRUCTURE HAS BEEN DESIGNED FOR THE FOLLOWING LOADS.
   (a). DEAD LOADS;

UNIT WEIGHT OF AAC	6.5KN/M3
UNIT WEIGHT OF RCC	25KN/M3
UNIT WEIGHT OF PCC	24KN/M3
UNIT WEIGHT OF STONE	28KN/M3

   (b). SUPERIMPOSED (LIVELOADS)

GROUND FLOOR , 1st FLOOR	3KN/M2
LIVELOAD FOR ROOF FLOORS	.75KN/M2
LIVELOAD FOR STAIRCASE	4KN/M2

   (c). WIND LOAD

WIND PRESSURE	45.6M/S (AS CALCULATED)

   (d). OTHER LOADS:
   EARTHQUAKE LOAD IN ACCORDANCE WITH IS 1893:2002 ASSUMING ZONE V
   SUPERIMPOSED DEAD LOAD 1KN/M2
2. MAINTAIN STRUCTURE IN STABLE CONDITION DURING CONSTRUCTION.
3. DONOT PLACE OR STORE BUILDING MATERIALS ON CONCRETE MEMBERS WITHOUT ENGINEER'S APPROVAL.

D. CONCRETE.

1. CONCRETE QUALITY SHALL COMPLY WITH IS 456:2000
2. PROJECT ASSESSMENT OF CONCRETE STRENGTH IS REQUIRED.
3. GRADE OF CONCRETE IS M20 FOR ALL RCC WORKS. (1:1.5:3=1 cement:1.5 Sand: 3 Aggregates)
4. FOR THE ABOVE GRADE TO BE ACHIEVED, MAXIMUM FREE WATER-CEMENT RATIO SHALL BE 0.55, MINIMUM CEMENT CONTENT SHALL BE 300KG/M3 AND MAXIMUM AMOUNT OF WATER SHALL BE 180L.
5. WATER USED FOR MIXING AND CURING SHALL COMPLY WITH CLAUSE 5.4 OF IS 456:2000.

6. MECHANICALLY VIBRATE CONCRETE IN THE FORM TO GIVE MAXIMUM COMPACTION WITHOUT SEGREGATION OF THE CONCRETE.
7. CURE CONCRETE AS REQUIRED BY THE CLAUSE 13.5 OF IS456:2000 AND WORK SPECIFICATIONS.
8. CONCRETE SIZES AS DRAWN ARE MINIMUM AND DONOT INCLUDE APPLIED FINISHES.
9. DONOT MAKE UNSPECIFIED HOLES OR CHASES WITHOUT ENGINEER'S APPROVAL.
10. DONOT PLACE CONDUITS, PIPES AND THE LIKEWITHIN COVER CONCRETE.
11. AGGREGATES SHALL COMPLY WITH CLAUSE 5.3 OF IS456:2000. NOMINAL SIZE OF COARSE AGGREGATES SHALL BE 20MM.
12. THE CHARACTERISTICS STRENGTH OF CONCRETE AT 28 DAYS SHALL BE 20MPA. NOTE THAT THE MEAN COMPRESSIVE STRENGTH OBTAINED FROM THE LABORATORY HAS TO BE WELL ABOVE THIS VALUE.
13. ALL FORMWORKS FOR BEAMS AND SLABS ARE TO REMOVED BEFORE CONSTRUCTION OF WALLS OR OTHER PERMANENT LOADINGS. ALL FORMWORK AND ITS REMOVAL MUST BE IN ACCORDANCE TO IS 456:2000.

E. REINFORCEMENT.

1. GRADE OF STEEL USED FOR RCC WORKS SHALL BE FE500.
2. BAR NOTATION GIVES THE FOLLOWING INFORMATION IN THIS ORDER: NUMBER OF BARS BAR SIZE(MM),SPACING(MM, IF REQUIRED).
3. REINFORCEMENT IS REPRESENTED DIAGRAMATICALLY AND NOT NECESSARILY IN TRUE PROJECTION.
4. LAP REINFORCEMET ONLYAT LOCATIONS SHOWN IN THE DRAWINGS. LAP LENGTH SHALL COMPLY WITH IS456:2000. LAP SPLICES SHALL NOT BE LESS THAN THE DEVELOPMENT LENGTH IN TENSION(GENERALLY 57Ø).
5. REINFORCEMENT SHALL NOT BE CUT, BENT OR HEATED ON SITE WITHOUT ENGINEER'S APPROVAL.
6. THE DEVIATION OF REINFORCEMENT FROM ITS SPECIFIED POSITION SHALL NOT EXCEED THE FOLLOWING(MM)
   (a). TOLERANCE FOR COVER -0,+10MM. WHERE A NEGATIVE VALUE INDICATE A DECREASE IN SPECIFED COVER, AND POSITIVE VALUE INDICATES AN INCREASE IN COVER.
   (b). TOLERANCE ON PLACEMENT OF REINFORCEMENT.
   FOR SLABS AND STAIRCASE -10,+10MM.
   FOR BEAMS, COLUMNS AND FOUNDATION -15,+15MM.
7. SPACERS AND SUPPORTS SHALL BE LOCATED AT CENTRES CLOSE ENOUGH (PREFERABLY NOT EXCEEDING 750MM C/C FOR COLUMN AND BEAM REINFORCEMENT AND 450MM FOR SLAB REINFORCEMENT). TO PREVENT DISPLACMENT OF REINFORCEMENT BY WORKMEN OR EQUIPMENT DURING FIXING AND SUBSEQUENT CONCRTE PLACEMENT WITHIN TOLERANCE GIVEN ABOVE.
8. THE COVER TO THE REINFORCEMENT NEAREST THE CONCRETE SURFACE SHALL NOT LESS THAN THE FOLLOWING EXCEPT WHERE SPECIFIED OTHERWISE:

BEAMS	30MM
COLUMNS	40MM
FLOOR SLABS AND STAIRCASE	20MM
FOUNDATION	50MM

9. BENDING OF REINFORCEMENT IN BEAMS AND COLUMNS SHALL COMPLY WITH TH REQUIREMENTS OF IS 456:2000
10. FORMWORK SHALL COMPLY WITH CLAUSE 11 OF IS 456:2000
11. STRIPPING OF FORMWORK SHALL COMPLY WITH CLAUSE 11.3 OF IS:456:2000

F. WELDING AND BOLTING.

1. WELDING TO BE CARRIED OUT IN ACCORDANCE WITH IS 816:1969, IS 819:1957, IS 1024:1979, IS 1261:1959, IS 1323:1982 AND IS: 9595: 1980 AS APPROPRIATE.
2. THE STRENGTH OF ELECTRODE USED FOR WELDING SHALL BE EQUAL TO OR GREATER THAN THE STRENGTH OF MEMBER THAT IS BEING WELDED.
3. ALL WELD SHALL BE COMPLETE PENETRATION BUTT WELD.
4. ALL BOLTS SHALL BE HIGH STRENGTH FRICTION GRIP GALVANIZED M16 AND M20 IN ACCORDANCE WITH IS 3757:1967 AND IS 800: 1984.
5. ALL MEMBERS OF STEEL TRUSS SHALL BE DRY AND THROUGHLY CLEANED FROM ALL LOOSESCALE AND RUST PRIOR TO PAINTING.
6. THE MEMBERS SHALL BE PROVIDED WITH COAT OF ZINC COATING.

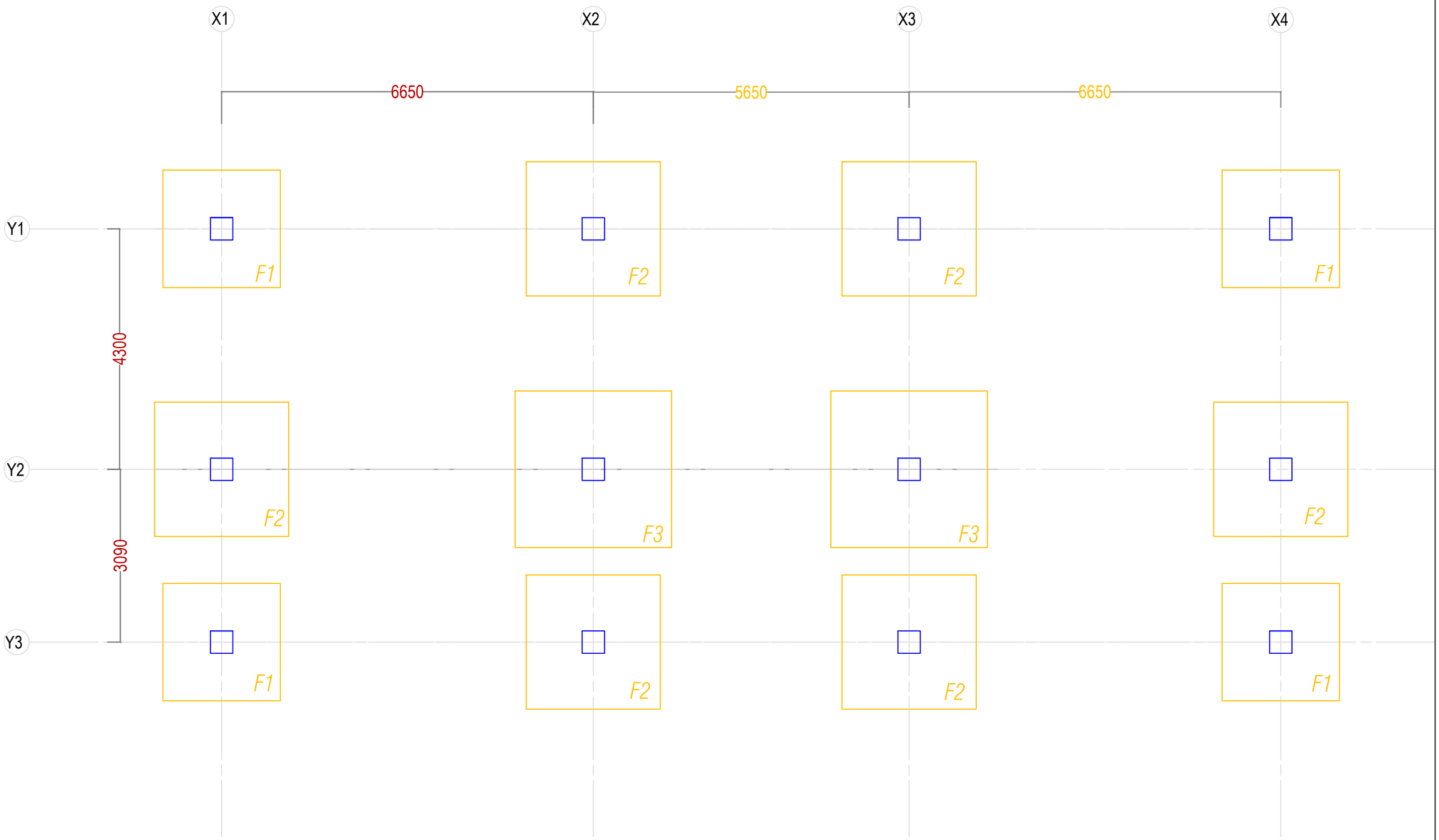

Khorlochhu	**STRUCTURAL DRAWING**	**NOTES**	**CHECKED**	**APPROVED**	**DATE**	**DRAWING NO.**
	PROJECT TITLE / **DRAWING TITLE**	1. ALL DIMENSIONS ARE IN MILLIMETER & ELEVATION IN METER UNLESS SPECIFIED OTHERWISE. 2. ALL DIMENSIONS MEASURE UNFINISHED SURFACES UNLESS SPECIFIED OTHERWISE. 3. DIMENSIONS ARE TO BE READ AND NOT SCALED OFF. 4. ANY DISCREPANCIES IN THE DRAWING ARE TO BE BROUGHT TO THE IMMEDIATE NOTICE OF THE SUPERVISION TEAM.				**STR_03**
	Construction of Doksum Primary School / **FOOTING_PLAN_LAYOUT**				MARCH, 2026	**SCALE**
						NTS

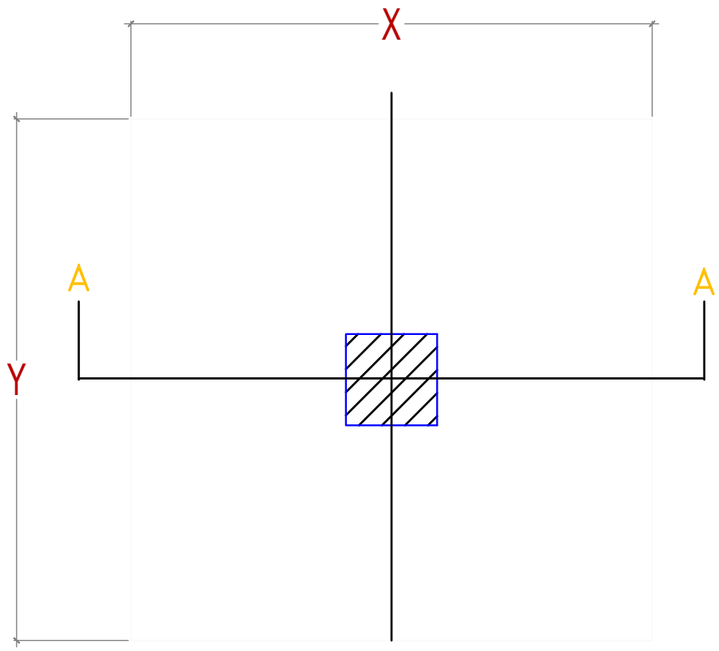

Typical Footing Plan

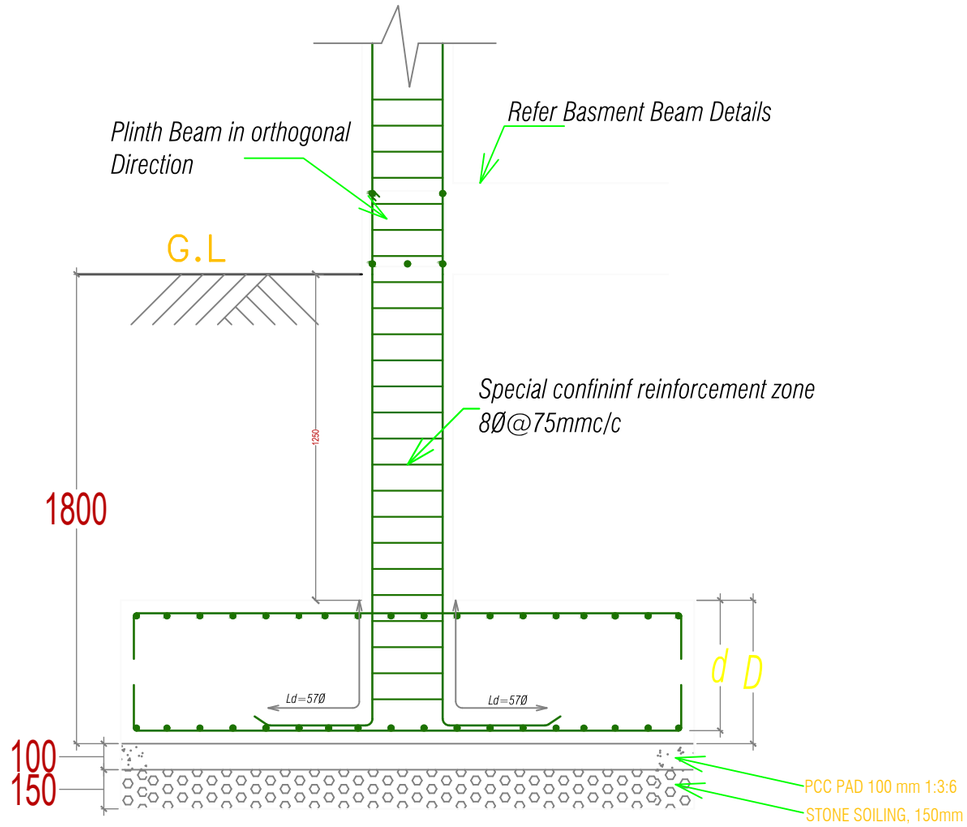

Typical Isolated Footing Details (Section A-A)

FOOTING SCHEDULE					
Footing Type	Size (X x Y)	Column Size (X x Y)	D	RFT BAR IN Bottom (Bothways)	RFT BAR IN Top (Bothways)
F1	2100 x 2100	400 x 400	400	12Ø@155 c/c	12Ø@175 c/c
F2	2400 x 2400	400 x 400	400	12Ø@155 c/c	12Ø@175 c/c
F3	2800 x 2800	400 x 400	450	12Ø@150 c/c	12Ø@170 c/c

FOOTINGS SCHEDULE/TYPICAL DETAILS

Khorlochhu

STRUCTURAL DRAWING

PROJECT TITLE	DRAWING TITLE
Construction of Doksum Primary School	FOOTING_DETAILS

NOTES

1. ALL DIMENSIONS ARE IN MILLIMETER & ELEVATION IN METER UNLESS SPECIFIED OTHERWISE.
2. ALL DIMENSIONS MEASURE UNFINISHED SURFACES UNLESS SPECIFIED OTHERWISE.
3. DIMENSIONS ARE TO BE READ AND NOT SCALED OFF.
4. ANY DISCREPANCIES IN THE DRAWING ARE TO BE BROUGHT TO THE IMMEDIATE NOTICE OF THE SUPERVISION TEAM.

CHECKED	APPROVED	DATE	DRAWING NO.
			STR_04
		MARCH, 2026	SCALE
			NTS

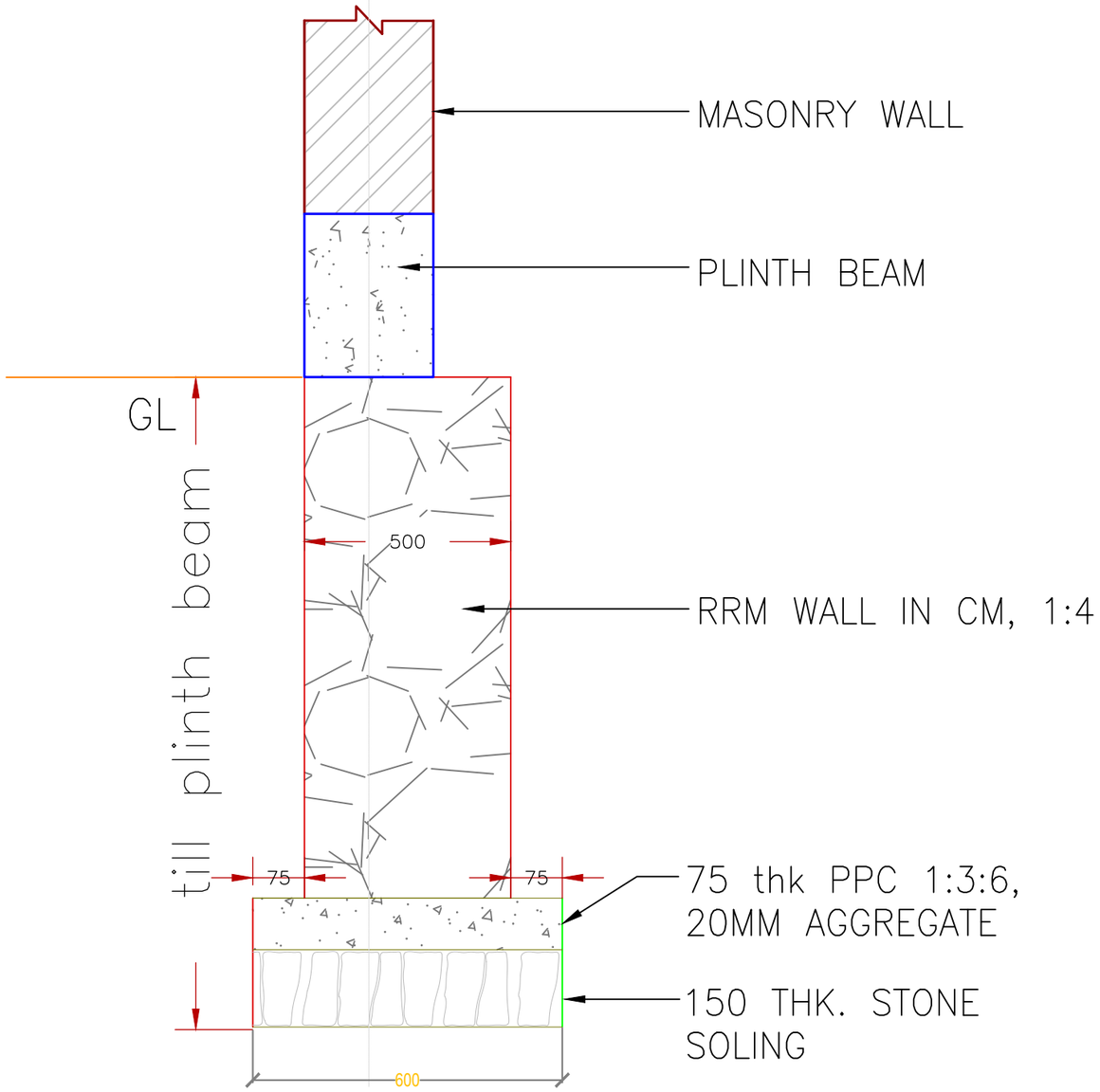

RRM WALL BELOW EXTERNAL PLINTH BEAM

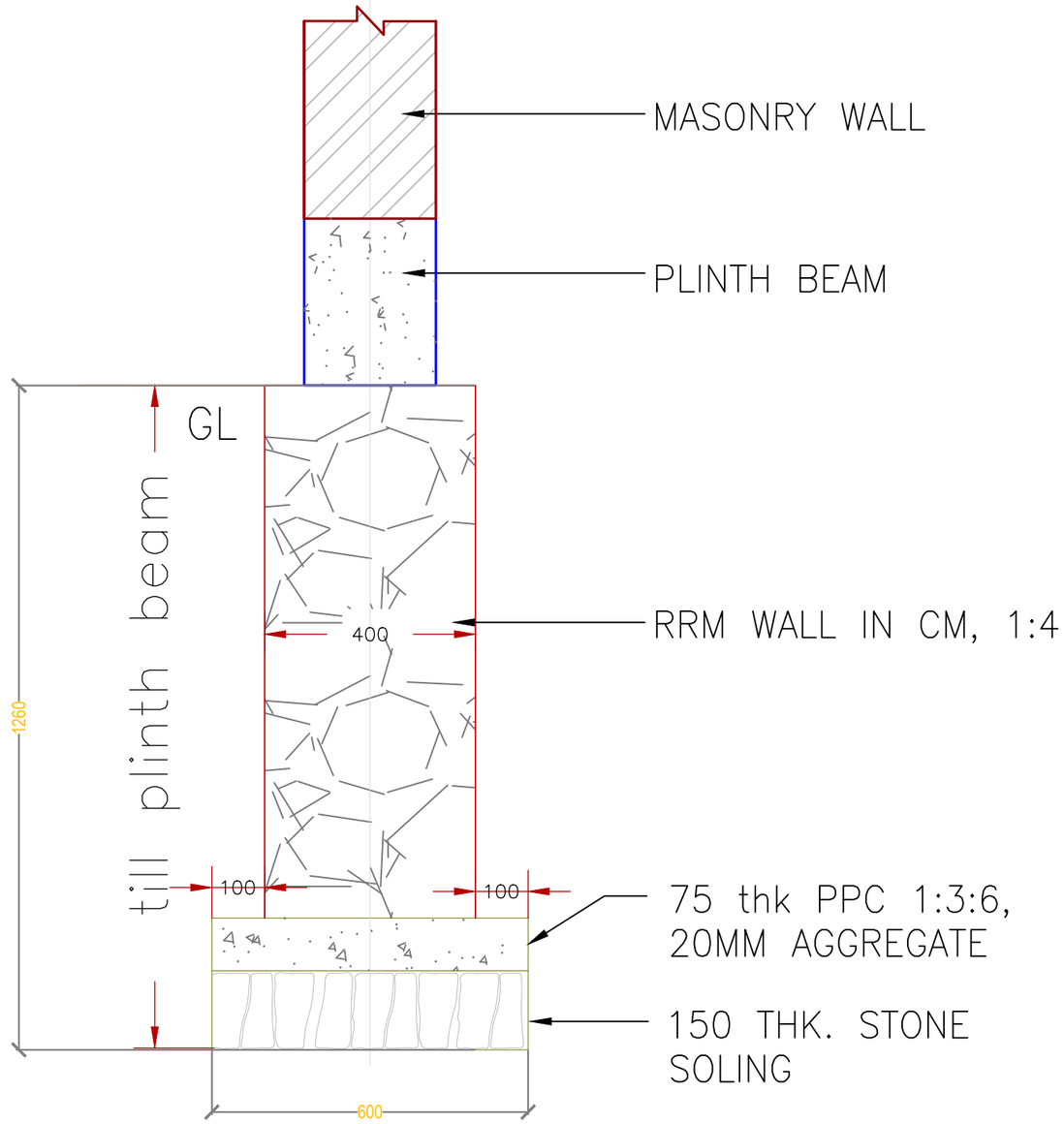

RRM WALL BELOW INTERNAL PLINTH BEAM

TYPICAL FOUNDATION WALL DETAILS

Khorlochhu

STRUCTURAL DRAWING		NOTES	CHECKED	APPROVED	DATE	DRAWING NO.
PROJECT TITLE	DRAWING TITLE	1. ALL DIMENSIONS ARE IN MILLIMETER & ELEVATION IN METER UNLESS SPECIFIED OTHERWISE. 2. ALL DIMENSIONS MEASURE UNFINISHED SURFACES UNLESS SPECIFIED OTHERWISE. 3. DIMENSIONS ARE TO BE READ AND NOT SCALED OFF. 4. ANY DISCREPANCIES IN THE DRAWING ARE TO BE BROUGHT TO THE IMMEDIATE NOTICE OF THE SUPERVISION TEAM.				STR_05
Construction of Doksum Primary School	RRM_WALL_DETAILS				MARCH, 2026	SCALE NTS

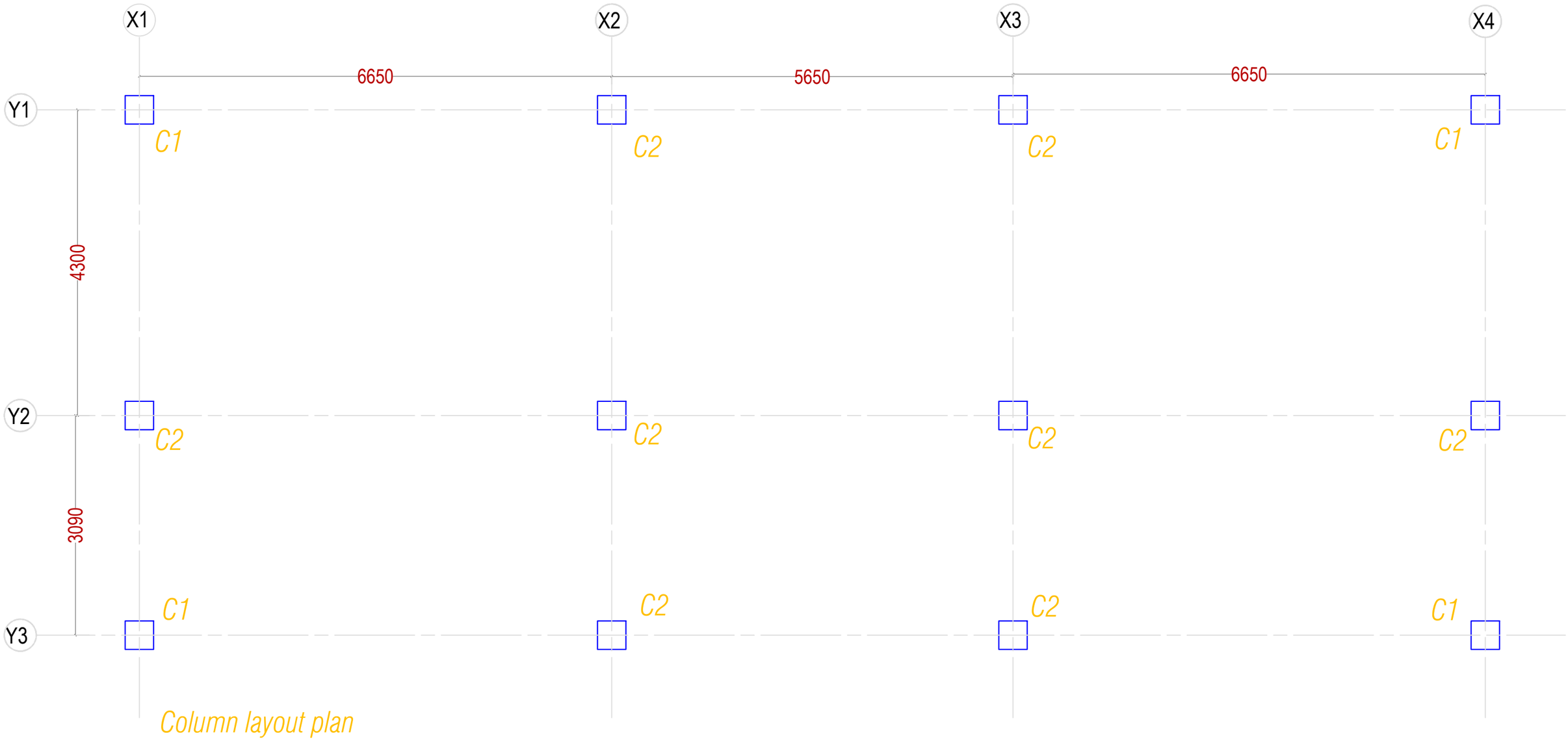

Khorlochhu	**STRUCTURAL DRAWING**	**NOTES**	**CHECKED**	**APPROVED**	**DATE**	**DRAWING NO.**
	PROJECT TITLE / **DRAWING TITLE**	1. ALL DIMENSIONS ARE IN MILLIMETER & ELEVATION IN METER UNLESS SPECIFIED OTHERWISE. 2. ALL DIMENSIONS MEASURE UNFINISHED SURFACES UNLESS SPECIFIED OTHERWISE. 3. DIMENSIONS ARE TO BE READ AND NOT SCALED OFF. 4. ANY DISCREPANCIES IN THE DRAWING ARE TO BE BROUGHT TO THE IMMEDIATE NOTICE OF THE SUPERVISION TEAM.				**STR_06**
	Construction of Doksum Primary School / **COLUMN_LAYOUT_PLAN**				MARCH, 2026	**SCALE** NTS

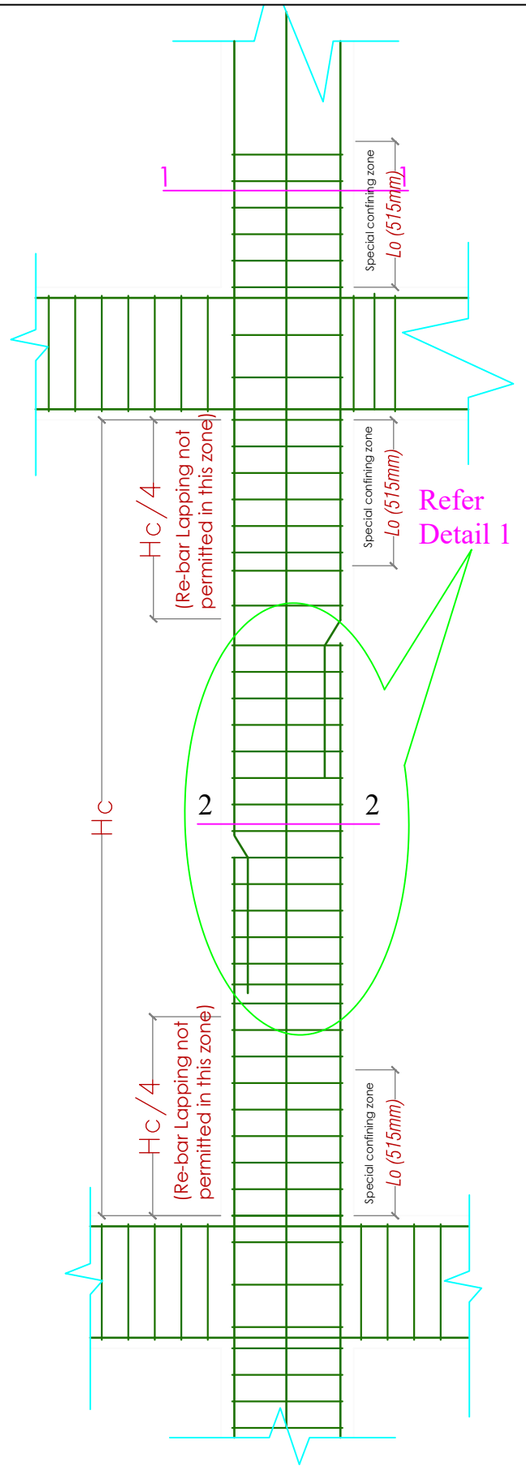

TYPICAL SECTION (showing Typical arrangment of Rebar and Ties in columns)

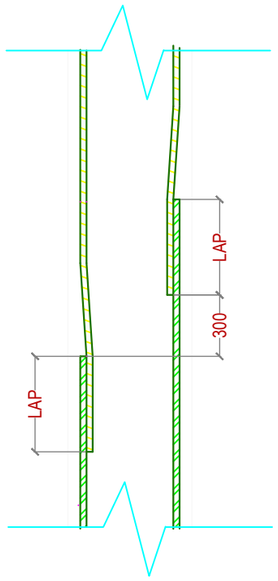

DETAIL1 (showing staggering of laps in columns)

Bar Dia.	Splice Length
16Ø	912
20Ø	1140
25Ø	1425

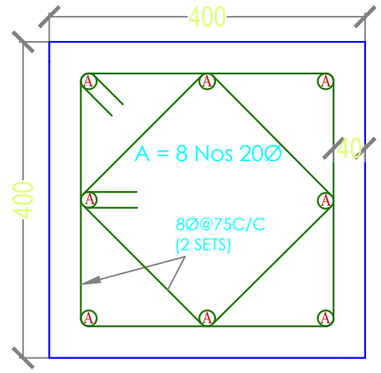

SECTION 1-1

(All columns shown as C1)

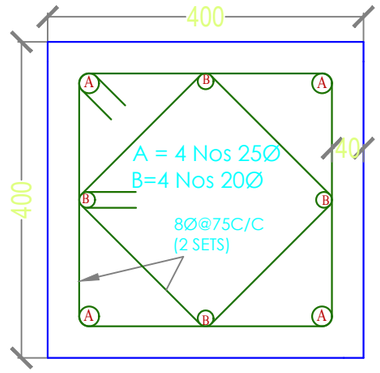

SECTION 1-1

(All columns shown as C2)

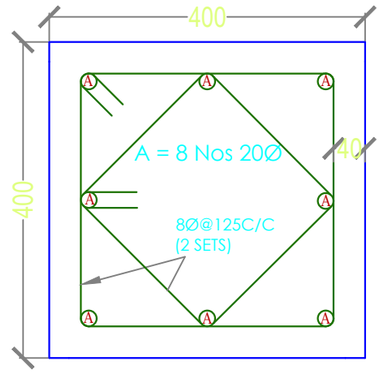

SECTION 2-2

(All columns shown as C1)

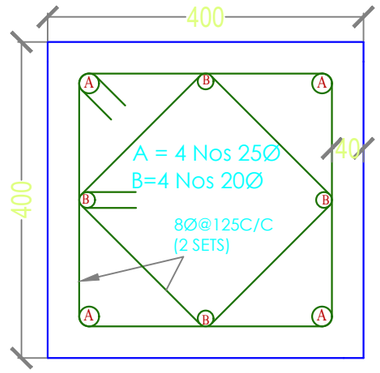

SECTION 2-2

(All columns shown as C2)

Khorlochhu

STRUCTURAL DRAWING

PROJECT TITLE	DRAWING TITLE
Construction of Doksum Primary School	COLUMN_DETAILS

NOTES

1. ALL DIMENSIONS ARE IN MILLIMETER & ELEVATION IN METER UNLESS SPECIFIED OTHERWISE.
2. ALL DIMENSIONS MEASURE UNFINISHED SURFACES UNLESS SPECIFIED OTHERWISE.
3. DIMENSIONS ARE TO BE READ AND NOT SCALED OFF.
4. ANY DISCREPANCIES IN THE DRAWING ARE TO BE BROUGHT TO THE IMMEDIATE NOTICE OF THE SUPERVISION TEAM.

CHECKED	APPROVED	DATE	DRAWING NO.
			STR_08
		MARCH, 2026	SCALE
			NTS

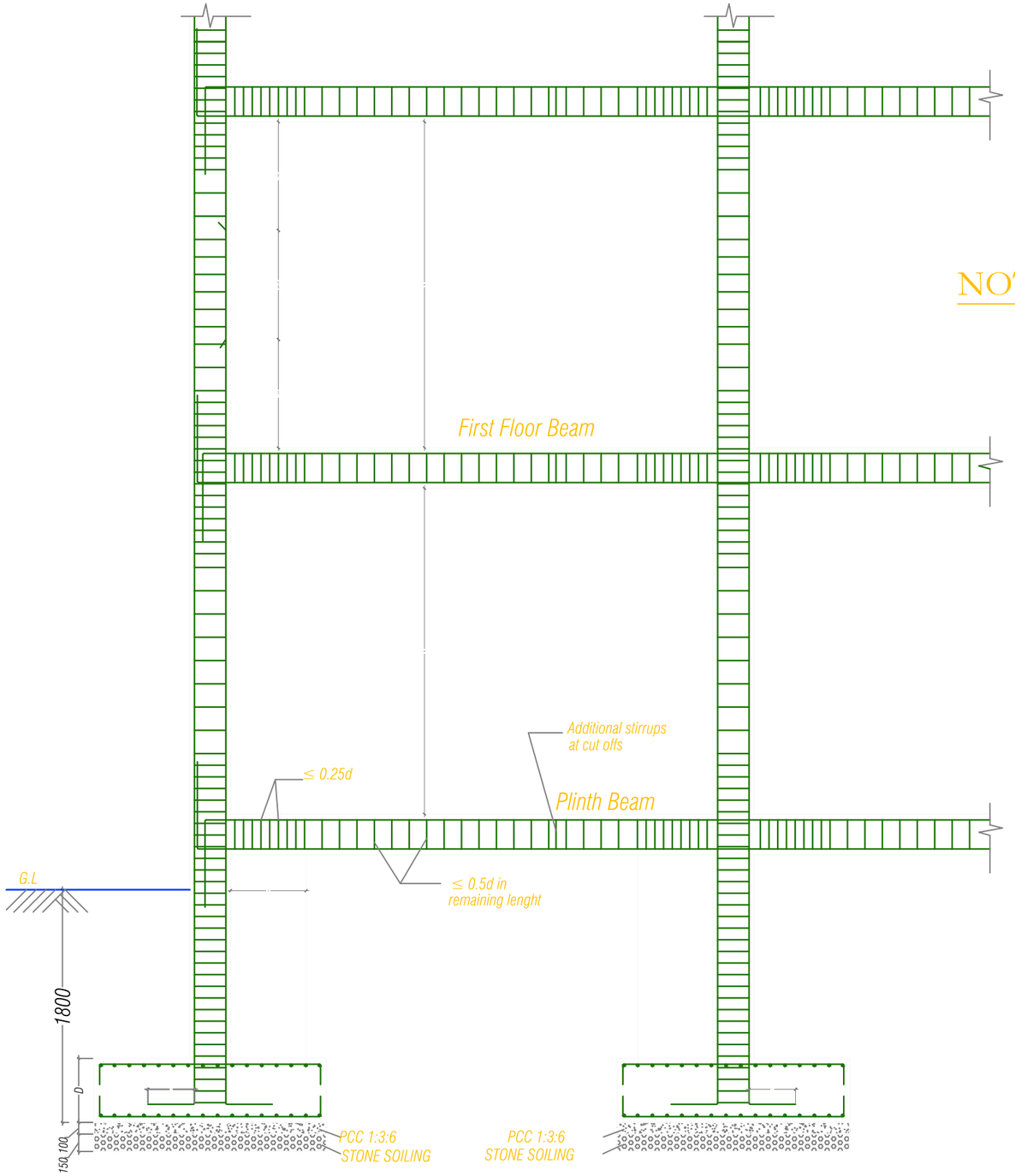

BEAM-COLUMN JUNCTION DETAILING

NOTE:

Clear Cover Details:

1. The clear cover to all footings should be 50 mm
2. The clear cover to all columns should be 40 mm
3. The clear cover to all beams should be 30 mm
4. The clear cover to all slabs should be 25 mm

Reinforcement Details

1. Not more than 50% of bars shall be spliced at one section both in beams and cloumns.
2. Column bars shall be spliced at a distance of Hc/4 from the face of support
3. No lap splice in columns are provided in first storey
4. Top bars in the beam shall splice at midspan while bottom bars shall be spliced at a distance of 2d from the face of the column but not at mid span
5. Full lenght of splice stirrups in ties in column shall be 8Ø @ 100mm c/c
6. The column encasing the stair case shall be provide with special confining reinforcement 8Ø @ 75mm c/c throughout the height of column

Khorlochhu

STRUCTURAL DRAWING

PROJECT TITLE	DRAWING TITLE
Construction of Doksum Primary School	COLUMN_BEAM_JUNCTION_DETAILS

NOTES

1. ALL DIMENSIONS ARE IN MILLIMETER & ELEVATION IN METER UNLESS SPECIFIED OTHERWISE.
2. ALL DIMENSIONS MEASURE UNFINISHED SURFACES UNLESS SPECIFIED OTHERWISE.
3. DIMENSIONS ARE TO BE READ AND NOT SCALED OFF.
4. ANY DISCREPANCIES IN THE DRAWING ARE TO BE BROUGHT TO THE IMMEDIATE NOTICE OF THE SUPERVISION TEAM.

CHECKED	APPROVED	DATE	DRAWING NO.
			STR_08
		MARCH, 2026	SCALE
			NTS

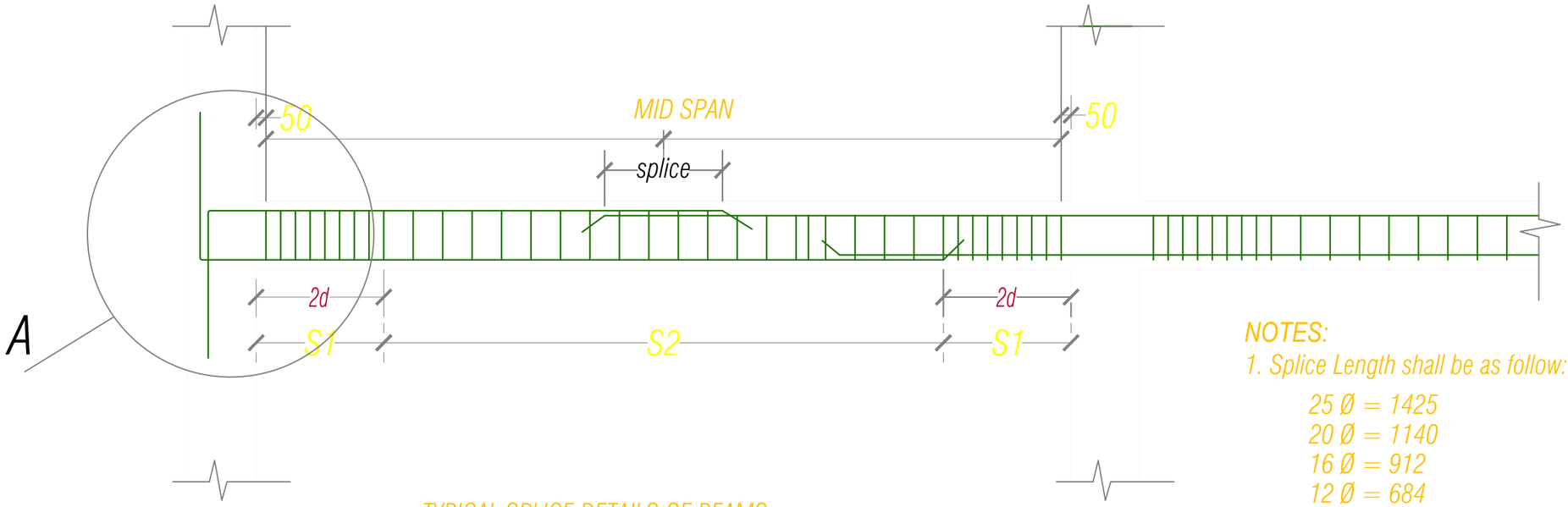

TYPICAL SPLICE DETAILS OF BEAMS

NOTES:

1. Splice Length shall be as follow:

25 Ø = 1425
20 Ø = 1140
16 Ø = 912
12 Ø = 684
10 Ø = 570

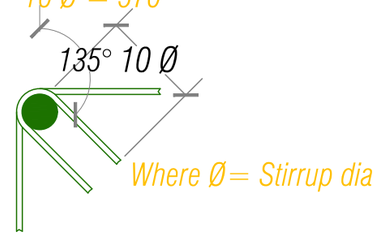

DEATAILS AT -B

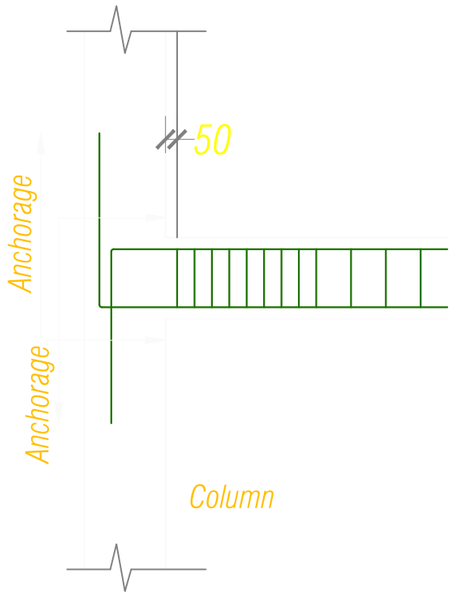

ANCHORAGE
DEATAILS AT -A

Bar Anchrage Lenght
(Minimum Lenght = 67Ø)

10 Ø = 670
12 Ø = 804
16 Ø = 1072
20 Ø = 1340
25 Ø = 1675

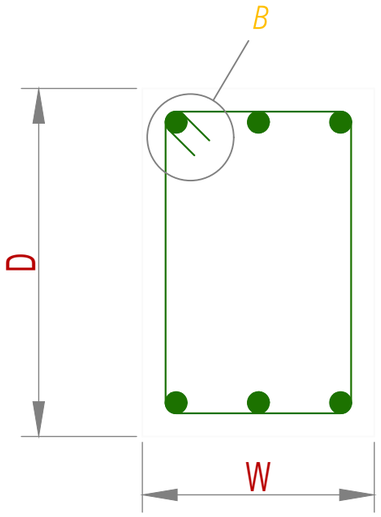

BEAM STIRRUPS DETAILS

Stirrups in the Beams

Location	: Stirrups provided
2d	: 8Ø@100c/c
S1	: 8Ø@150c/c
Splice	: 8Ø@100c/c

Typical Floor Beam Details

Khorlochhu

STRUCTURAL DRAWING		NOTES	CHECKED	APPROVED	DATE	DRAWING NO.
PROJECT TITLE	DRAWING TITLE	1. ALL DIMENSIONS ARE IN MILLIMETER & ELEVATION IN METER UNLESS SPECIFIED OTHERWISE. 2. ALL DIMENSIONS MEASURE UNFINISHED SURFACES UNLESS SPECIFIED OTHERWISE. 3. DIMENSIONS ARE TO BE READ AND NOT SCALED OFF. 4. ANY DISCREPANCIES IN THE DRAWING ARE TO BE BROUGHT TO THE IMMEDIATE NOTICE OF THE SUPERVISION TEAM.				STR_09
Construction of Doksum Primary School	TYPICAL_FLOOR_BEAM_DETAILS				MARCH, 2026	SCALE NTS

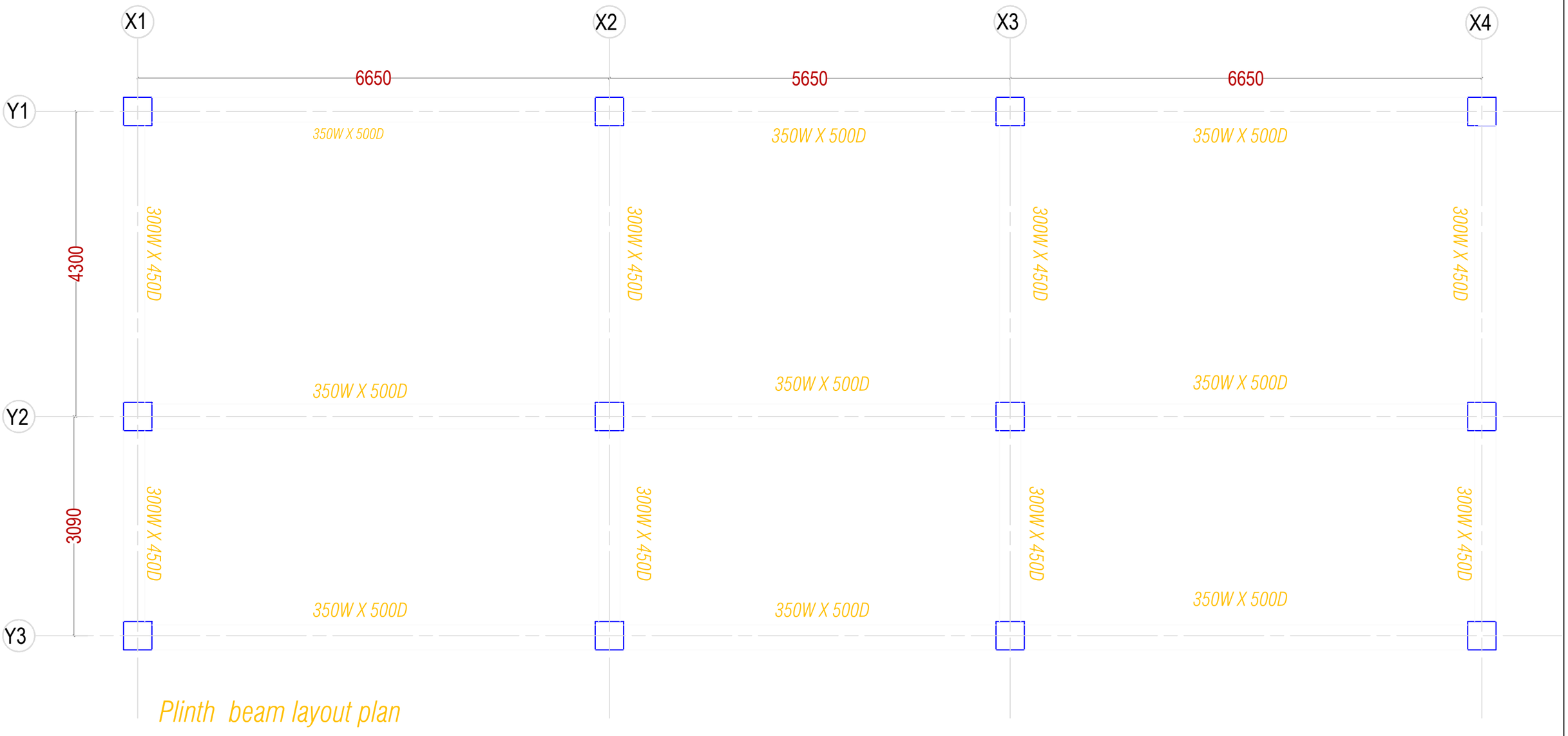

Plinth beam layout plan

Khorlochhu	**STRUCTURAL DRAWING**	**NOTES**	**CHECKED**	**APPROVED**	**DATE**	**DRAWING NO.**
	PROJECT TITLE / **DRAWING TITLE**	1. ALL DIMENSIONS ARE IN MILLIMETER & ELEVATION IN METER UNLESS SPECIFIED OTHERWISE. 2. ALL DIMENSIONS MEASURE UNFINISHED SURFACES UNLESS SPECIFIED OTHERWISE. 3. DIMENSIONS ARE TO BE READ AND NOT SCALED OFF. 4. ANY DISCREPANCIES IN THE DRAWING ARE TO BE BROUGHT TO THE IMMEDIATE NOTICE OF THE SUPERVISION TEAM.				STR_10
	Construction of Doksum Primary School / PLINTH_BEAM_LAYOUT_PLAN				MARCH, 2026	**SCALE** NTS

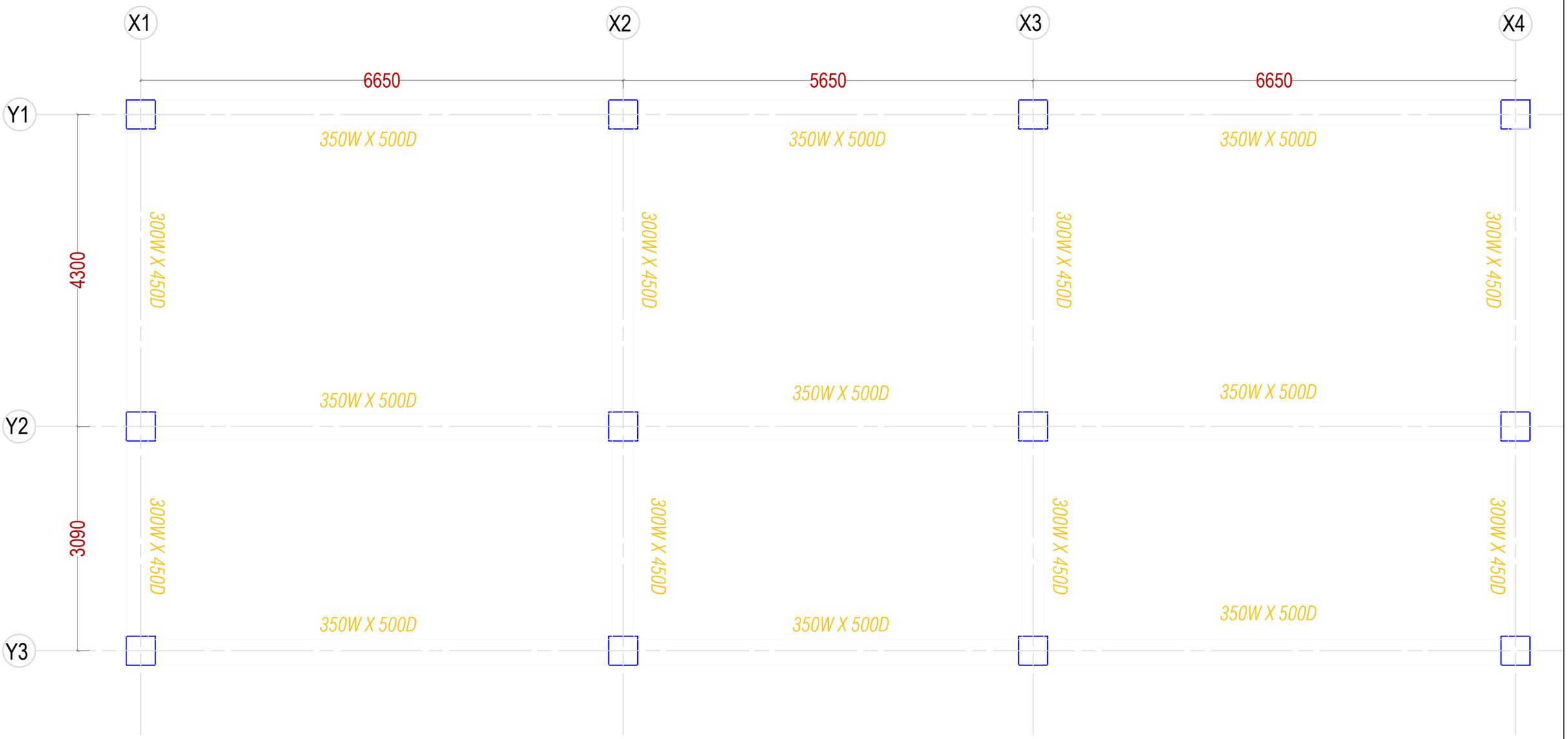

First floor beam layout plan

Khorlochhu	STRUCTURAL DRAWING	NOTES	CHECKED	APPROVED	DATE	DRAWING NO.
	PROJECT TITLE: Construction of Doksum Primary School	1. ALL DIMENSIONS ARE IN MILLIMETER & ELEVATION IN METER UNLESS SPECIFIED OTHERWISE. 2. ALL DIMENSIONS MEASURE UNFINISHED SURFACES UNLESS SPECIFIED OTHERWISE. 3. DIMENSIONS ARE TO BE READ AND NOT SCALED OFF. 4. ANY DISCREPANCIES IN THE DRAWING ARE TO BE BROUGHT TO THE IMMEDIATE NOTICE OF THE SUPERVISION TEAM.				STR_11
	DRAWING TITLE: FIRST_BEAM_LAYOUT_PLAN				MARCH, 2026	SCALE: NTS

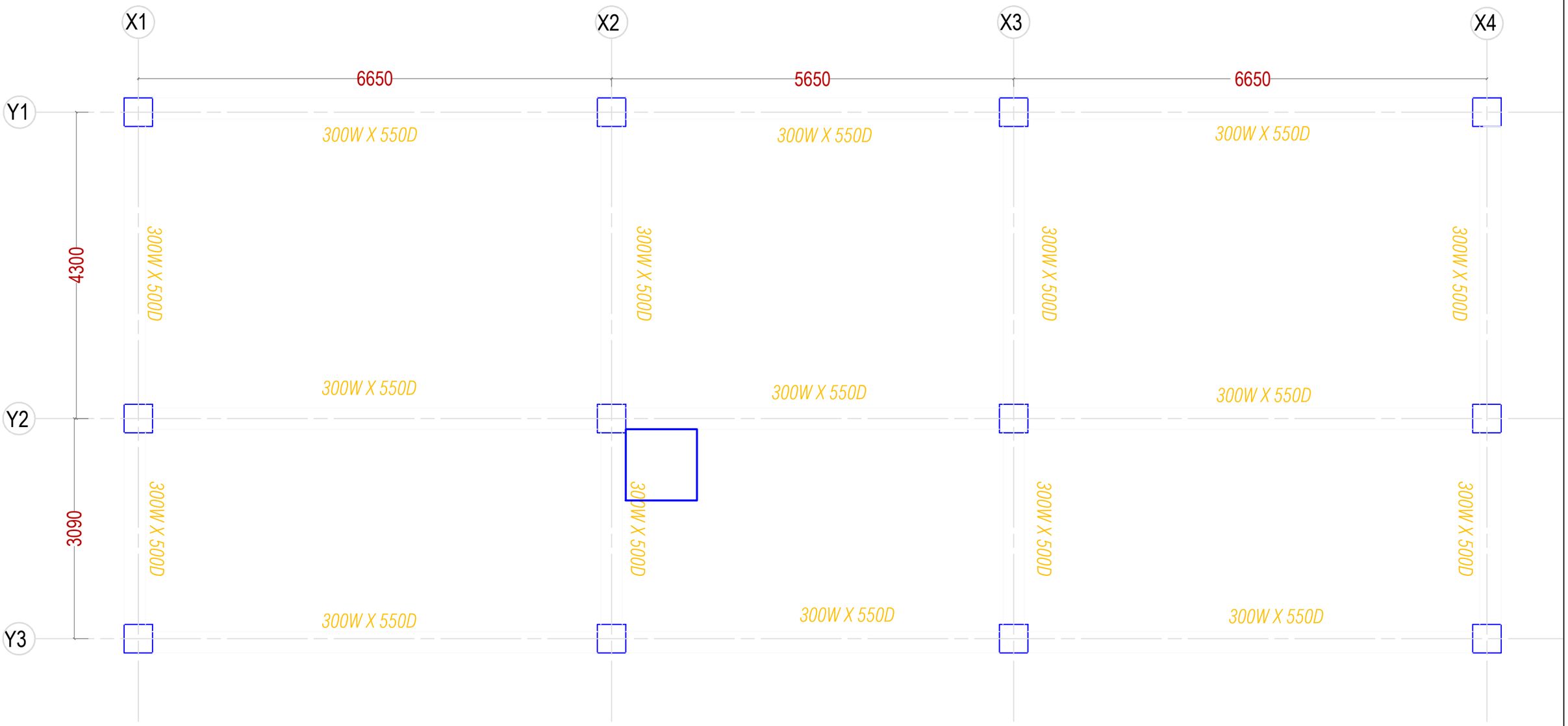

Roof floor beam layout plan

Khorlochhu	STRUCTURAL DRAWING	NOTES	CHECKED	APPROVED	DATE	DRAWING NO.
	PROJECT TITLE: Construction of Doksum Primary School	1. ALL DIMENSIONS ARE IN MILLIMETER & ELEVATION IN METER UNLESS SPECIFIED OTHERWISE. 2. ALL DIMENSIONS MEASURE UNFINISHED SURFACES UNLESS SPECIFIED OTHERWISE. 3. DIMENSIONS ARE TO BE READ AND NOT SCALED OFF. 4. ANY DISCREPANCIES IN THE DRAWING ARE TO BE BROUGHT TO THE IMMEDIATE NOTICE OF THE SUPERVISION TEAM.				STR_12
	DRAWING TITLE: ROOF_BEAM_LAYOUT_PLAN				MARCH, 2026	SCALE: NTS

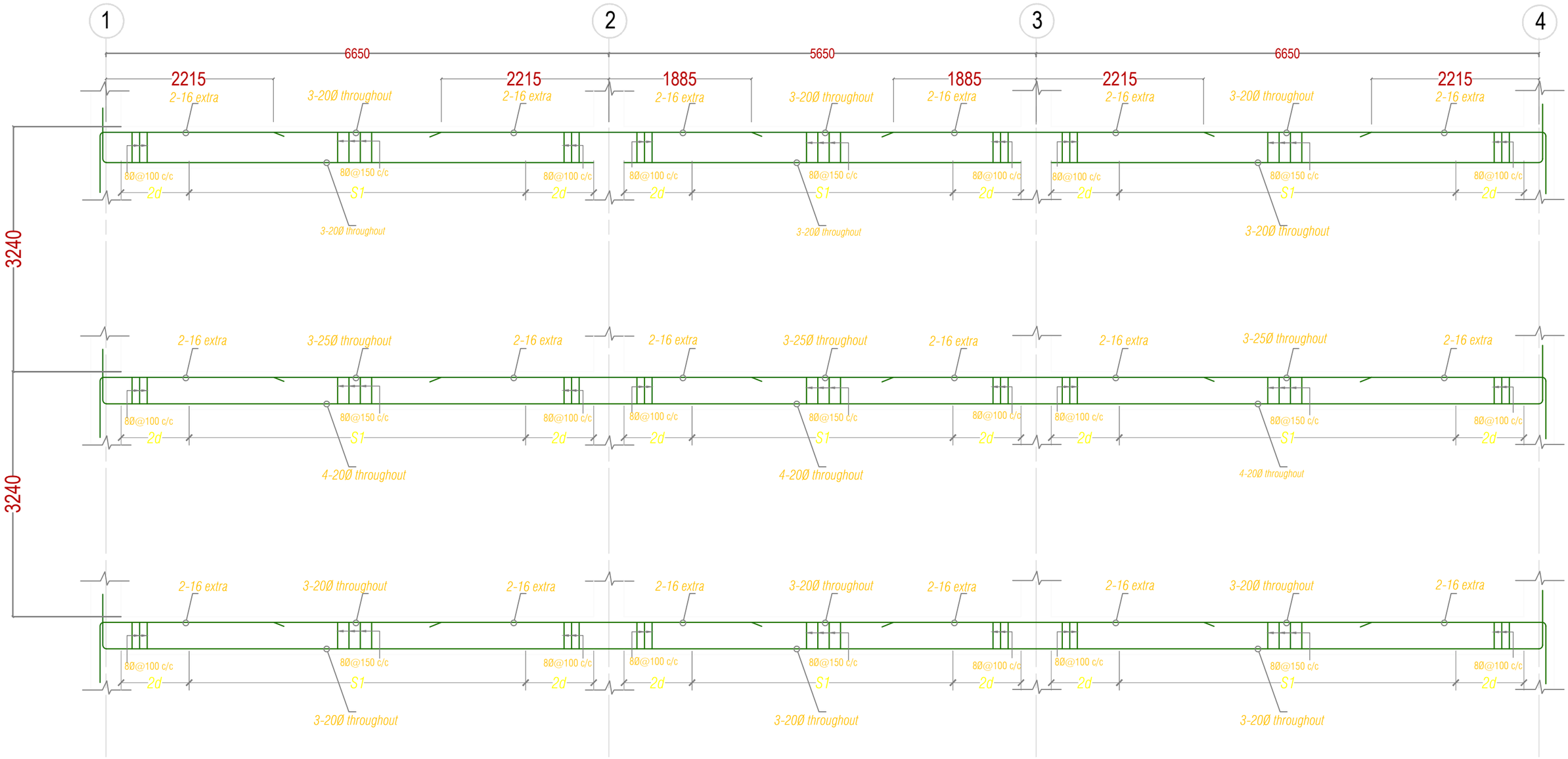

L-section along frame Y1

Khorlochhu	STRUCTURAL DRAWING	NOTES	CHECKED	APPROVED	DATE	DRAWING NO.
	PROJECT TITLE	1. ALL DIMENSIONS ARE IN MILLIMETER & ELEVATION IN METER UNLESS SPECIFIED OTHERWISE. 2. ALL DIMENSIONS MEASURE UNFINISHED SURFACES UNLESS SPECIFIED OTHERWISE. 3. DIMENSIONS ARE TO BE READ AND NOT SCALED OFF. 4. ANY DISCREPANCIES IN THE DRAWING ARE TO BE BROUGHT TO THE IMMEDIATE NOTICE OF THE SUPERVISION TEAM.				STR_13
	Construction of Doksum Primary School				MARCH, 2026	SCALE
	DRAWING TITLE					NTS
	BEAM_SECTION_ALONG_FRAME_Y1					

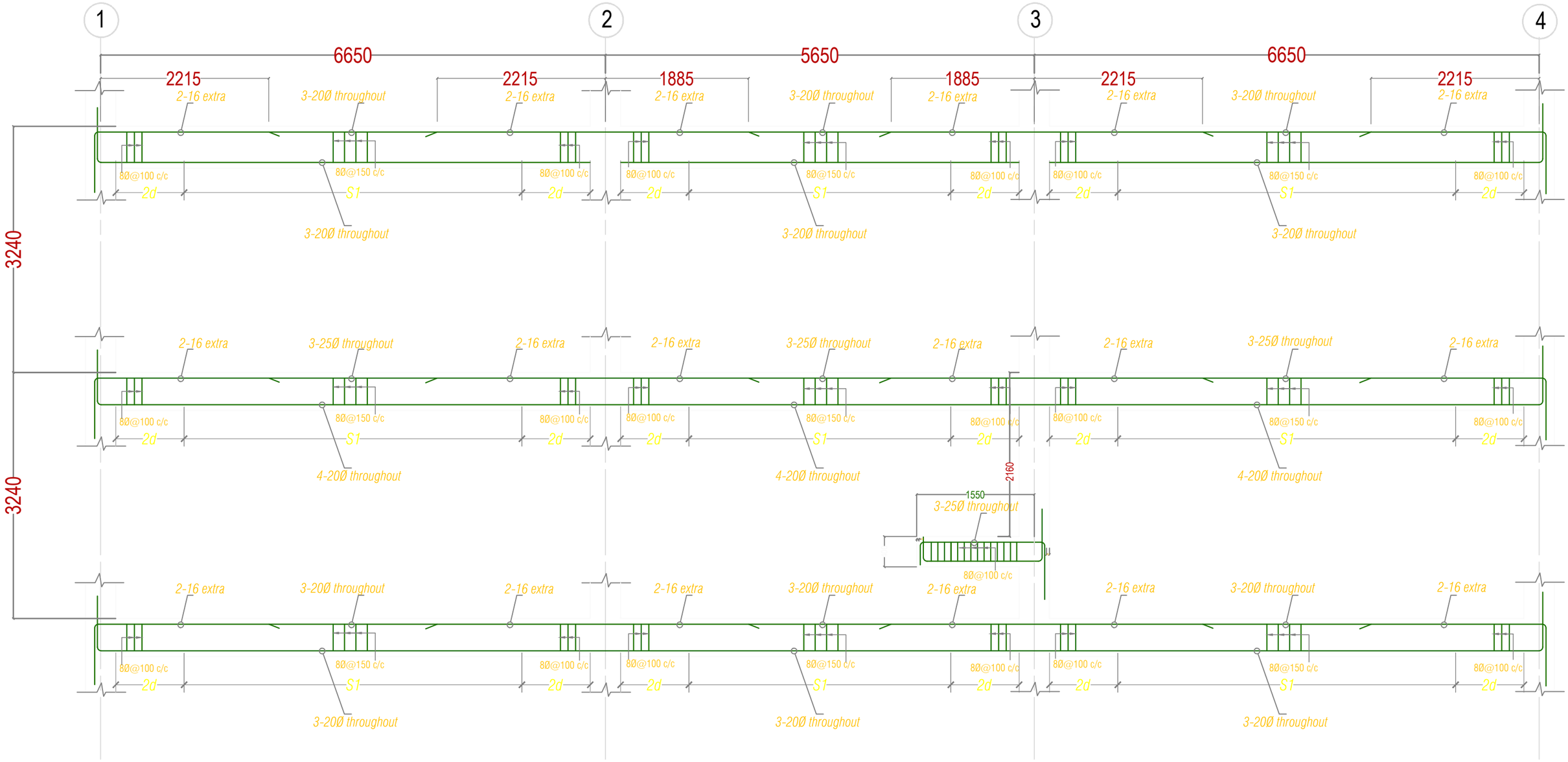

L-section along frame Y2

Khorlochhu	STRUCTURAL DRAWING	NOTES	CHECKED	APPROVED	DATE	DRAWING NO.
	PROJECT TITLE	1. ALL DIMENSIONS ARE IN MILLIMETER & ELEVATION IN METER UNLESS SPECIFIED OTHERWISE. 2. ALL DIMENSIONS MEASURE UNFINISHED SURFACES UNLESS SPECIFIED OTHERWISE. 3. DIMENSIONS ARE TO BE READ AND NOT SCALED OFF. 4. ANY DISCREPANCIES IN THE DRAWING ARE TO BE BROUGHT TO THE IMMEDIATE NOTICE OF THE SUPERVISION TEAM.				STR_14
	Construction of Doksum Primary School				MARCH, 2026	SCALE
	DRAWING TITLE					NTS
	BEAM_SECTION_ALONG_Y2					

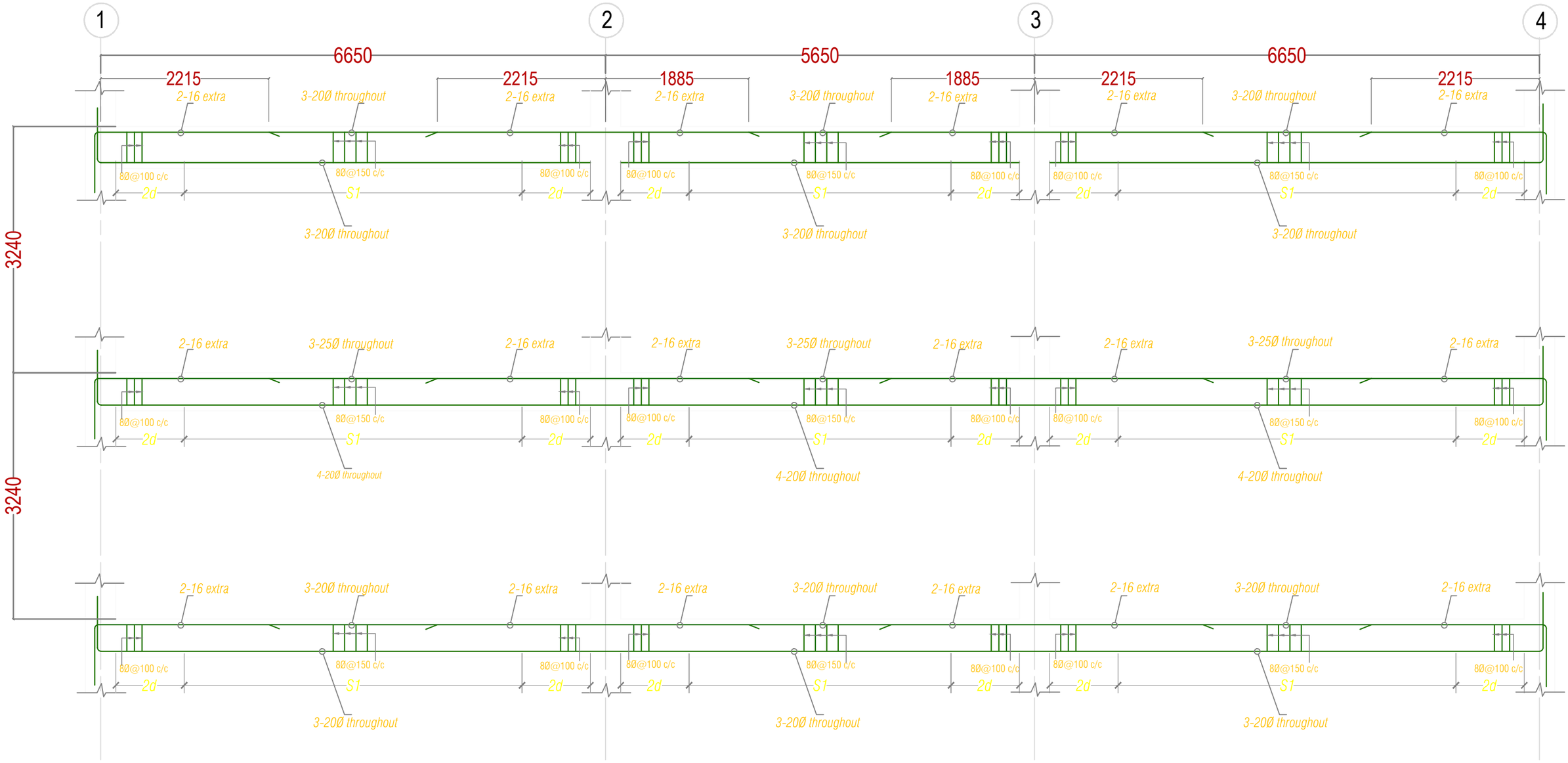

L-section along frame Y3

Khorlochhu

STRUCTURAL DRAWING

PROJECT TITLE	DRAWING TITLE
Construction of Doksum Primary School	BEAM_SECTION_ALONG_FRAME_Y3

NOTES

1. ALL DIMENSIONS ARE IN MILLIMETER & ELEVATION IN METER UNLESS SPECIFIED OTHERWISE.
2. ALL DIMENSIONS MEASURE UNFINISHED SURFACES UNLESS SPECIFIED OTHERWISE.
3. DIMENSIONS ARE TO BE READ AND NOT SCALED OFF.
4. ANY DISCREPANCIES IN THE DRAWING ARE TO BE BROUGHT TO THE IMMEDIATE NOTICE OF THE SUPERVISION TEAM.

CHECKED	APPROVED	DATE	DRAWING NO.
			STR_15
		MARCH, 2026	SCALE
			NTS

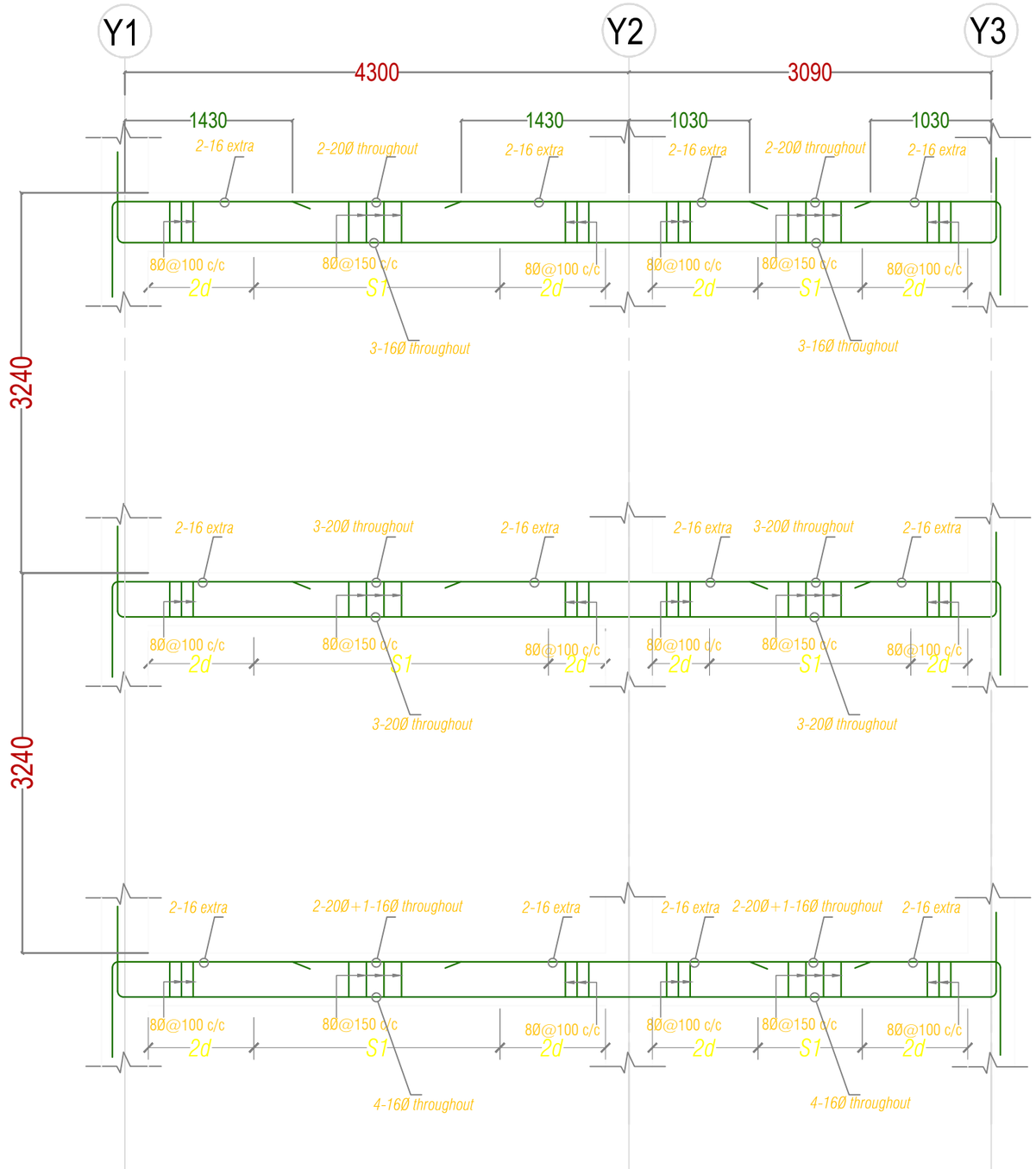

L-section along frame X1

Khorlochhu

STRUCTURAL DRAWING

PROJECT TITLE	DRAWING TITLE
Construction of Doksum Primary School	BEAM_SECTION_ALONG_FRAME_X1

NOTES

1. ALL DIMENSIONS ARE IN MILLIMETER & ELEVATION IN METER UNLESS SPECIFIED OTHERWISE.
2. ALL DIMENSIONS MEASURE UNFINISHED SURFACES UNLESS SPECIFIED OTHERWISE.
3. DIMENSIONS ARE TO BE READ AND NOT SCALED OFF.
4. ANY DISCREPANCIES IN THE DRAWING ARE TO BE BROUGHT TO THE IMMEDIATE NOTICE OF THE SUPERVISION TEAM.

CHECKED	APPROVED	DATE	DRAWING NO.
			STR_16
		MARCH, 2026	SCALE
			NTS

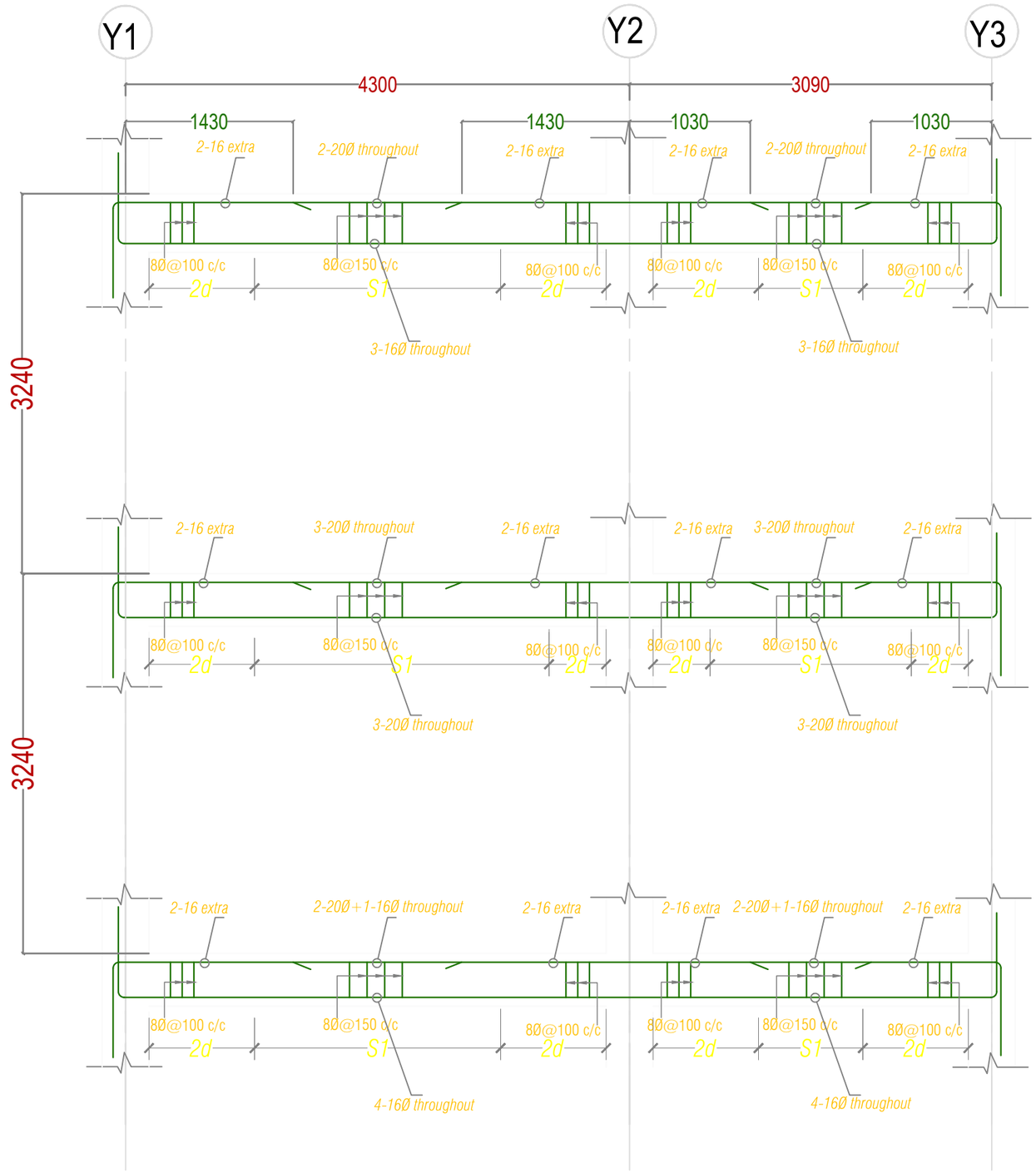

L-section along frame X2

Khorlochhu

STRUCTURAL DRAWING

PROJECT TITLE	DRAWING TITLE
Construction of Doksum Primary School	BEAM_SECTION_ALONG_FRAME_X2

NOTES

1. ALL DIMENSIONS ARE IN MILLIMETER & ELEVATION IN METER UNLESS SPECIFIED OTHERWISE.
2. ALL DIMENSIONS MEASURE UNFINISHED SURFACES UNLESS SPECIFIED OTHERWISE.
3. DIMENSIONS ARE TO BE READ AND NOT SCALED OFF.
4. ANY DISCREPANCIES IN THE DRAWING ARE TO BE BROUGHT TO THE IMMEDIATE NOTICE OF THE SUPERVISION TEAM.

CHECKED	APPROVED	DATE	DRAWING NO.
			STR_17
		MARCH, 2026	SCALE
			NTS

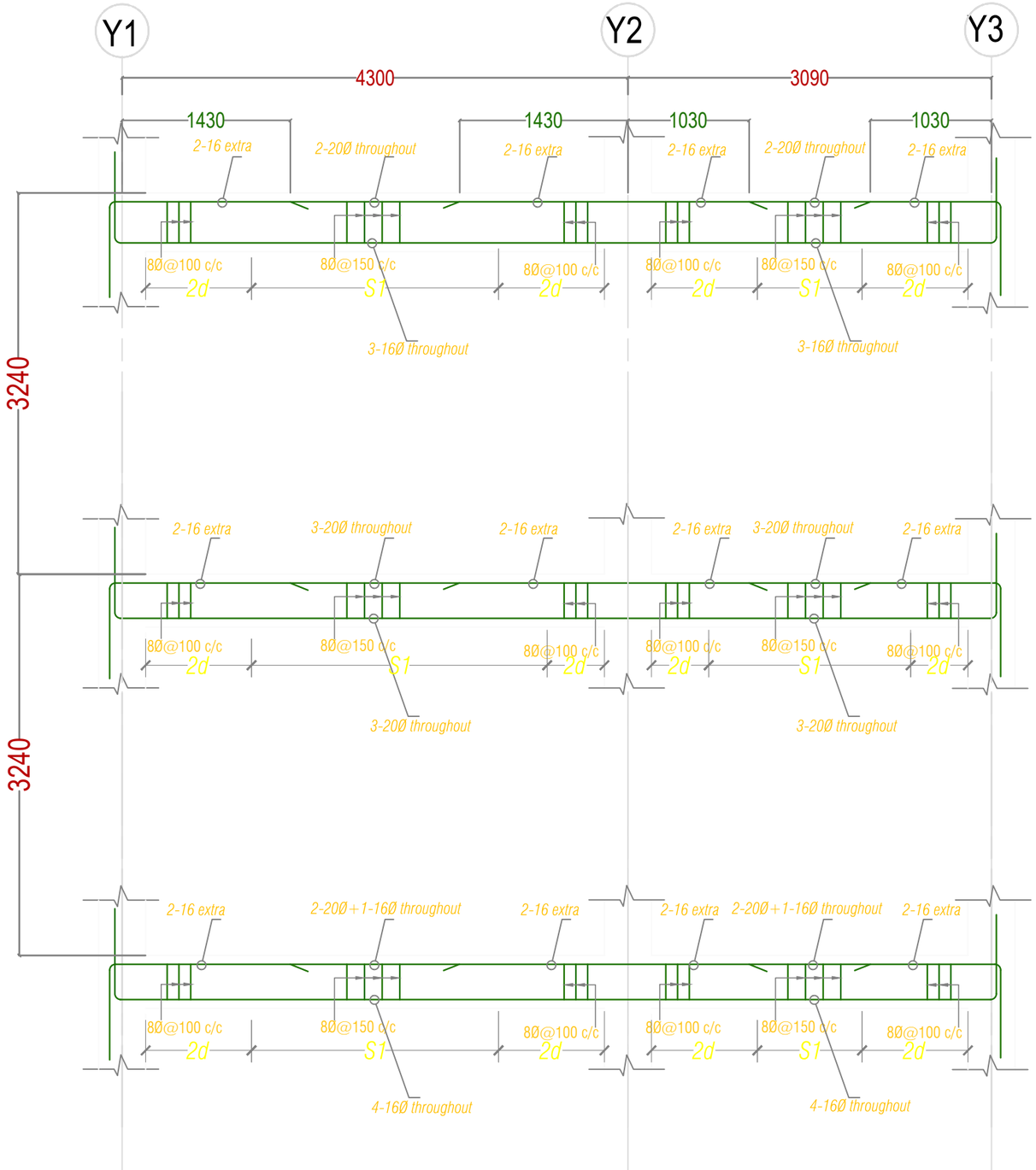

L-section along frame X3

Khorlochhu

STRUCTURAL DRAWING		NOTES	CHECKED	APPROVED	DATE	DRAWING NO.
PROJECT TITLE	DRAWING TITLE	1. ALL DIMENSIONS ARE IN MILLIMETER & ELEVATION IN METER UNLESS SPECIFIED OTHERWISE. 2. ALL DIMENSIONS MEASURE UNFINISHED SURFACES UNLESS SPECIFIED OTHERWISE. 3. DIMENSIONS ARE TO BE READ AND NOT SCALED OFF. 4. ANY DISCREPANCIES IN THE DRAWING ARE TO BE BROUGHT TO THE IMMEDIATE NOTICE OF THE SUPERVISION TEAM.				STR_18
Construction of Doksum Primary School	BEAM_SECTION_ALONG_FRAME_X3				MARCH, 2026	SCALE NTS

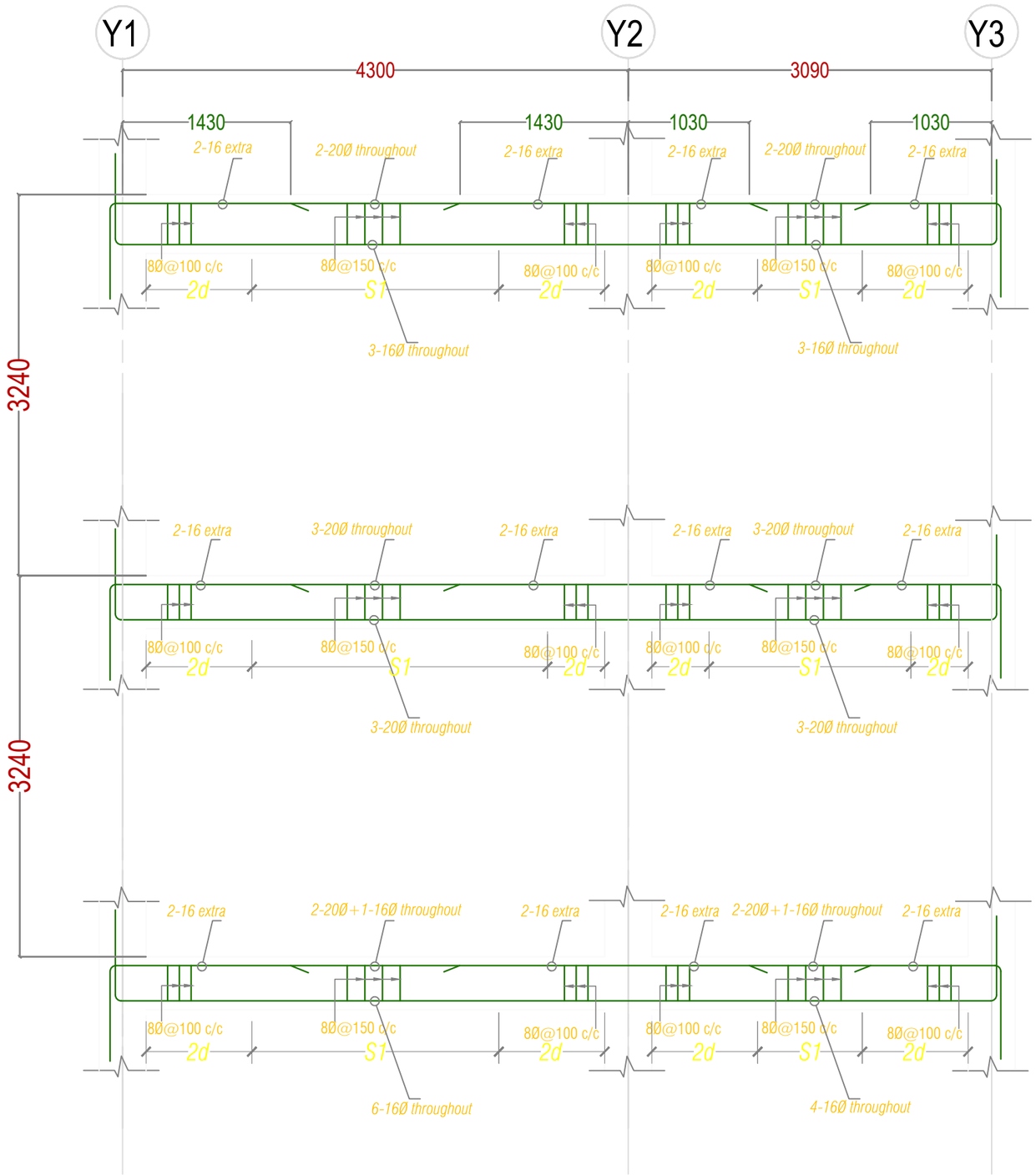

L-section along frame X4

Khorlochhu

STRUCTURAL DRAWING

PROJECT TITLE	DRAWING TITLE
Construction of Doksum Primary School	BEAM_SECTION_ALONG_FRAME_X4

NOTES

1. ALL DIMENSIONS ARE IN MILLIMETER & ELEVATION IN METER UNLESS SPECIFIED OTHERWISE.
2. ALL DIMENSIONS MEASURE UNFINISHED SURFACES UNLESS SPECIFIED OTHERWISE.
3. DIMENSIONS ARE TO BE READ AND NOT SCALED OFF.
4. ANY DISCREPANCIES IN THE DRAWING ARE TO BE BROUGHT TO THE IMMEDIATE NOTICE OF THE SUPERVISION TEAM.

CHECKED	APPROVED	DATE	DRAWING NO.
			STR_19
		MARCH, 2026	SCALE
			NTS

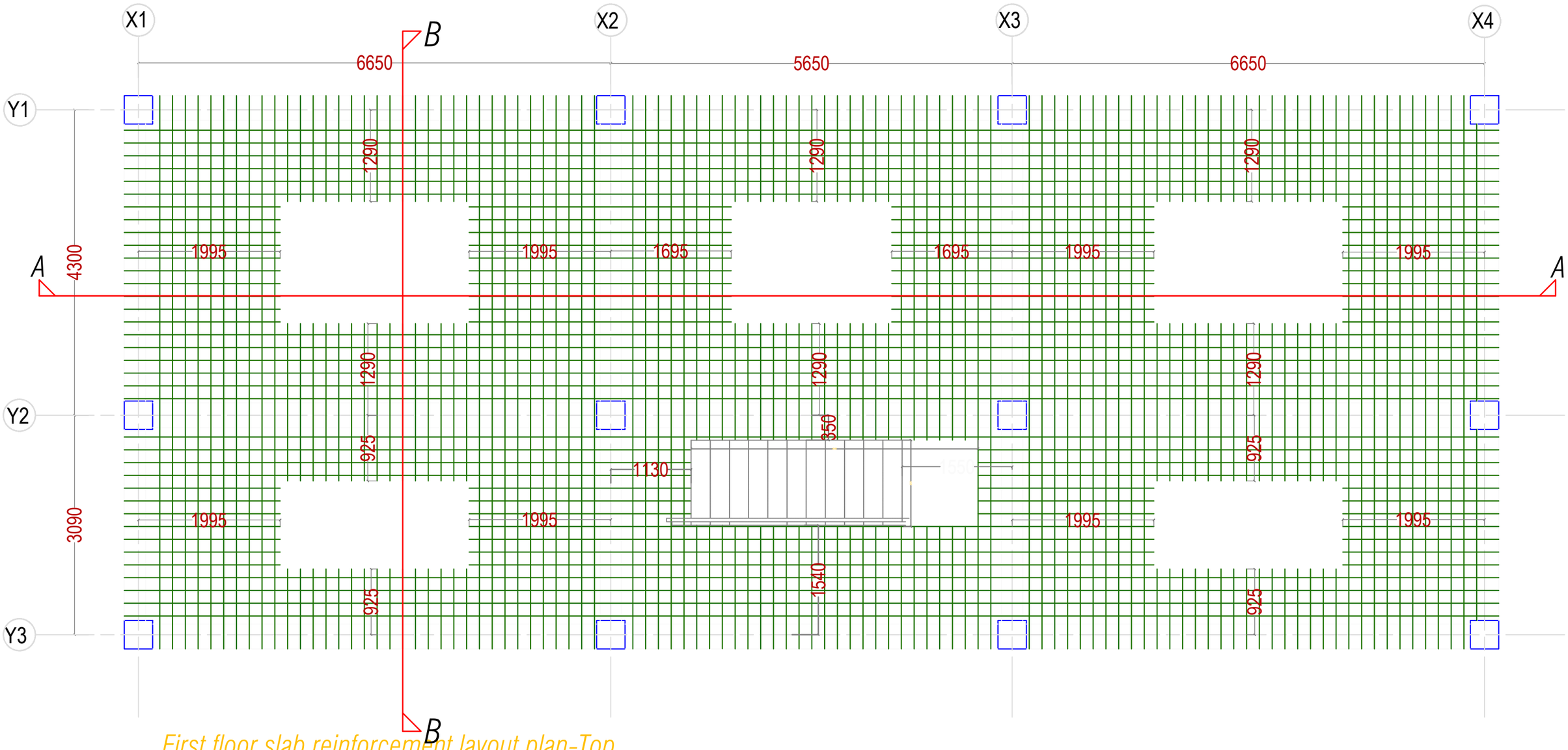

First floor slab reinforcement layout plan-Top

Khorlochhu	STRUCTURAL DRAWING	NOTES	CHECKED	APPROVED	DATE	DRAWING NO.
	PROJECT TITLE: Construction of Doksum Primary School	1. ALL DIMENSIONS ARE IN MILLIMETER & ELEVATION IN METER UNLESS SPECIFIED OTHERWISE. 2. ALL DIMENSIONS MEASURE UNFINISHED SURFACES UNLESS SPECIFIED OTHERWISE. 3. DIMENSIONS ARE TO BE READ AND NOT SCALED OFF. 4. ANY DISCREPANCIES IN THE DRAWING ARE TO BE BROUGHT TO THE IMMEDIATE NOTICE OF THE SUPERVISION TEAM.				STR_20
	DRAWING TITLE: FIRST_FLOOR_SLAB_LAYOUT				MARCH, 2026	SCALE: NTS

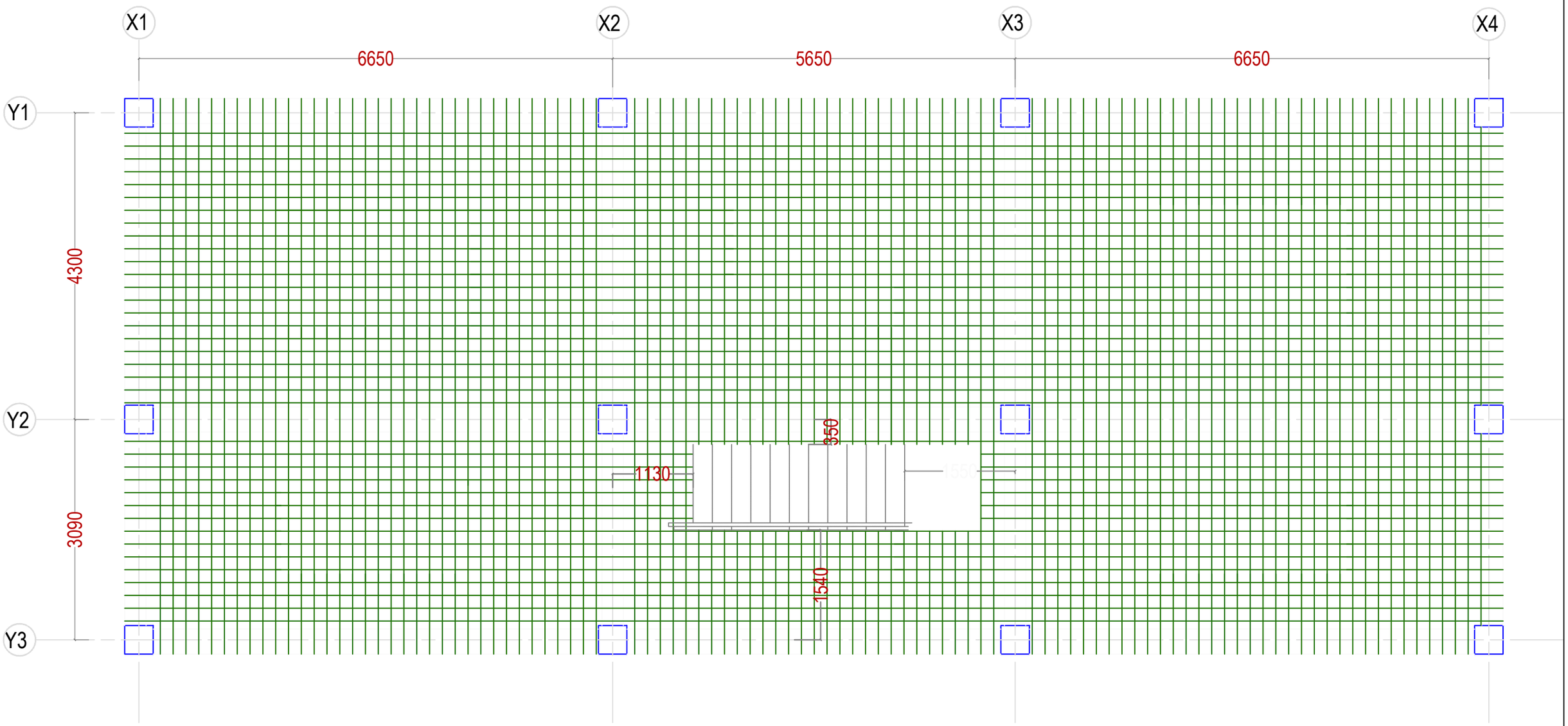

First floor slab reinforcement layout plan-Bottom

Khorlochhu	**STRUCTURAL DRAWING**	**NOTES**	**CHECKED**	**APPROVED**	**DATE**	**DRAWING NO.**
	PROJECT TITLE / **DRAWING TITLE**	1. ALL DIMENSIONS ARE IN MILLIMETER & ELEVATION IN METER UNLESS SPECIFIED OTHERWISE. 2. ALL DIMENSIONS MEASURE UNFINISHED SURFACES UNLESS SPECIFIED OTHERWISE. 3. DIMENSIONS ARE TO BE READ AND NOT SCALED OFF. 4. ANY DISCREPANCIES IN THE DRAWING ARE TO BE BROUGHT TO THE IMMEDIATE NOTICE OF THE SUPERVISION TEAM.				**STR_21**
	Construction of Doksum Primary School / **FIRST_FLOOR_SLAB_LAYOUT**				MARCH, 2026	**SCALE** NTS

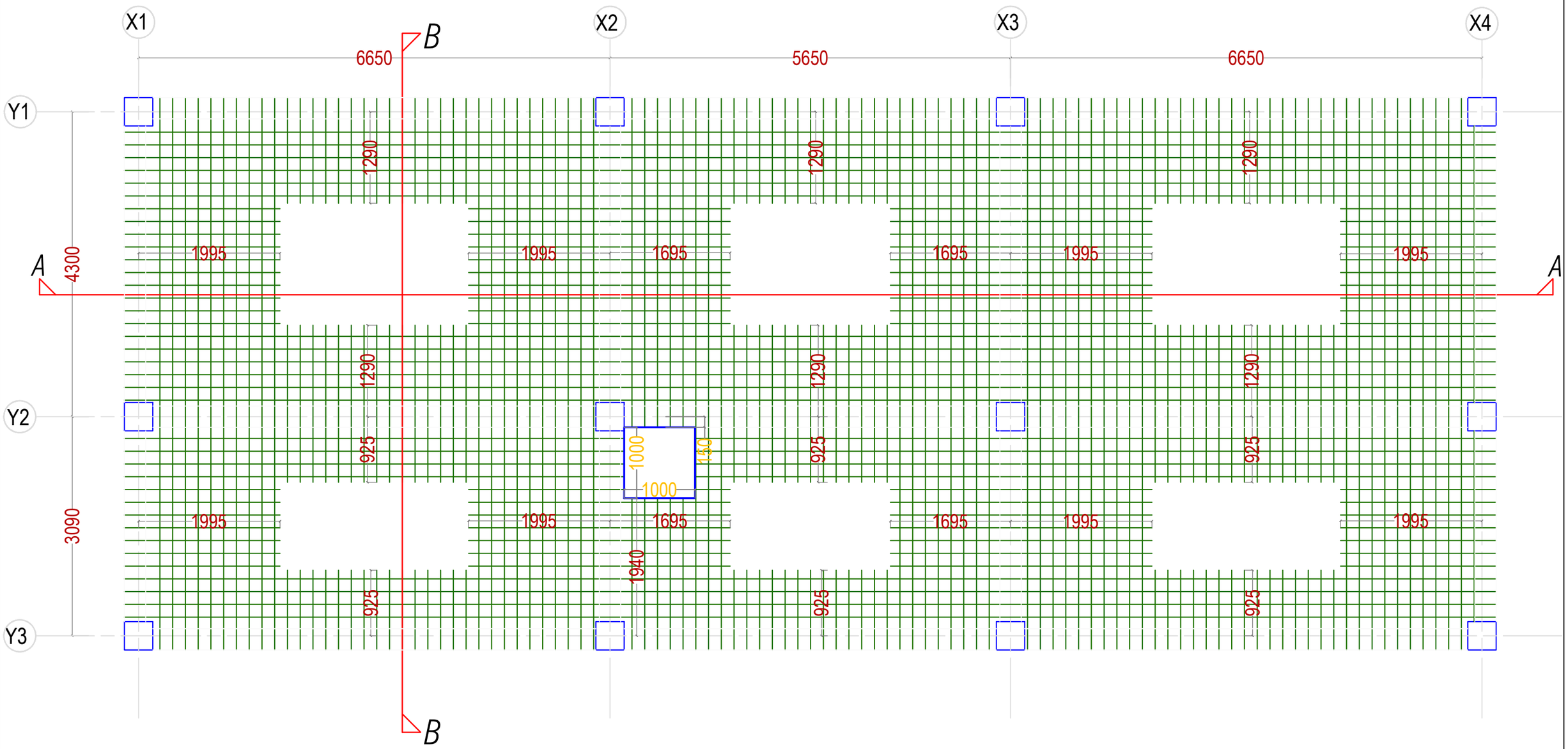

Roof floor slab reinforcement layout plan-Top

Khorlochhu	STRUCTURAL DRAWING	NOTES	CHECKED	APPROVED	DATE	DRAWING NO.
	PROJECT TITLE: Construction of Doksum Primary School	1. ALL DIMENSIONS ARE IN MILLIMETER & ELEVATION IN METER UNLESS SPECIFIED OTHERWISE. 2. ALL DIMENSIONS MEASURE UNFINISHED SURFACES UNLESS SPECIFIED OTHERWISE. 3. DIMENSIONS ARE TO BE READ AND NOT SCALED OFF. 4. ANY DISCREPANCIES IN THE DRAWING ARE TO BE BROUGHT TO THE IMMEDIATE NOTICE OF THE SUPERVISION TEAM.				STR_22
	DRAWING TITLE: ROOF_SLAB_LAYOUT				MARCH, 2026	SCALE: NTS

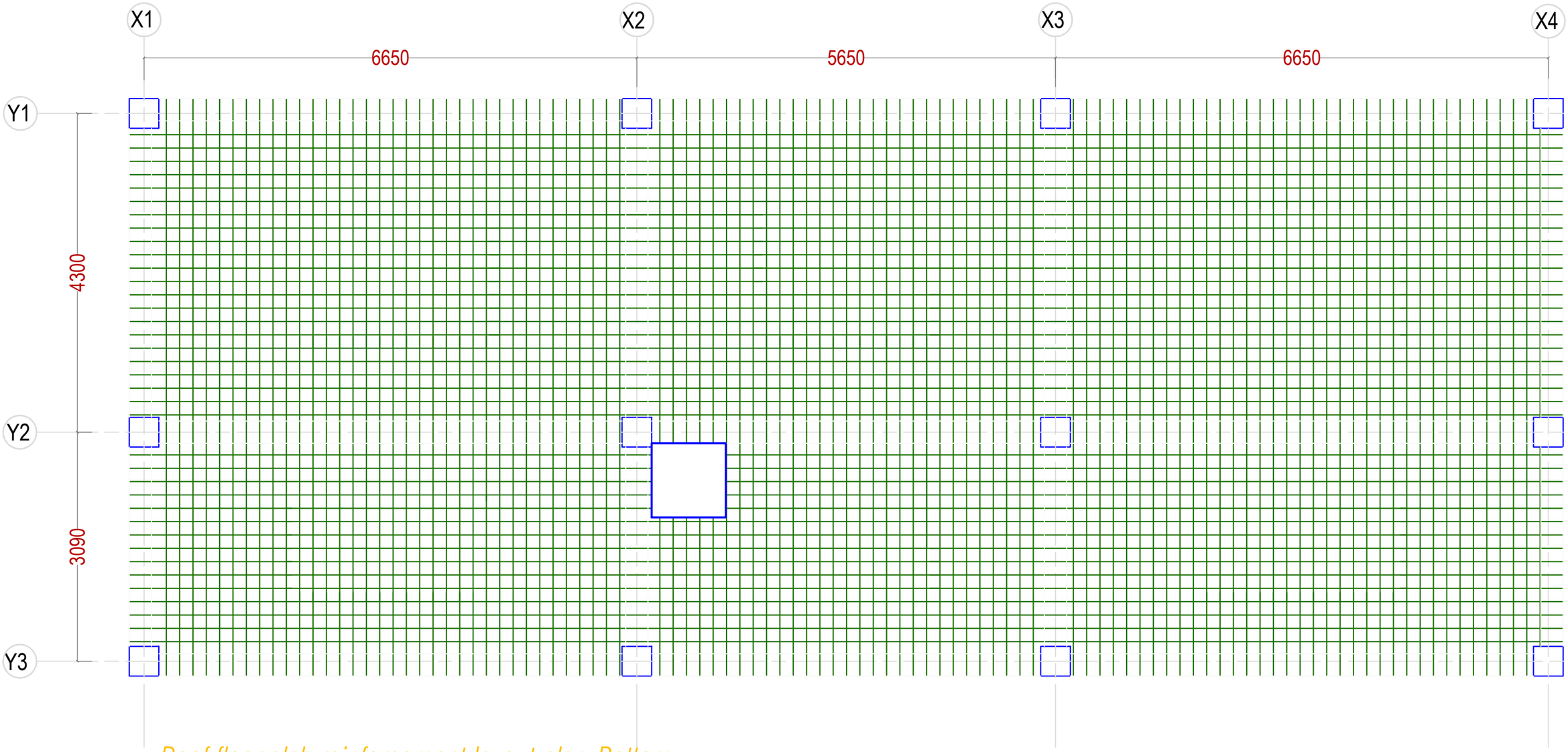

Roof floor slab reinforcement layout plan-Bottom

Khorlochhu	**STRUCTURAL DRAWING**	**NOTES**	**CHECKED**	**APPROVED**	**DATE**	**DRAWING NO.**
	PROJECT TITLE / **DRAWING TITLE**	1. ALL DIMENSIONS ARE IN MILLIMETER & ELEVATION IN METER UNLESS SPECIFIED OTHERWISE. 2. ALL DIMENSIONS MEASURE UNFINISHED SURFACES UNLESS SPECIFIED OTHERWISE. 3. DIMENSIONS ARE TO BE READ AND NOT SCALED OFF. 4. ANY DISCREPANCIES IN THE DRAWING ARE TO BE BROUGHT TO THE IMMEDIATE NOTICE OF THE SUPERVISION TEAM.				**STR_23**
	Construction of Doksum Primary School / **ROOF_SLAB_LAYOUT**				MARCH, 2026	**SCALE**
						NTS

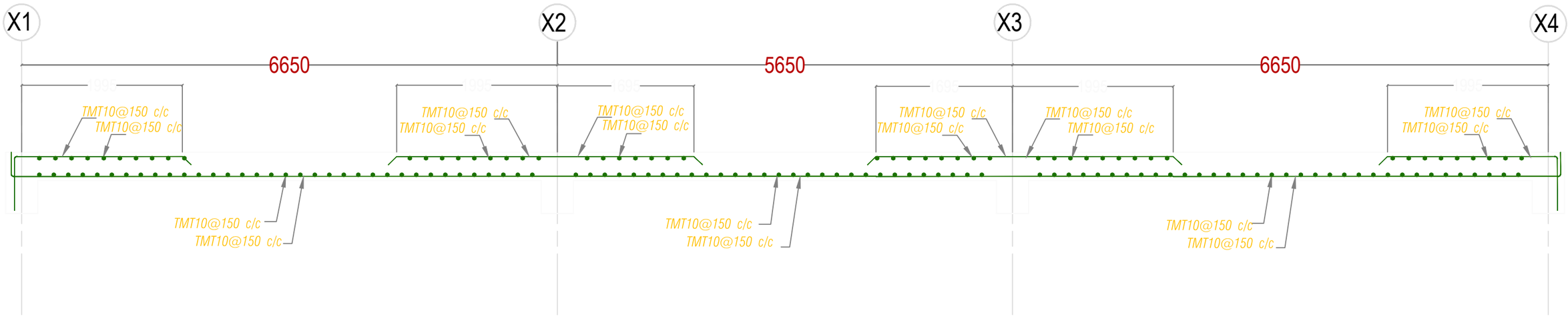

Slab Details at Section A-A

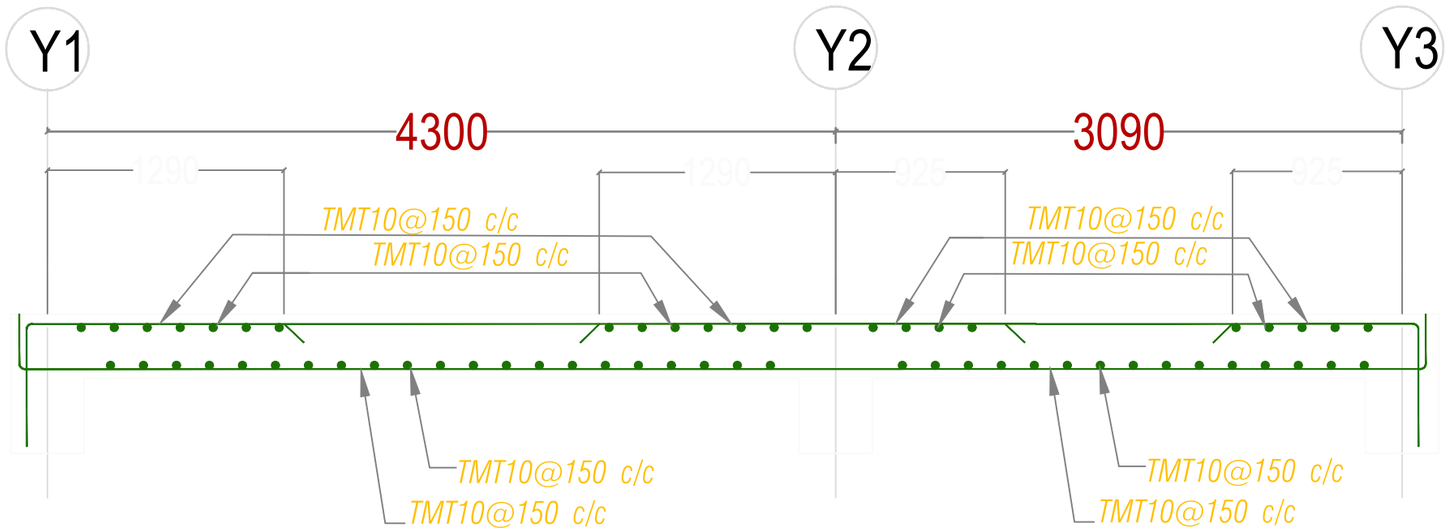

Slab Details at Section B-B

Khorlochhu	STRUCTURAL DRAWING		NOTES	CHECKED	APPROVED	DATE	DRAWING NO.
	PROJECT TITLE	DRAWING TITLE	1. ALL DIMENSIONS ARE IN MILLIMETER & ELEVATION IN METER UNLESS SPECIFIED OTHERWISE. 2. ALL DIMENSIONS MEASURE UNFINISHED SURFACES UNLESS SPECIFIED OTHERWISE. 3. DIMENSIONS ARE TO BE READ AND NOT SCALED OFF. 4. ANY DISCREPANCIES IN THE DRAWING ARE TO BE BROUGHT TO THE IMMEDIATE NOTICE OF THE SUPERVISION TEAM.				STR_24
	Construction of Doksum Primary School	SLAB_SECTION_A-A_&_SECTION_B-B				MARCH, 2026	SCALE NTS

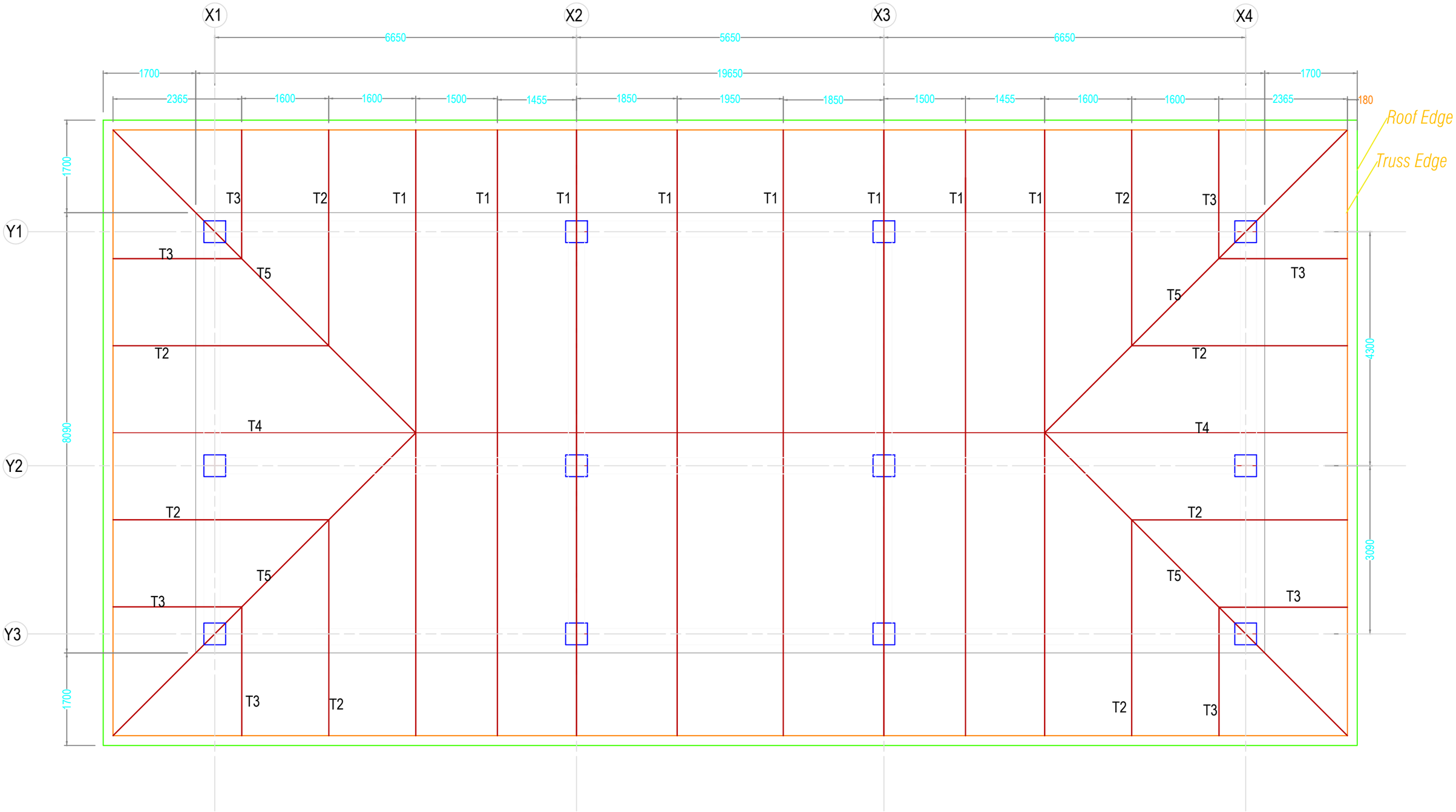

Truss layout plan

Khorlochhu	STRUCTURAL DRAWING	NOTES	CHECKED	APPROVED	DATE	DRAWING NO.
	PROJECT TITLE: Construction of Doksum Primary School	1. ALL DIMENSIONS ARE IN MILLIMETER & ELEVATION IN METER UNLESS SPECIFIED OTHERWISE. 2. ALL DIMENSIONS MEASURE UNFINISHED SURFACES UNLESS SPECIFIED OTHERWISE. 3. DIMENSIONS ARE TO BE READ AND NOT SCALED OFF. 4. ANY DISCREPANCIES IN THE DRAWING ARE TO BE BROUGHT TO THE IMMEDIATE NOTICE OF THE SUPERVISION TEAM.				STR_25
	DRAWING TITLE: MAIN_ROOF_TRUSS_LAYOUT				MARCH, 2026	SCALE: NTS

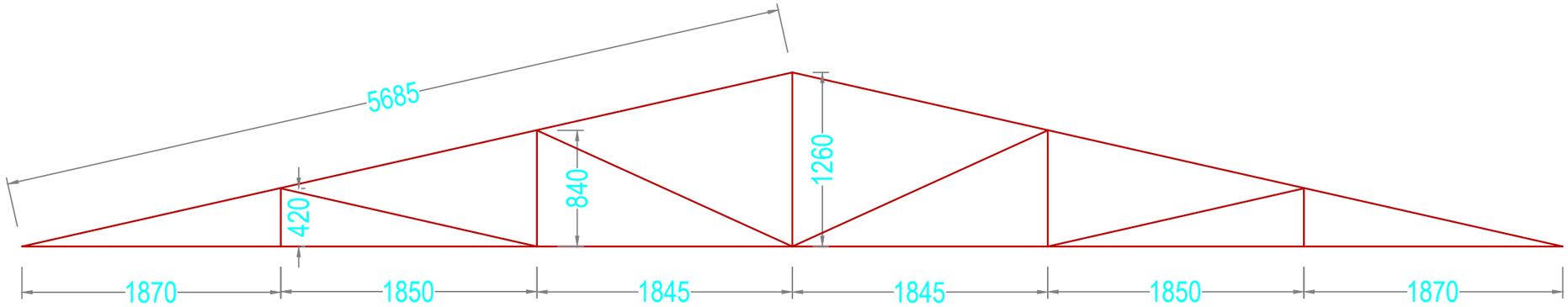

Truss T1

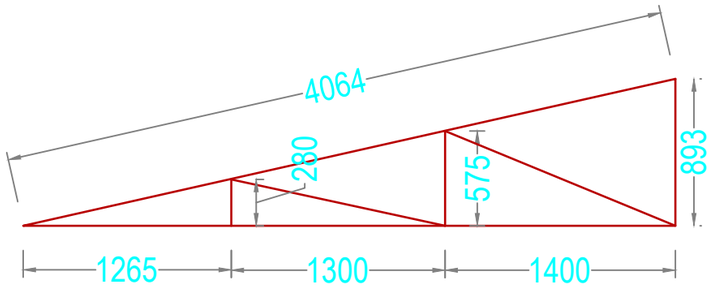

Truss T2

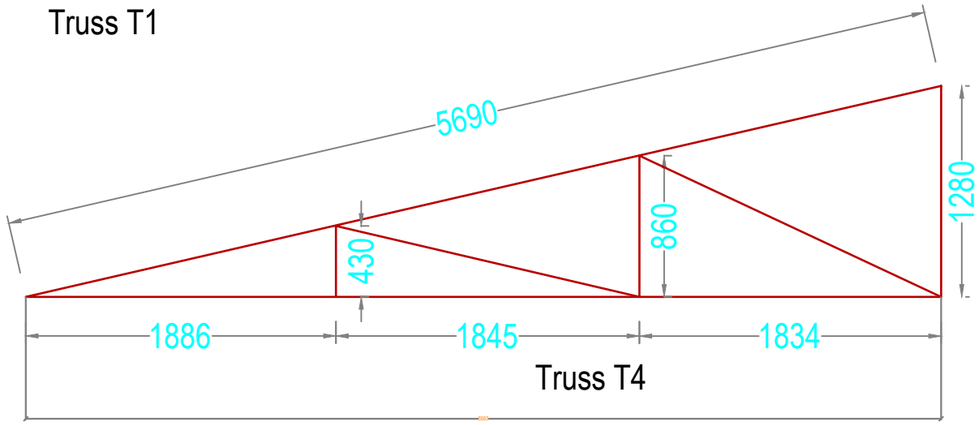

Truss T4

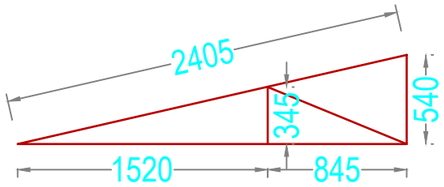

Truss T3

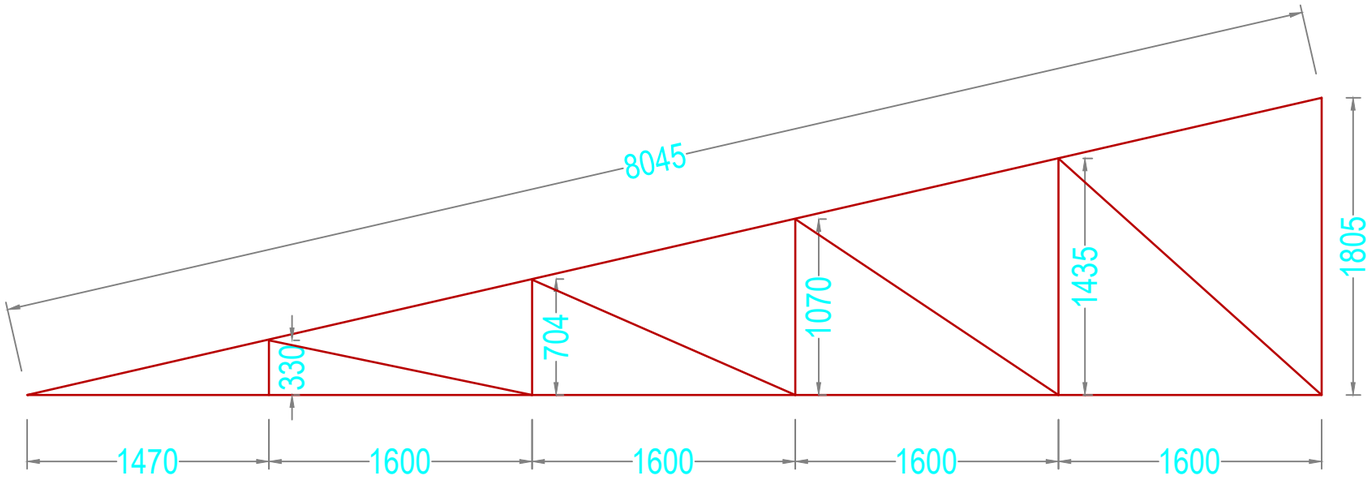

Truss T5

Khorlochhu

STRUCTURAL DRAWING

PROJECT TITLE	DRAWING TITLE
Construction of Doksum Primary School	TRUSS_DETAILS

NOTES

1. ALL DIMENSIONS ARE IN MILLIMETER & ELEVATION IN METER UNLESS SPECIFIED OTHERWISE.
2. ALL DIMENSIONS MEASURE UNFINISHED SURFACES UNLESS SPECIFIED OTHERWISE.
3. DIMENSIONS ARE TO BE READ AND NOT SCALED OFF.
4. ANY DISCREPANCIES IN THE DRAWING ARE TO BE BROUGHT TO THE IMMEDIATE NOTICE OF THE SUPERVISION TEAM.

CHECKED	APPROVED	DATE	DRAWING NO.
			STR_26
		MARCH, 2026	SCALE
			NTS

SCHEDULE OF TRUSS MEMBERS

SL.No	MEMBER	NOMINAL BORE (mm)	OUTSIDE DIAMETER (mm)	THICKNESS (mm)	CLASS
1	MAIN TIE	50	60.3	3.6	MEDIUM
2	RAFTER	50	60.3	3.6	MEDIUM
3	STRUT	40	48.3	3.2	MEDIUM
4	PURLIN	40	48.3	3.2	MEDIUM

NOTE: PURLINS SHALL BE PROVIDED @ 1200 mm C/C ,
TUBULAR STEEL OF GRADE YST22 TO BE USED

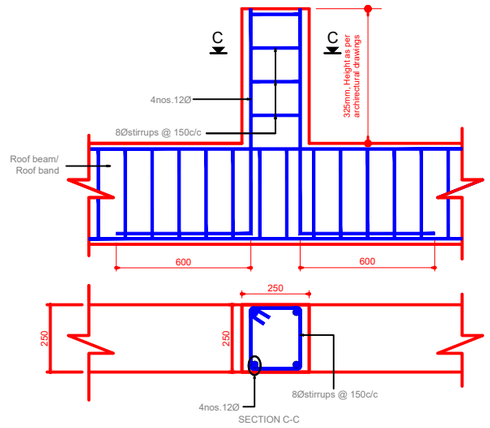

RC PROP AND ROOF BEAM CONNECTION DETAIL

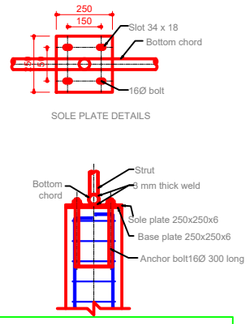

SOLE PLATE DETAILS

NOTE:
1. All the trusses will be supported on the R.C props.
2. All the R.C props (250 X 250) is framed into roof beam.
3. Prop height is as per architectural drawing.
4. The column extended above the roof beams as per architectural drawing will act as prop wherever the truss fails.

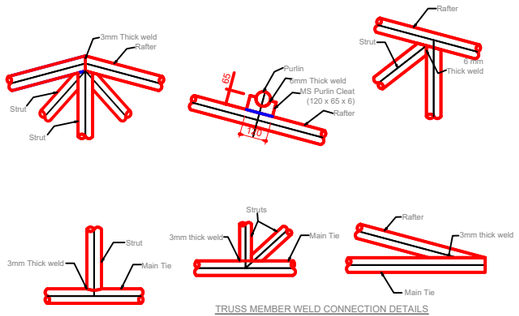

TRUSS MEMBER WELD CONNECTION DETAILS

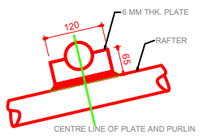

PURLIN CLEAT

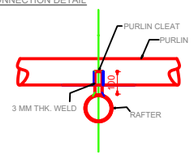

CONNECTION OF PURLIN TO RAFTER

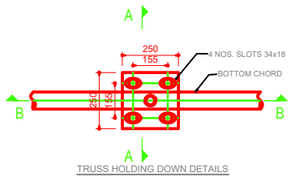

TRUSS HOLDING DOWN DETAILS

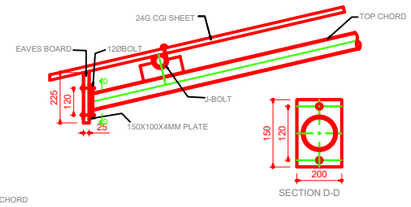

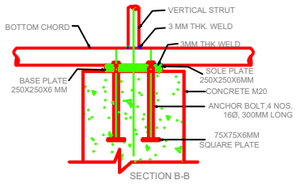

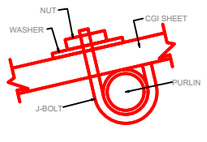

CONNECTION OF CGI SHEET TO PURLIN

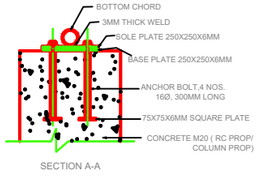

NOTE:
1) All dimensions are in mm unless stated otherwise.
2) Connection details shown are for different types of joints and to be taken same for similar joints.
3) Height of RC prop to be taken as per Architectural drawings.
4) All members of truss joint shall be in welding.
5) Fabrication of truss must be done at site.
6) Welding shall confirm to IS 816-1989 and thickness shall be 3mm.
7) All Steel Tube Sections and Plates shall confirm to IS 1161-1968 & IS 2062-1984.
8) All MS Nuts & Bolts shall confirm to IS 1363-1984 and Washers shall confirm to IS 5374-1975.

Khorlochhu

STRUCTURAL DRAWING

PROJECT TITLE	DRAWING TITLE
Construction of Doksum Primary School	TRUSS_DETAILS

NOTES

1. ALL DIMENSIONS ARE IN MILLIMETER & ELEVATION IN METER UNLESS SPECIFIED OTHERWISE.
2. ALL DIMENSIONS MEASURE UNFINISHED SURFACES UNLESS SPECIFIED OTHERWISE.
3. DIMENSIONS ARE TO BE READ AND NOT SCALED OFF.
4. ANY DISCREPANCIES IN THE DRAWING ARE TO BE BROUGHT TO THE IMMEDIATE NOTICE OF THE SUPERVISION TEAM.

CHECKED	APPROVED	DATE	DRAWING NO.
			STR_27
		MARCH, 2026	SCALE
			NTS

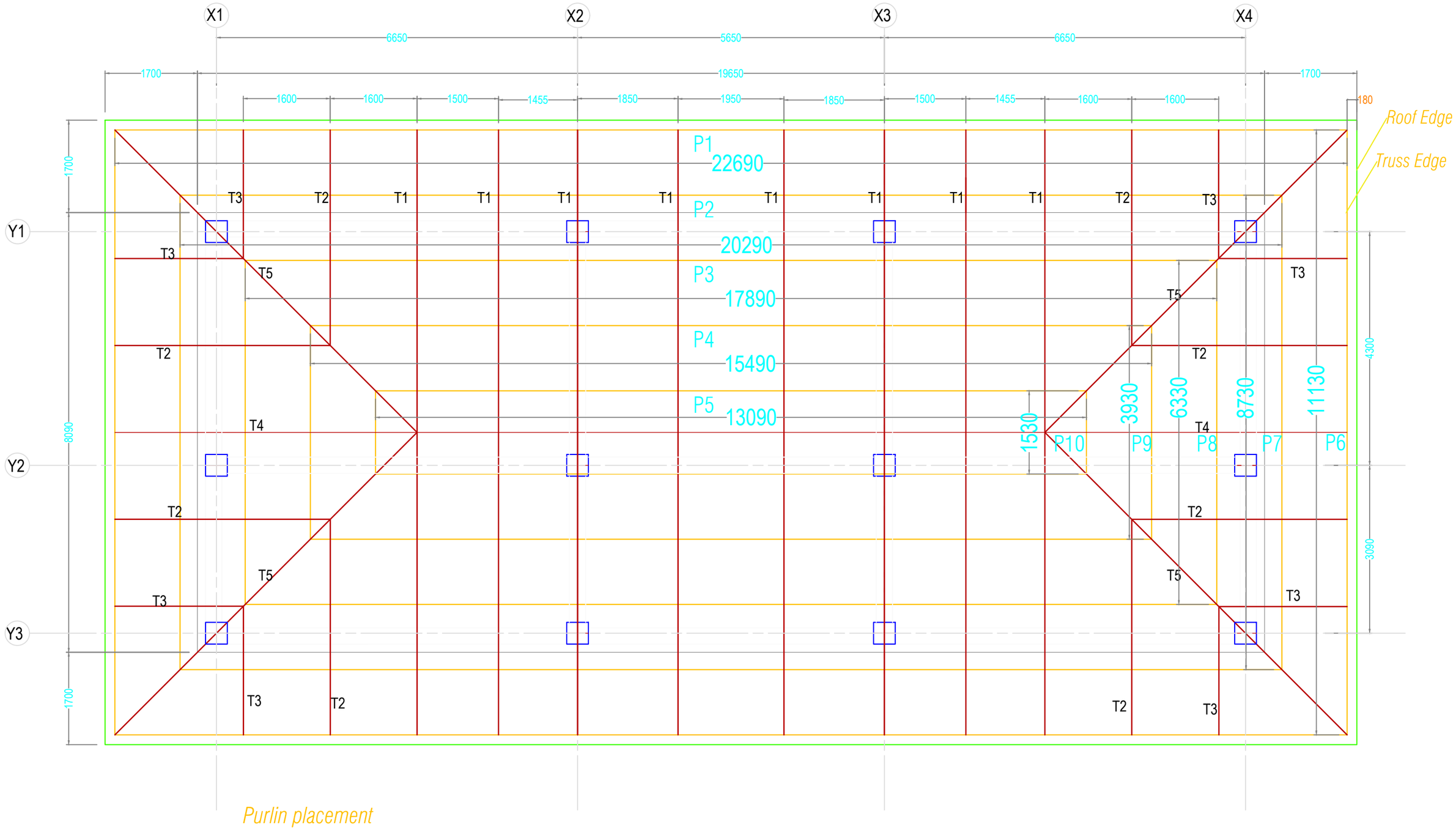

Purlin placement

Khorlochhu	STRUCTURAL DRAWING	NOTES	CHECKED	APPROVED	DATE	DRAWING NO.
	PROJECT TITLE: Construction of Doksum Primary School	1. ALL DIMENSIONS ARE IN MILLIMETER & ELEVATION IN METER UNLESS SPECIFIED OTHERWISE. 2. ALL DIMENSIONS MEASURE UNFINISHED SURFACES UNLESS SPECIFIED OTHERWISE. 3. DIMENSIONS ARE TO BE READ AND NOT SCALED OFF. 4. ANY DISCREPANCIES IN THE DRAWING ARE TO BE BROUGHT TO THE IMMEDIATE NOTICE OF THE SUPERVISION TEAM.				STR_28
	DRAWING TITLE: PURLIN_LAYOUT				MARCH, 2026	SCALE: NTS

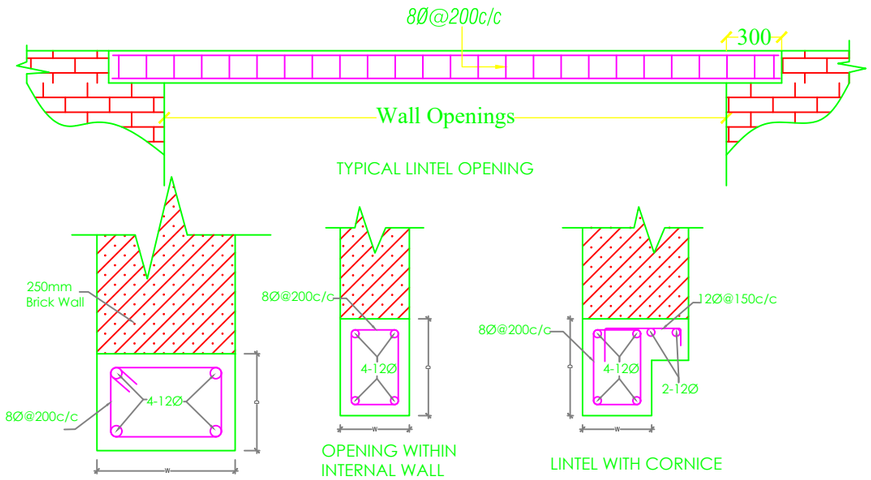

NOTE :

1. Depth (D) of Lintels is to be taken as shown in Architectural drawings, especially for main windows and should be taken as 150mm for all other Lintels.
2. Width (W) of Lintels is to be taken equal to the wall thickness.

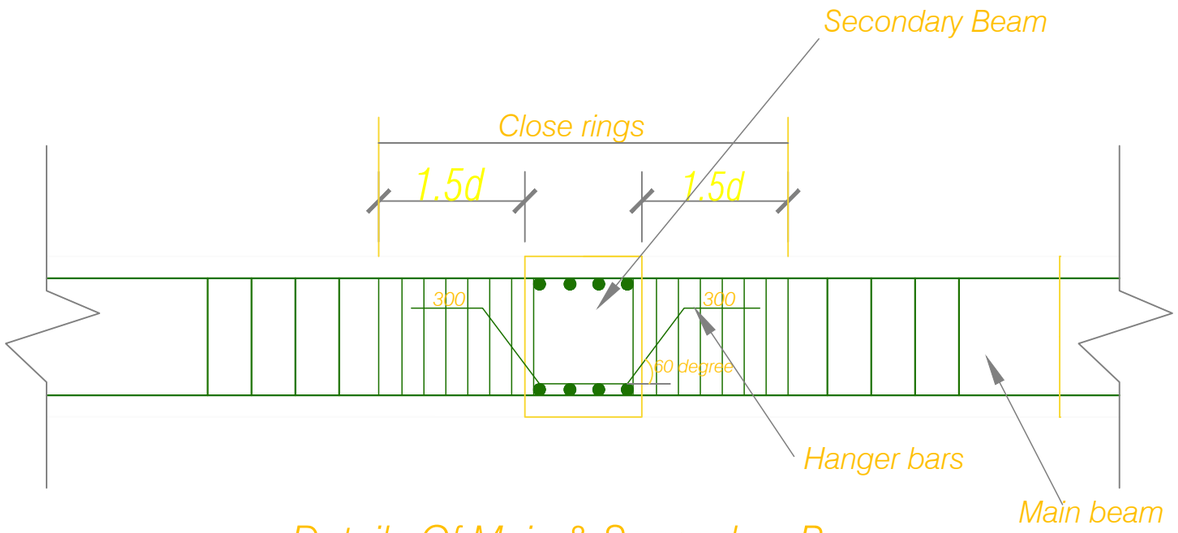

Details Of Main & Secondary Beam

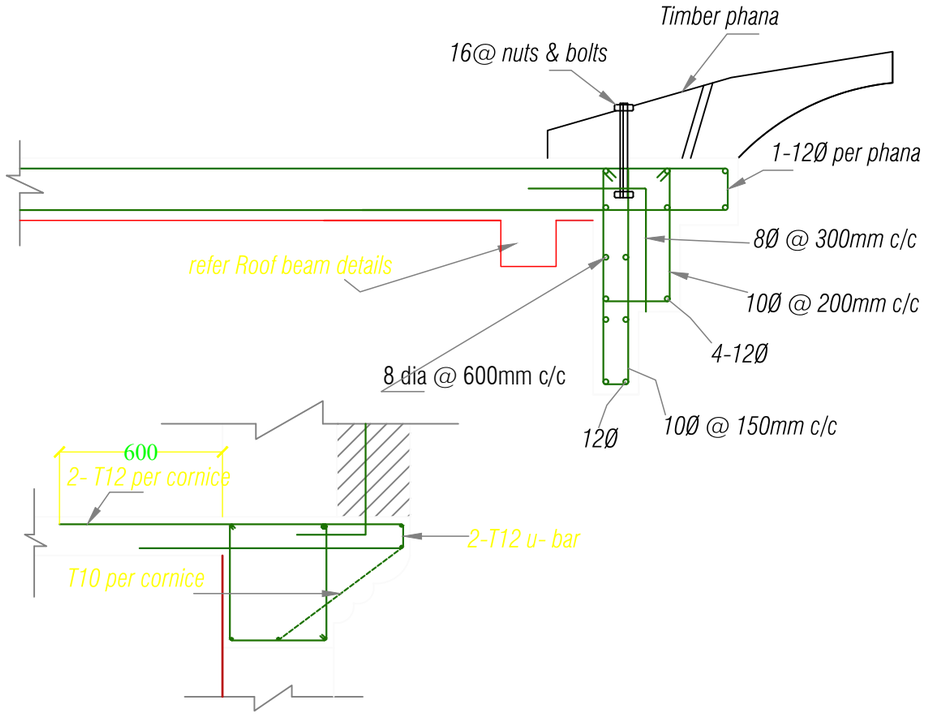

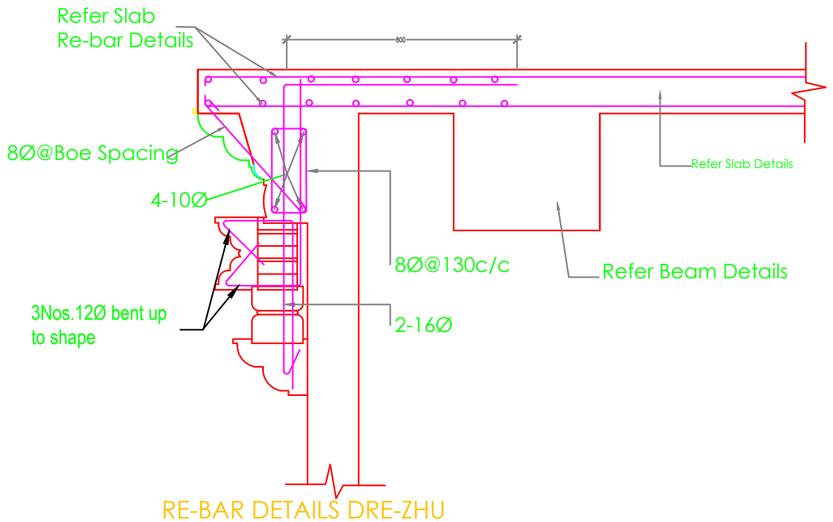

RE-BAR DETAILS DRE-ZHU

Khorlochhu	STRUCTURAL DRAWING	NOTES	CHECKED	APPROVED	DATE	DRAWING NO.
	PROJECT TITLE	1. ALL DIMENSIONS ARE IN MILLIMETER & ELEVATION IN METER UNLESS SPECIFIED OTHERWISE. 2. ALL DIMENSIONS MEASURE UNFINISHED SURFACES UNLESS SPECIFIED OTHERWISE. 3. DIMENSIONS ARE TO BE READ AND NOT SCALED OFF. 4. ANY DISCREPANCIES IN THE DRAWING ARE TO BE BROUGHT TO THE IMMEDIATE NOTICE OF THE SUPERVISION TEAM.				STR_29
	Construction of Doksum Primary School				MARCH, 2026	SCALE
	DRAWING TITLE					NTS
	LINTEL_DETAILS					

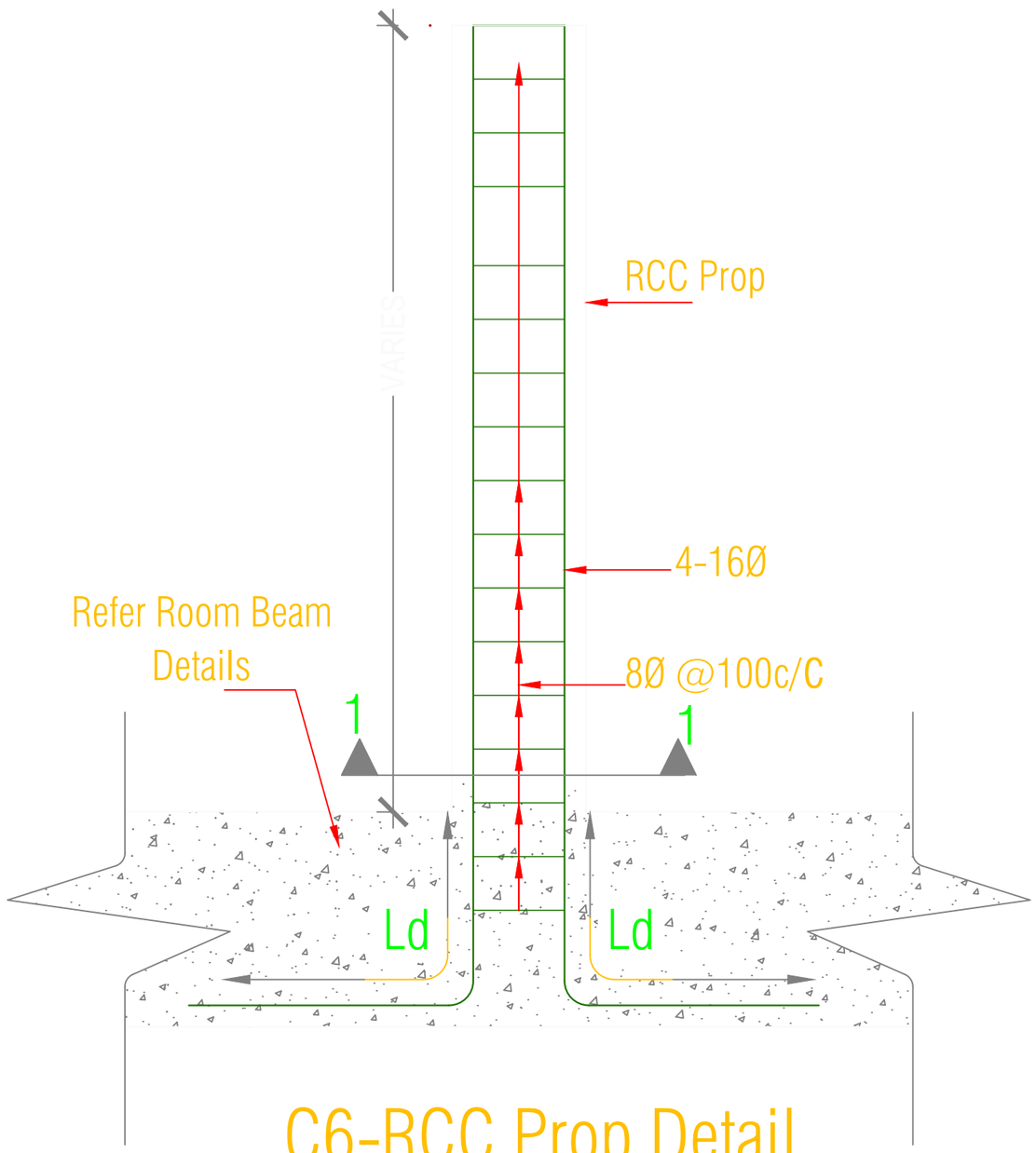

C6-RCC Prop Detail

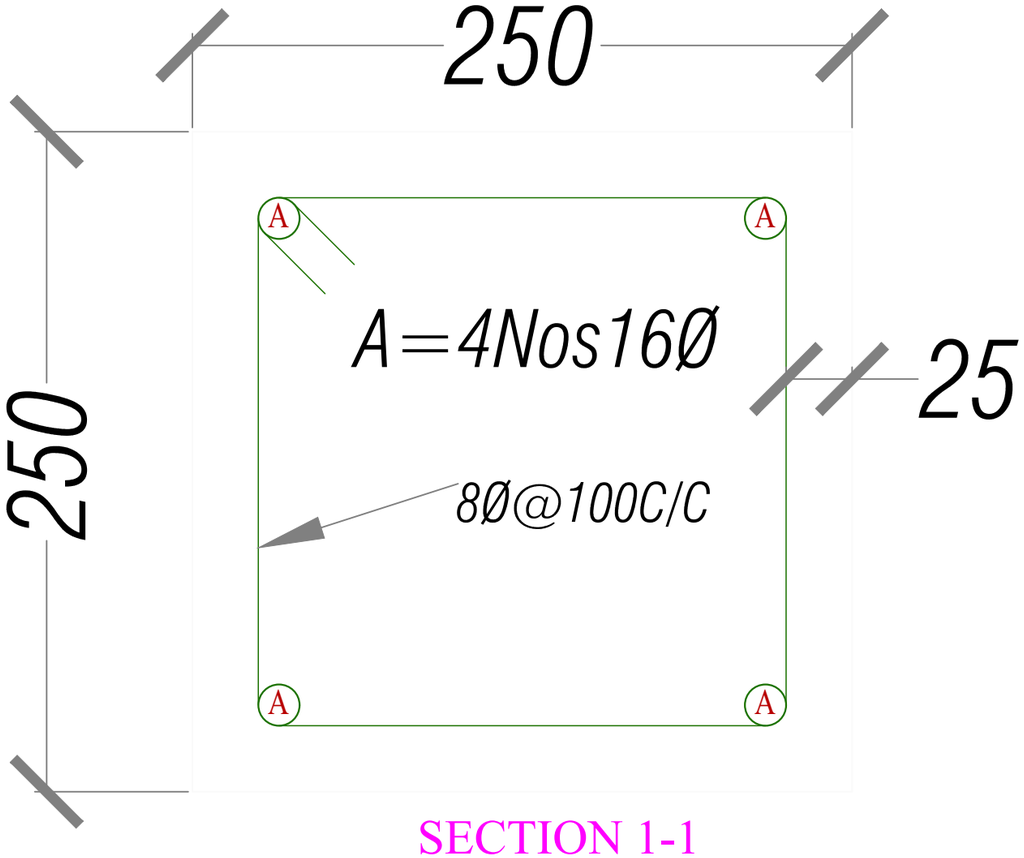

SECTION 1-1

Khorlochhu	STRUCTURAL DRAWING	NOTES	CHECKED	APPROVED	DATE	DRAWING NO.
	PROJECT TITLE: Construction of Doksum Primary School	DRAWING TITLE: RCC_PROP				STR_30
		1. ALL DIMENSIONS ARE IN MILLIMETER & ELEVATION IN METER UNLESS SPECIFIED OTHERWISE. 2. ALL DIMENSIONS MEASURE UNFINISHED SURFACES UNLESS SPECIFIED OTHERWISE. 3. DIMENSIONS ARE TO BE READ AND NOT SCALED OFF. 4. ANY DISCREPANCIES IN THE DRAWING ARE TO BE BROUGHT TO THE IMMEDIATE NOTICE OF THE SUPERVISION TEAM.			MARCH, 2026	SCALE: NTS

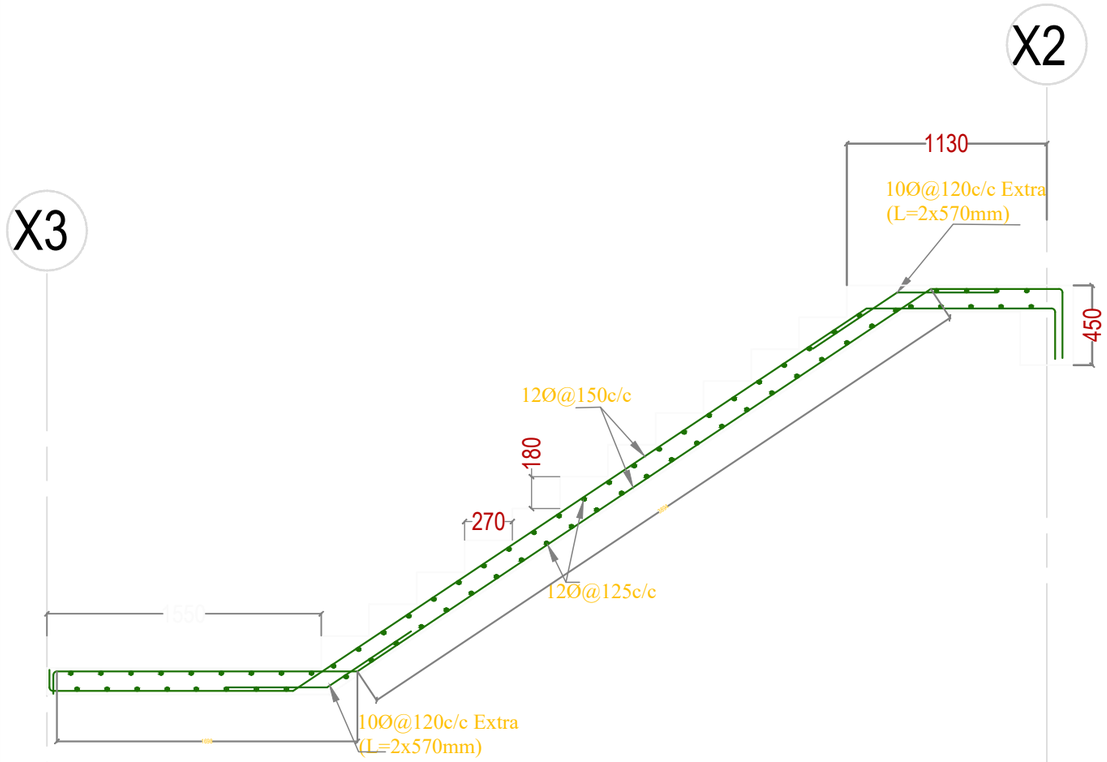

SECTION A-A

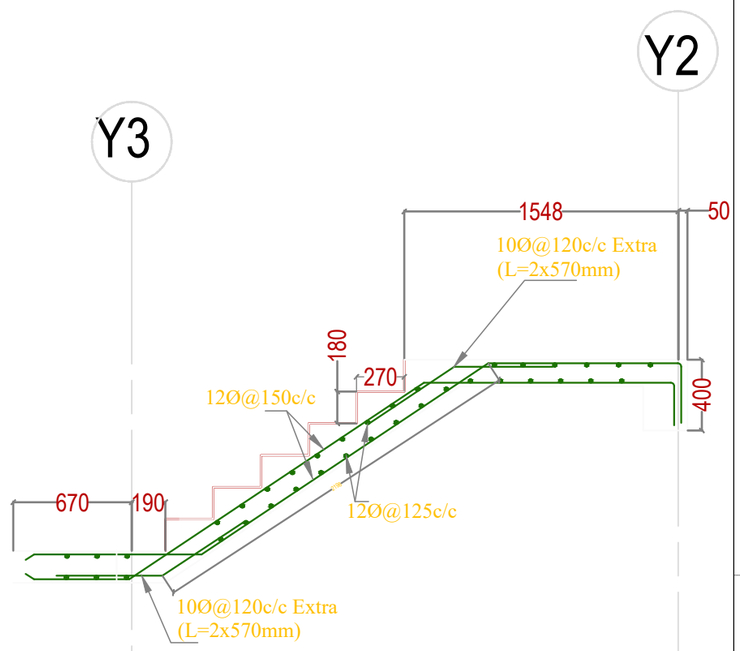

SECTION B-B

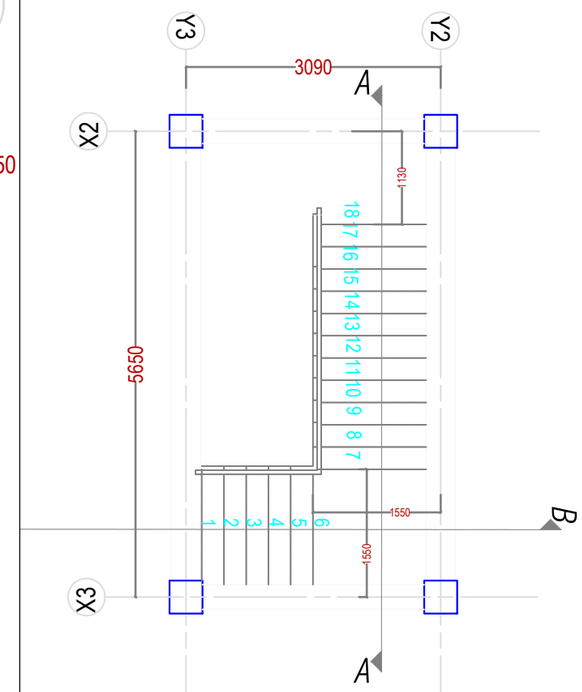

Staircase plan

Khorlochhu

STRUCTURAL DRAWING

PROJECT TITLE	DRAWING TITLE
Construction of Doksum Primary School	STAIRCASE_DETAILS

NOTES

1. ALL DIMENSIONS ARE IN MILLIMETER & ELEVATION IN METER UNLESS SPECIFIED OTHERWISE.
2. ALL DIMENSIONS MEASURE UNFINISHED SURFACES UNLESS SPECIFIED OTHERWISE.
3. DIMENSIONS ARE TO BE READ AND NOT SCALED OFF.
4. ANY DISCREPANCIES IN THE DRAWING ARE TO BE BROUGHT TO THE IMMEDIATE NOTICE OF THE SUPERVISION TEAM.

CHECKED	APPROVED	DATE	DRAWING NO.
			STR_31
		MARCH, 2026	SCALE
			NTS

ELECTRICAL DRAWINGS

ADMINISTRATION BLOCK

Owner - Khorlochhu Hydro Power Limited
Location - Doksum New Township, Trashiyangtse

Khorlochhu

SYMBOLS	SPECIFICATIONS
	60w,1200 sweep Ceiling fan
D	15W Led Ceiling Light
C	6W Led Ceiling Light
	20W Led Tube Light
	6A/10A Modular switches.
	5/6 Pin 16 Amps Switch/Socket Combined with indicator
	Switch Board with 6A Socket.
	Data Outlet Socket,RJ45 Modular type
	Telephone Outlet Socket, RJ11.
SDB	Sub Distribution Board,Double Door Type (SDB)
	Main Control Panel Board (MCPB)
JB	Telephone Terminal Cabinet (Junction Box)

Notes 1:

1. Light points wiring shall be with 1.5sq.mm PVC insulated copper conductor
2. Light supply circuit shall be done with 2.5sq.mm PVC insulated copper conductor
3. Power circuits shall be done with 4sq.mm PVC insulated copper conductor.
4. Different conduit lines shall be used for wiring with different phases.
5. Power points wiring below window shall not be dropped from above but supplied from below the window seal level.
6. Light switchboards shall be 1400mm from finished floor level to top.
7. Power sockets shall be 400mm from finished floor level to top except in Kitchen or toilets/bathrooms (wet area) where the height shall be 1400mm from floor to bottom and for air condition the height shall be 1750mm from finished floor level.
8. No power point shall be looped.
9. Main switch boards are to be flushed in the wall 230mm below the ceiling level.

Notes 2: (As recommended by service providers)

1. Telephone wiring shall be with 0.5Sq.mm PVC insulated and sheathed copper conductor.
2. Ducting to be at least 500mm away from electrical cable routes.
3. To provide bridging where telephone and electric cables cross.
4. Telephone terminal cabinet shall be 300x300x150mm with hole punches to receive 25mm dia conduit on all four sides and mounted at 2500mm above floor level.
5. Cable ducting shall be provided with 25mm dia PVC conduit and shall be common for drawing of TV cables.
6. RJ-11 sockets shall be provided for telephone points.
7. To supply direct lines for all the rooms where points are marked, from the terminal cabinet.
8. The incoming lines shall be brought and connected to incoming side of the terminal cabinet from where lines to all the rooms commence

Khorlochhu

ELECTRICAL DRAWING

PROJECT TITLE	DRAWING TITLE
Construction of Doksum Primary School	NOTE_&_SPECIFICATION

NOTES

1. ALL DIMENSIONS ARE IN MILLIMETER & ELEVATION IN METER UNLESS SPECIFIED OTHERWISE.
2. ALL DIMENSIONS MEASURE UNFINISHED SURFACES UNLESS SPECIFIED OTHERWISE.
3. DIMENSIONS ARE TO BE READ AND NOT SCALED OFF.
4. ANY DISCREPANCIES IN THE DRAWING ARE TO BE BROUGHT TO THE IMMEDIATE NOTICE OF THE SUPERVISION TEAM.

CHECKED	APPROVED	DATE	DRAWING NO.
			EL_1
		MARCH, 2026	SCALE
			NTS

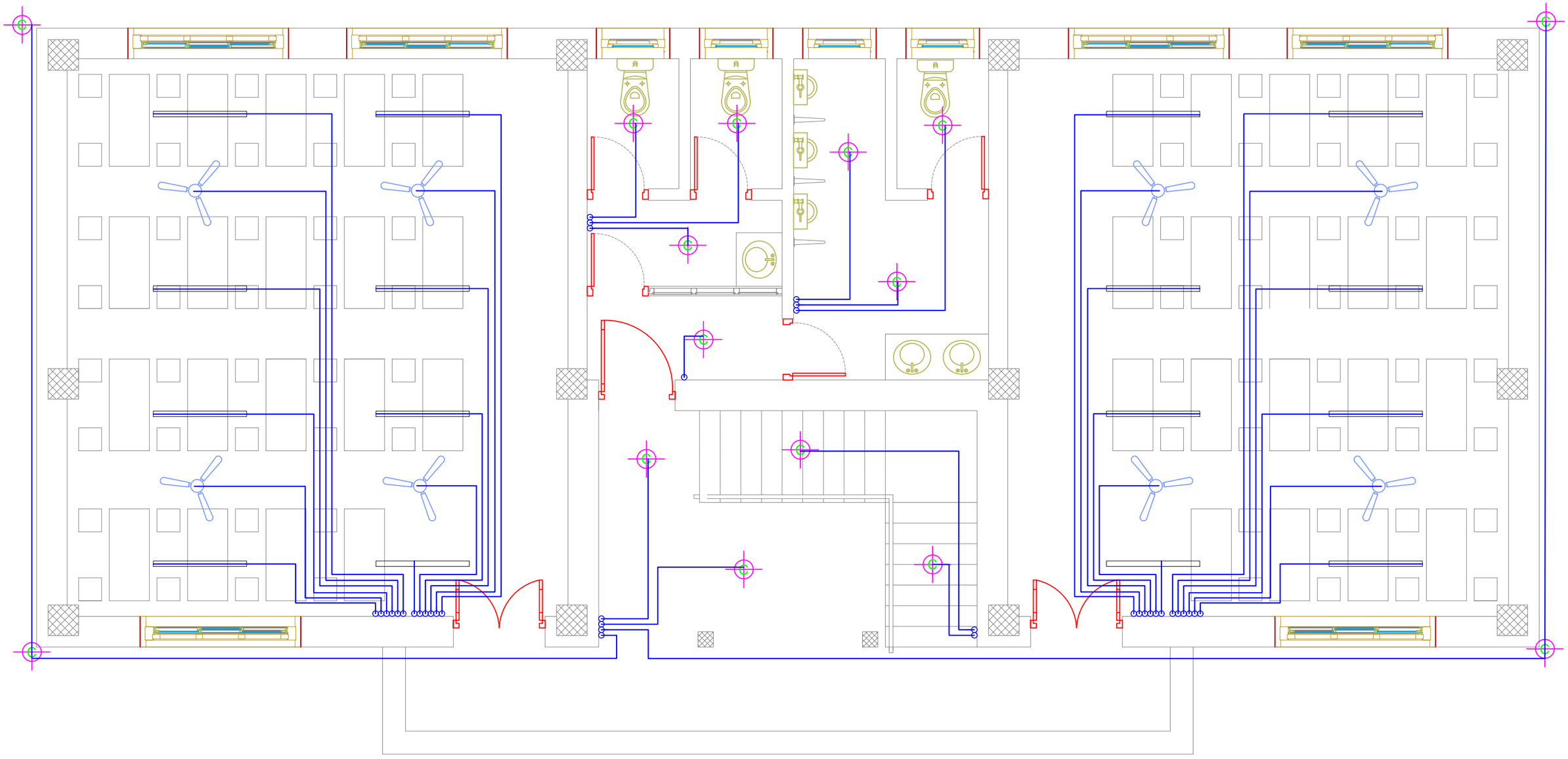

ELECTRICAL DRAWING

Khorlochhu

PROJECT TITLE	DRAWING TITLE
Construction of Doksum Primary School	FITTINGS_LAYOUT_GROUND_FLOOR

NOTES

1. ALL DIMENSIONS ARE IN MILLIMETER & ELEVATION IN METER UNLESS SPECIFIED OTHERWISE.
2. ALL DIMENSIONS MEASURE UNFINISHED SURFACES UNLESS SPECIFIED OTHERWISE.
3. DIMENSIONS ARE TO BE READ AND NOT SCALED OFF.
4. ANY DISCREPANCIES IN THE DRAWING ARE TO BE BROUGHT TO THE IMMEDIATE NOTICE OF THE SUPERVISION TEAM.

CHECKED	APPROVED	DATE	DRAWING NO.
			EL_2
		MARCH, 2026	SCALE
			NTS

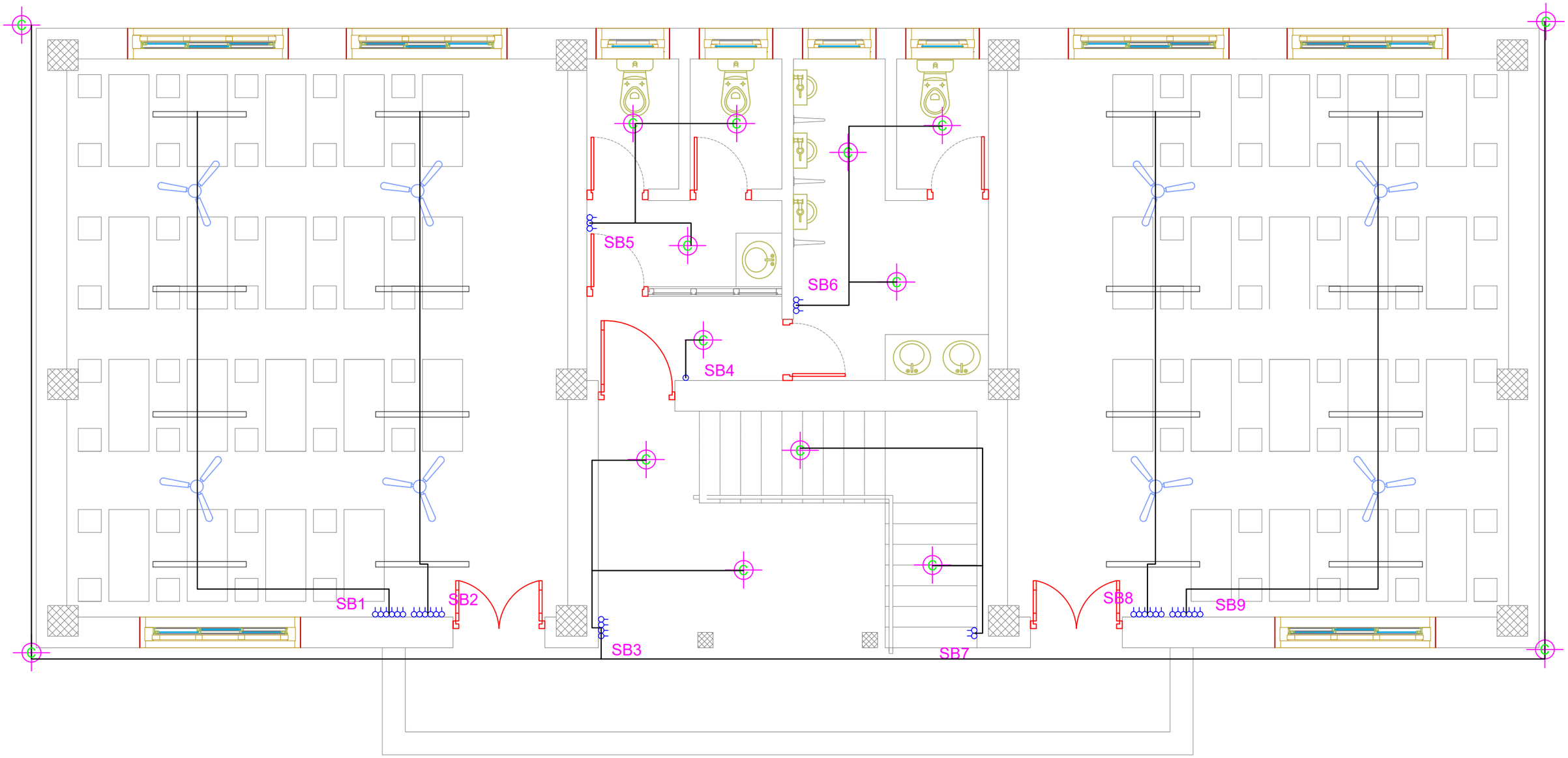

ELECTRICAL DRAWING

PROJECT TITLE	DRAWING TITLE
Construction of Doksum Primary School	FITTINGS_&_CONDUCT_LAYOUT_GROUND_FLOOR

NOTES

1. ALL DIMENSIONS ARE IN MILLIMETER & ELEVATION IN METER UNLESS SPECIFIED OTHERWISE.
2. ALL DIMENSIONS MEASURE UNFINISHED SURFACES UNLESS SPECIFIED OTHERWISE.
3. DIMENSIONS ARE TO BE READ AND NOT SCALED OFF.
4. ANY DISCREPANCIES IN THE DRAWING ARE TO BE BROUGHT TO THE IMMEDIATE NOTICE OF THE SUPERVISION TEAM.

CHECKED	APPROVED	DATE	DRAWING NO.
			EL_3
		MARCH, 2026	SCALE
			NTS

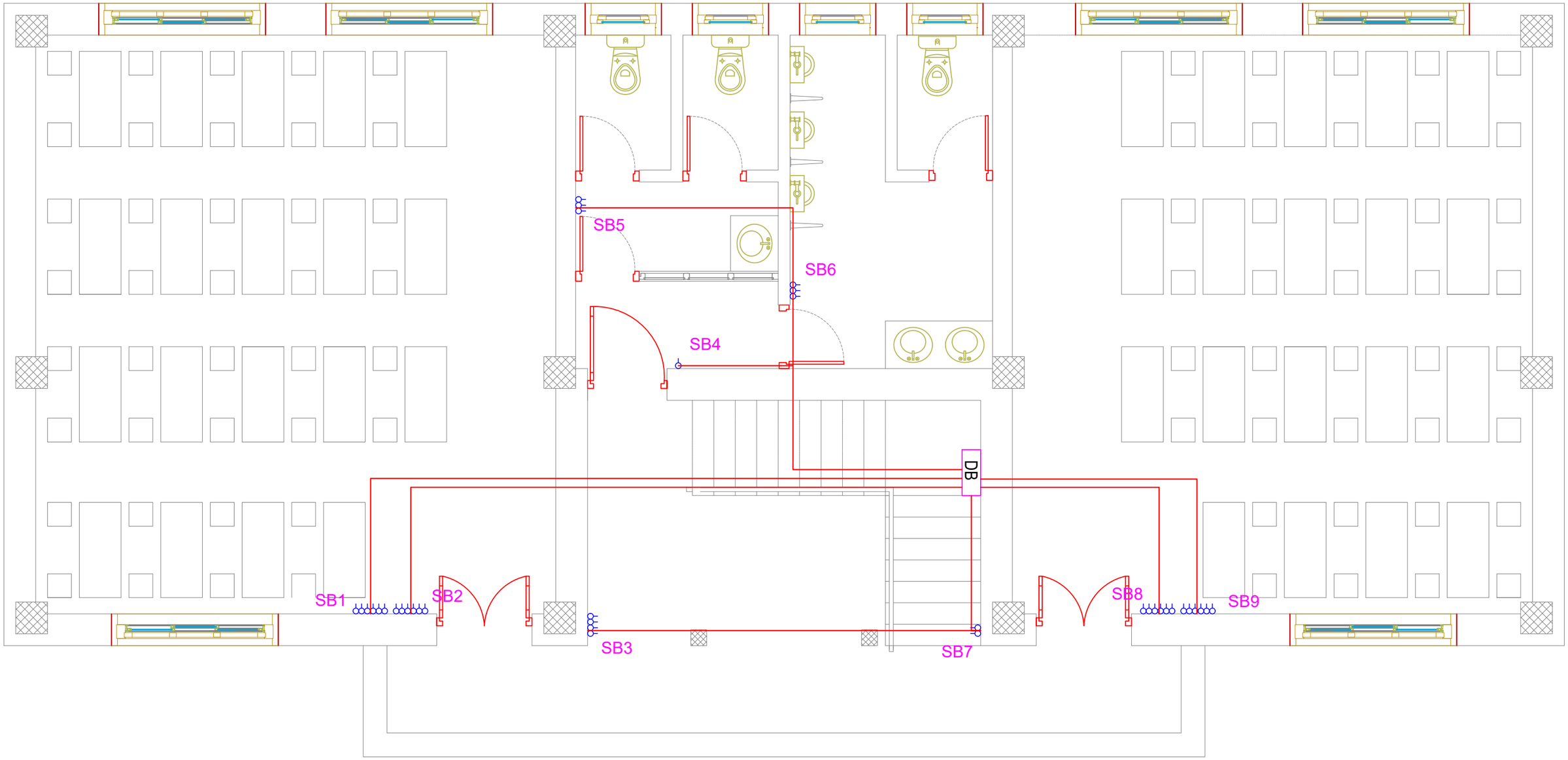

Khorlochhu

ELECTRICAL DRAWING

PROJECT TITLE	DRAWING TITLE
Construction of Doksum Primary School	LIGHT_CIRCUITS_LAYOUT_GROUND_FLOOR

NOTES

1. ALL DIMENSIONS ARE IN MILLIMETER & ELEVATION IN METER UNLESS SPECIFIED OTHERWISE.
2. ALL DIMENSIONS MEASURE UNFINISHED SURFACES UNLESS SPECIFIED OTHERWISE.
3. DIMENSIONS ARE TO BE READ AND NOT SCALED OFF.
4. ANY DISCREPANCIES IN THE DRAWING ARE TO BE BROUGHT TO THE IMMEDIATE NOTICE OF THE SUPERVISION TEAM.

CHECKED	APPROVED	DATE	DRAWING NO.
			EL_4
		MARCH, 2026	SCALE
			NTS

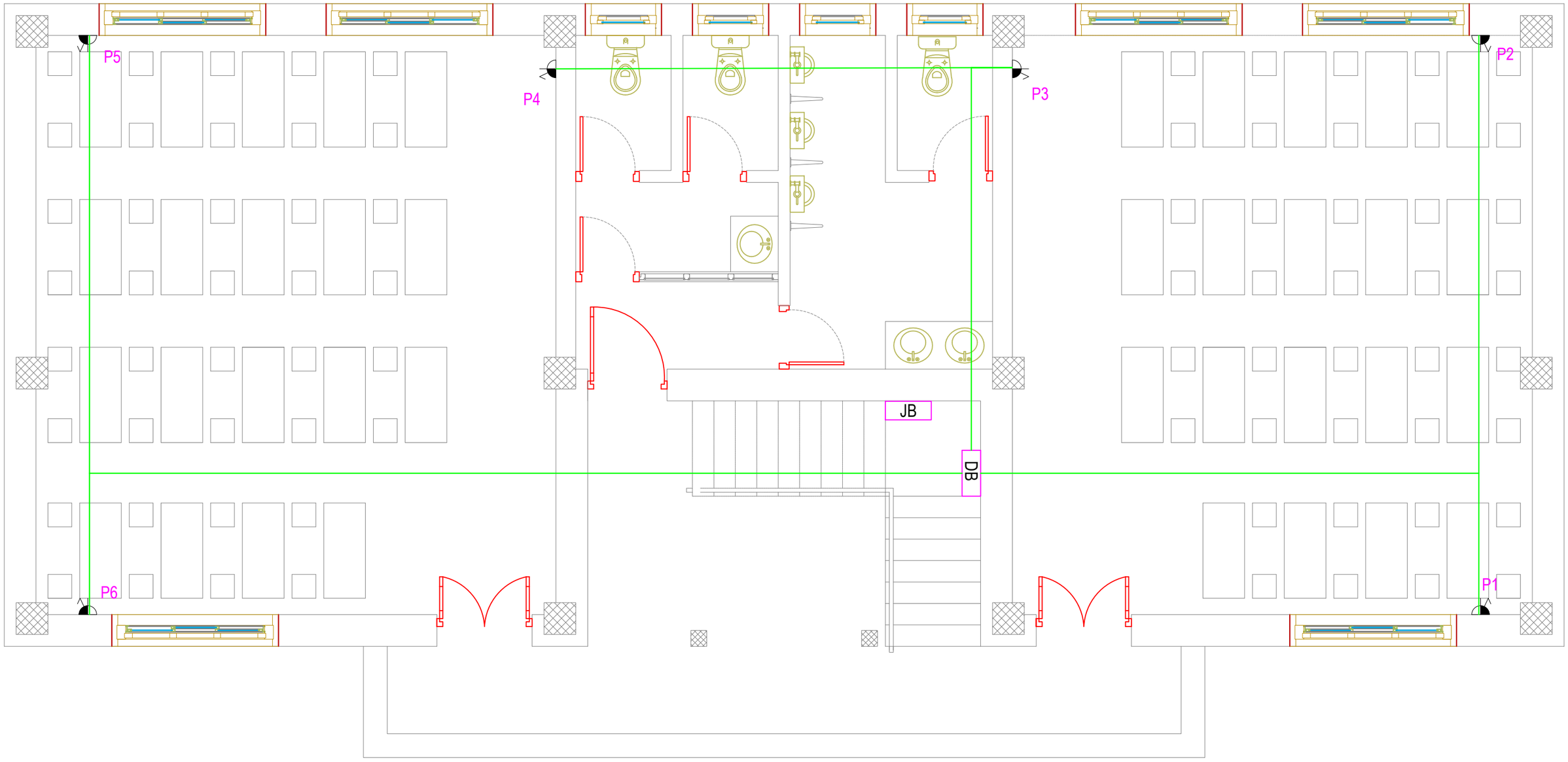

Khorlochhu

ELECTRICAL DRAWING

PROJECT TITLE	DRAWING TITLE
Construction of Doksum Primary School	POWER_SOCKET_OUTLET_&_CONDUITS_LAYOUT_GROUND_FLOOR

NOTES

1. ALL DIMENSIONS ARE IN MILLIMETER & ELEVATION IN METER UNLESS SPECIFIED OTHERWISE.
2. ALL DIMENSIONS MEASURE UNFINISHED SURFACES UNLESS SPECIFIED OTHERWISE.
3. DIMENSIONS ARE TO BE READ AND NOT SCALED OFF.
4. ANY DISCREPANCIES IN THE DRAWING ARE TO BE BROUGHT TO THE IMMEDIATE NOTICE OF THE SUPERVISION TEAM.

CHECKED	APPROVED	DATE	DRAWING NO.
			EL_5
		MARCH, 2026	SCALE
			NTS

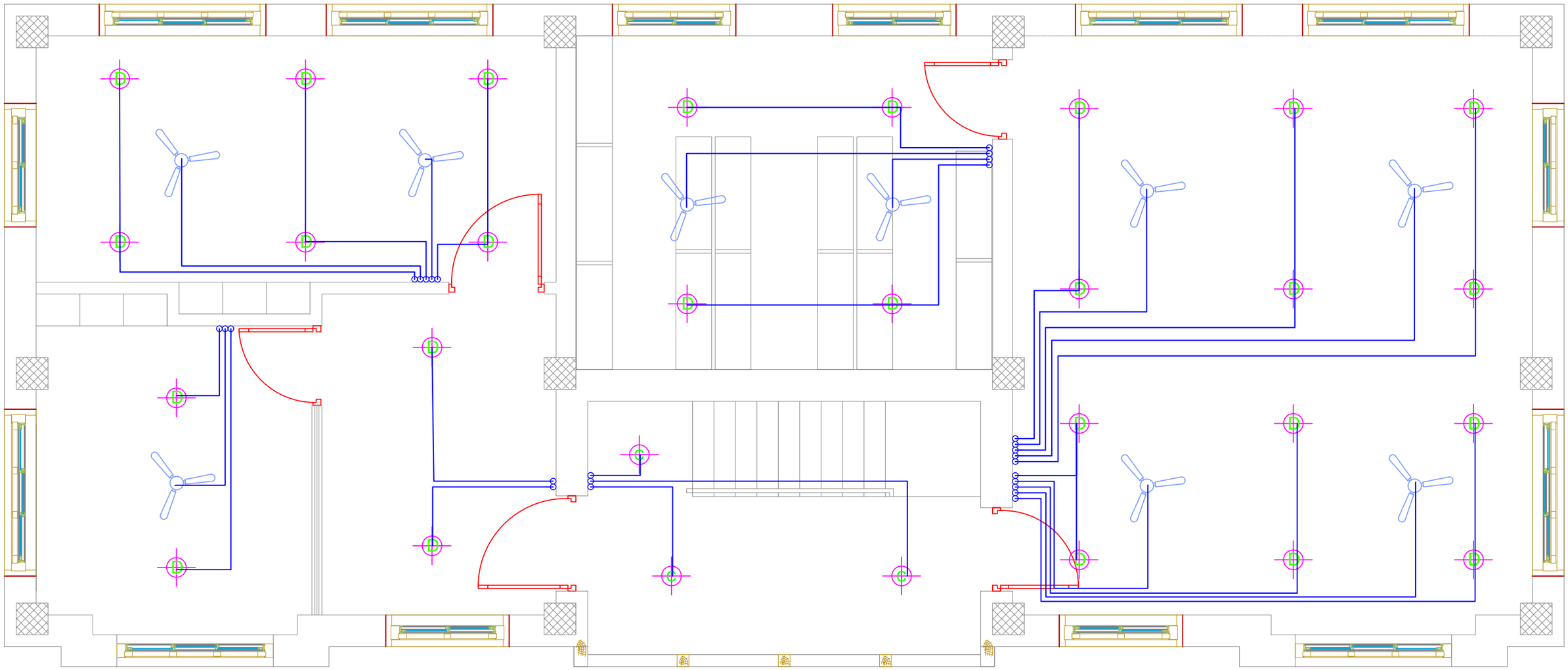

Khorlochhu

ELECTRICAL DRAWING

PROJECT TITLE	DRAWING TITLE
Construction of Doksum Primary School	FITTINGS_LAYOUT_FIRST_FLOOR

NOTES

1. ALL DIMENSIONS ARE IN MILLIMETER & ELEVATION IN METER UNLESS SPECIFIED OTHERWISE.
2. ALL DIMENSIONS MEASURE UNFINISHED SURFACES UNLESS SPECIFIED OTHERWISE.
3. DIMENSIONS ARE TO BE READ AND NOT SCALED OFF.
4. ANY DISCREPANCIES IN THE DRAWING ARE TO BE BROUGHT TO THE IMMEDIATE NOTICE OF THE SUPERVISION TEAM.

CHECKED	APPROVED	DATE	DRAWING NO.
			EL_6
		MARCH, 2026	SCALE
			NTS

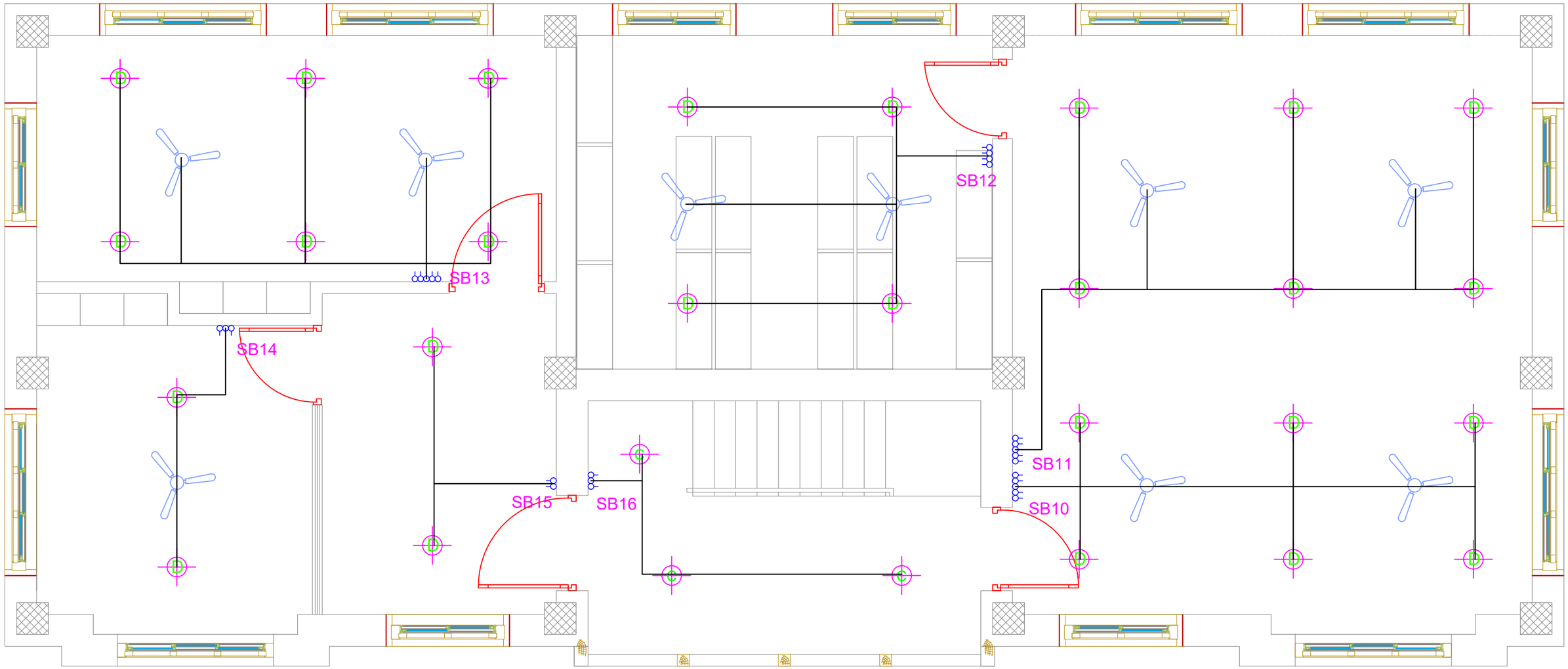

ELECTRICAL DRAWING

PROJECT TITLE	DRAWING TITLE
Construction of Doksum Primary School	FITTINGS_&_CONDUCT_LAYOUT_FIRST_FLOOR

NOTES

1. ALL DIMENSIONS ARE IN MILLIMETER & ELEVATION IN METER UNLESS SPECIFIED OTHERWISE.
2. ALL DIMENSIONS MEASURE UNFINISHED SURFACES UNLESS SPECIFIED OTHERWISE.
3. DIMENSIONS ARE TO BE READ AND NOT SCALED OFF.
4. ANY DISCREPANCIES IN THE DRAWING ARE TO BE BROUGHT TO THE IMMEDIATE NOTICE OF THE SUPERVISION TEAM.

CHECKED	APPROVED	DATE	DRAWING NO.
			EL_7
		MARCH, 2026	SCALE
			NTS

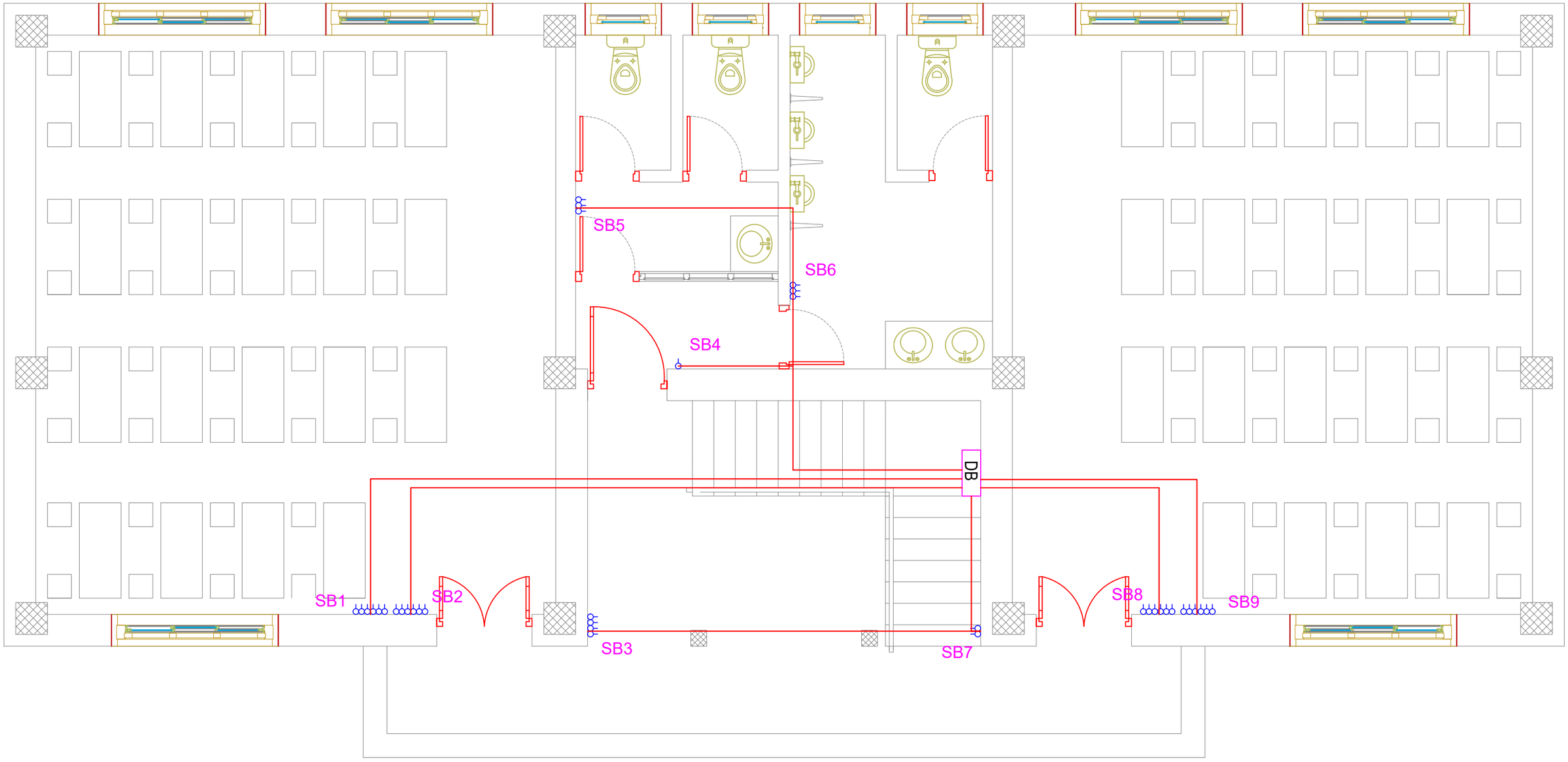

Khorlochhu

ELECTRICAL DRAWING

PROJECT TITLE	DRAWING TITLE
Construction of Doksum Primary School	LIGHT_CIRCUITS_LAYOUT_FIRST_FLOOR

NOTES

1. ALL DIMENSIONS ARE IN MILLIMETER & ELEVATION IN METER UNLESS SPECIFIED OTHERWISE.
2. ALL DIMENSIONS MEASURE UNFINISHED SURFACES UNLESS SPECIFIED OTHERWISE.
3. DIMENSIONS ARE TO BE READ AND NOT SCALED OFF.
4. ANY DISCREPANCIES IN THE DRAWING ARE TO BE BROUGHT TO THE IMMEDIATE NOTICE OF THE SUPERVISION TEAM.

CHECKED	APPROVED	DATE	DRAWING NO.
			EL_8
		MARCH, 2026	SCALE
			NTS

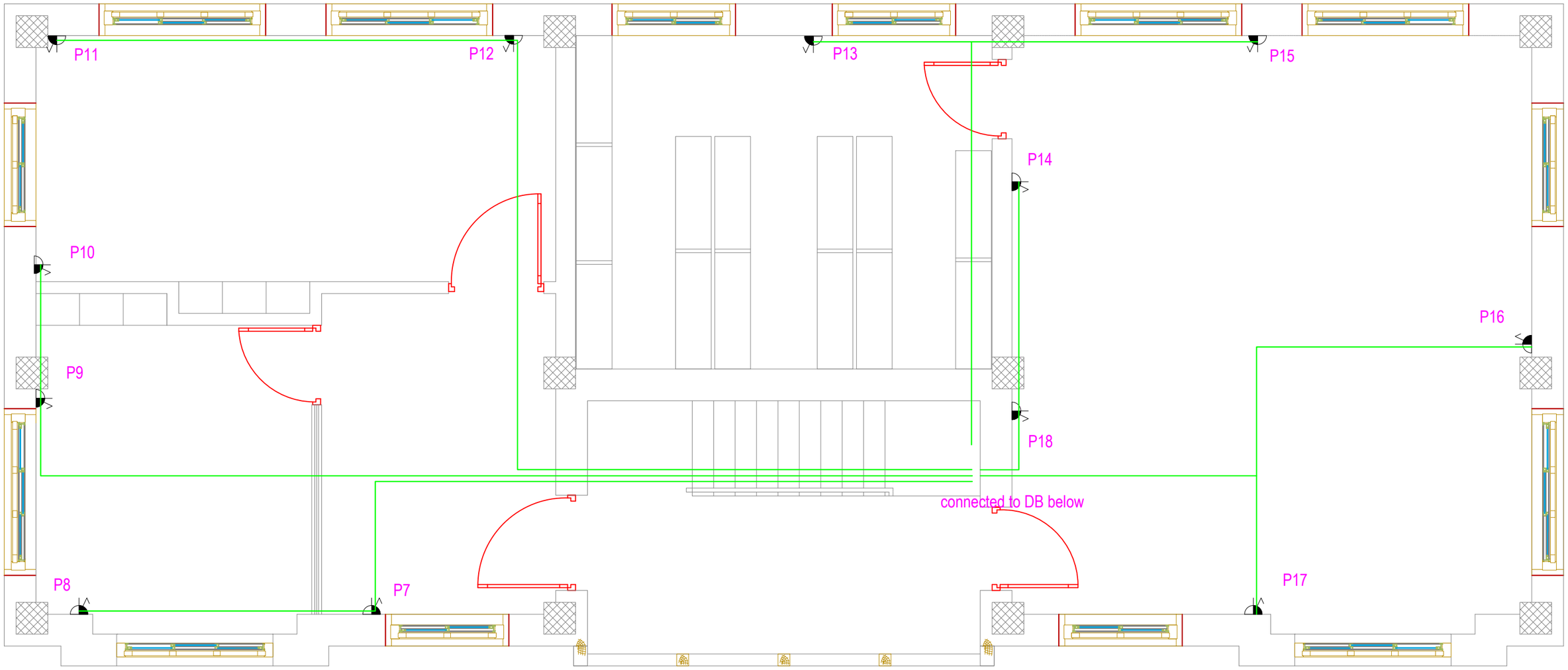

Khorlochhu

ELECTRICAL DRAWING

PROJECT TITLE	DRAWING TITLE
Construction of Doksum Primary School	POWER_SOCKET_OUTLET_&_CONDUITS_LAYOUT_FIRST_FLOOR

NOTES

1. ALL DIMENSIONS ARE IN MILLIMETER & ELEVATION IN METER UNLESS SPECIFIED OTHERWISE.
2. ALL DIMENSIONS MEASURE UNFINISHED SURFACES UNLESS SPECIFIED OTHERWISE.
3. DIMENSIONS ARE TO BE READ AND NOT SCALED OFF.
4. ANY DISCREPANCIES IN THE DRAWING ARE TO BE BROUGHT TO THE IMMEDIATE NOTICE OF THE SUPERVISION TEAM.

CHECKED	APPROVED	DATE	DRAWING NO.
			EL_9
		MARCH, 2026	SCALE
			NTS

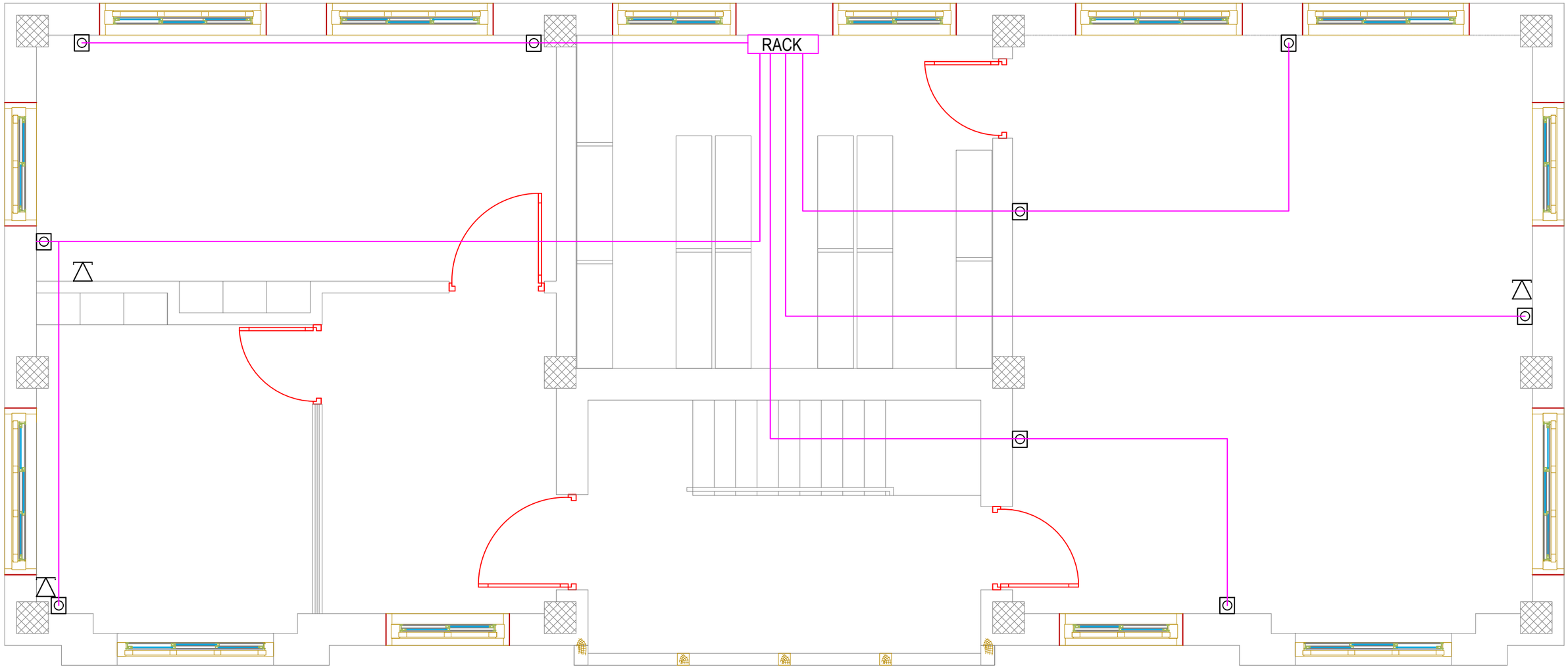

Khorlochhu

ELECTRICAL DRAWING

PROJECT TITLE	DRAWING TITLE
Construction of Doksum Primary School	LAN,TELEPHONE_OUTLET_&_CONDUITS_LAYOUT_FIRST_FLOOR

NOTES

1. ALL DIMENSIONS ARE IN MILLIMETER & ELEVATION IN METER UNLESS SPECIFIED OTHERWISE.
2. ALL DIMENSIONS MEASURE UNFINISHED SURFACES UNLESS SPECIFIED OTHERWISE.
3. DIMENSIONS ARE TO BE READ AND NOT SCALED OFF.
4. ANY DISCREPANCIES IN THE DRAWING ARE TO BE BROUGHT TO THE IMMEDIATE NOTICE OF THE SUPERVISION TEAM.

CHECKED	APPROVED	DATE	DRAWING NO.
			EL_10
		MARCH, 2026	SCALE
			NTS

DISTRIBUTION BOARD

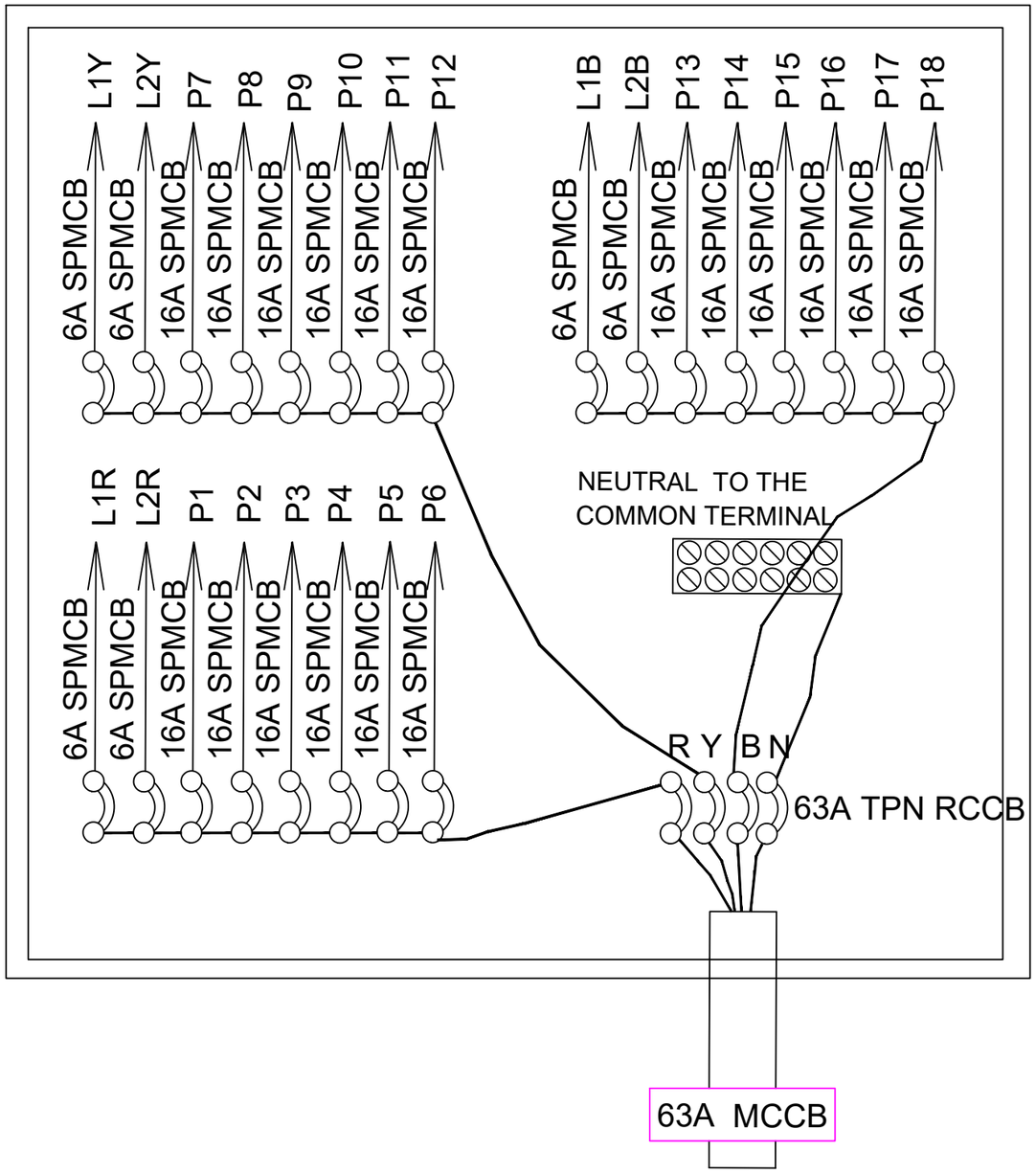

4 CORE,10 sq mm armoured UG cable
or as recommended by BPC

8 WAY TPN DB,DOUBLE DOOR TYPE,& 63A TPN RCCB WITH FOLLOWING OUTGOING:
6A SPMCB - 3 NOs.
16A SPMCB - 18 NOs.

BALANCE LOAD IN WATTS

R-PHASE	Y-PHASE	B-PHASE
L1- 468	L1- 595	L1- 702
L2- SPARE	L2- SPARE	L2- SPARE
P1- 2000	P7- 2000	P13-2000
P2- 2000	P8- 2000	P14-2000
P3- 2000	P9- 2000	P15-2000
P4- 2000	P10- 2000	P16-2000
P5- 2000	P11- 2000	P17-2000
P6- 2000	P12- 2000	P18-2000
12,468	12,595	12,702

L1R=SB1,SB2,SB3,SB4,SB5,SB6,SB7
L1Y=SB8,SB9,SB10
L1B=SB11,SB12,SB13,SB14,SB15,SB16

Connected load= 37,765 W
Demand load(L.F- 70%)= 26,436 W

Khorlochhu	ELECTRICAL DRAWING	NOTES	CHECKED	APPROVED	DATE	DRAWING NO.
	PROJECT TITLE: Construction of Doksum Primary School	1. ALL DIMENSIONS ARE IN MILLIMETER & ELEVATION IN METER UNLESS SPECIFIED OTHERWISE. 2. ALL DIMENSIONS MEASURE UNFINISHED SURFACES UNLESS SPECIFIED OTHERWISE. 3. DIMENSIONS ARE TO BE READ AND NOT SCALED OFF. 4. ANY DISCREPANCIES IN THE DRAWING ARE TO BE BROUGHT TO THE IMMEDIATE NOTICE OF THE SUPERVISION TEAM.				EL_11
	DRAWING TITLE: MDB_DETAILS				MARCH, 2026	SCALE: NTS

ARCHITECTURAL DRAWINGS

LABORATORY/LIBRARY BLOCK

Owner - Khorlochhu Hydro Power Limited
Location - Doksum New Township, Trashiyangtse

Khorlochhu

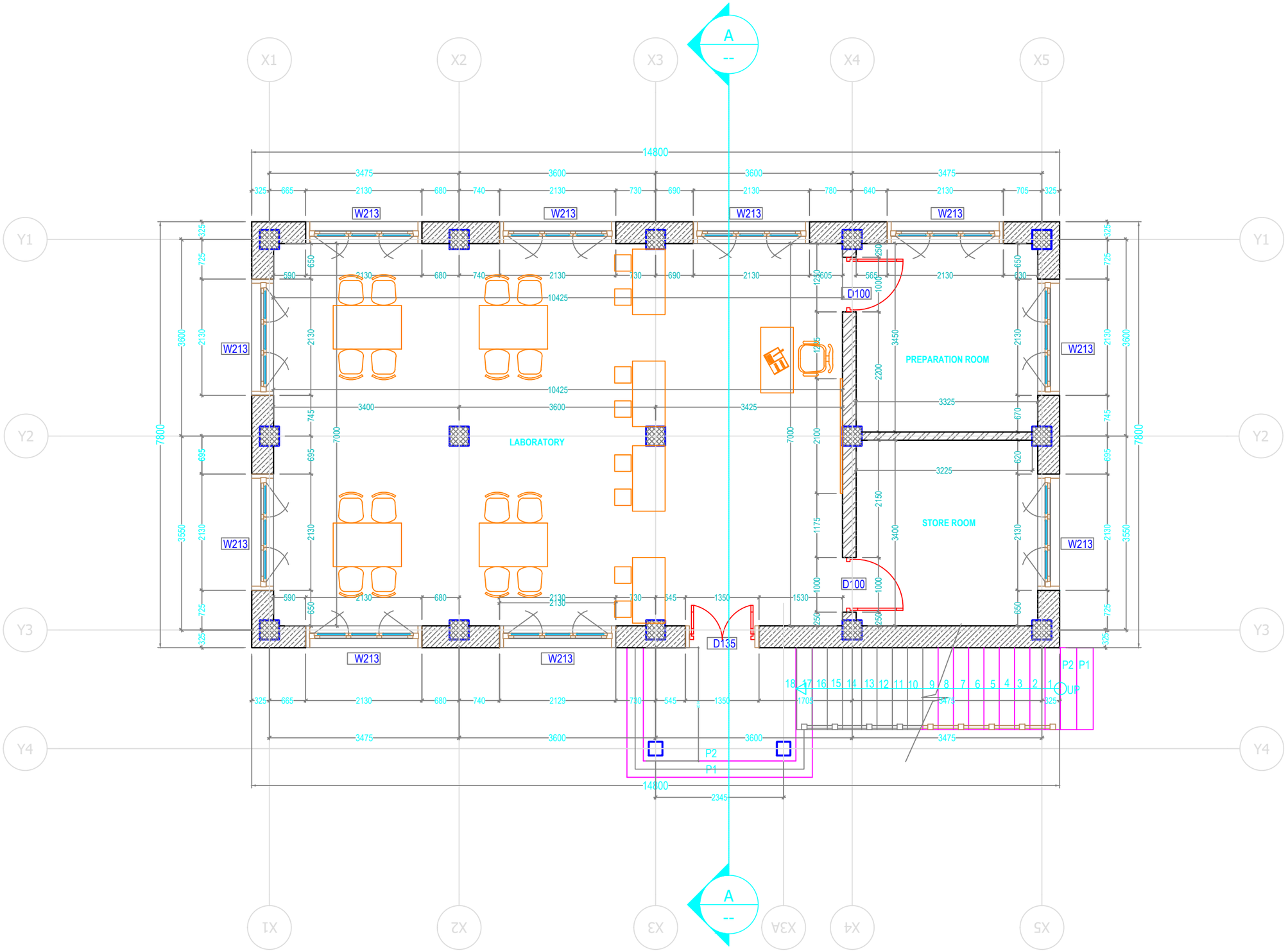

ARCHITECTURAL DRAWING

PROJECT TITLE	DRAWING TITLE
Construction of Doksum Primary School	GROUND_FLOOR_PLAN

NOTES

1. ALL DIMENSIONS ARE IN MILLIMETER & ELEVATION IN METER UNLESS SPECIFIED OTHERWISE.
2. ALL DIMENSIONS MEASURE UNFINISHED SURFACES UNLESS SPECIFIED OTHERWISE.
3. DIMENSIONS ARE TO BE READ AND NOT SCALED OFF.
4. ANY DISCREPANCIES IN THE DRAWING ARE TO BE BROUGHT TO THE IMMEDIATE NOTICE OF THE SUPERVISION TEAM.

CHECKED	APPROVED	DATE	DRAWING NO.
			AR_01
		MARCH, 2026	SCALE
			NTS

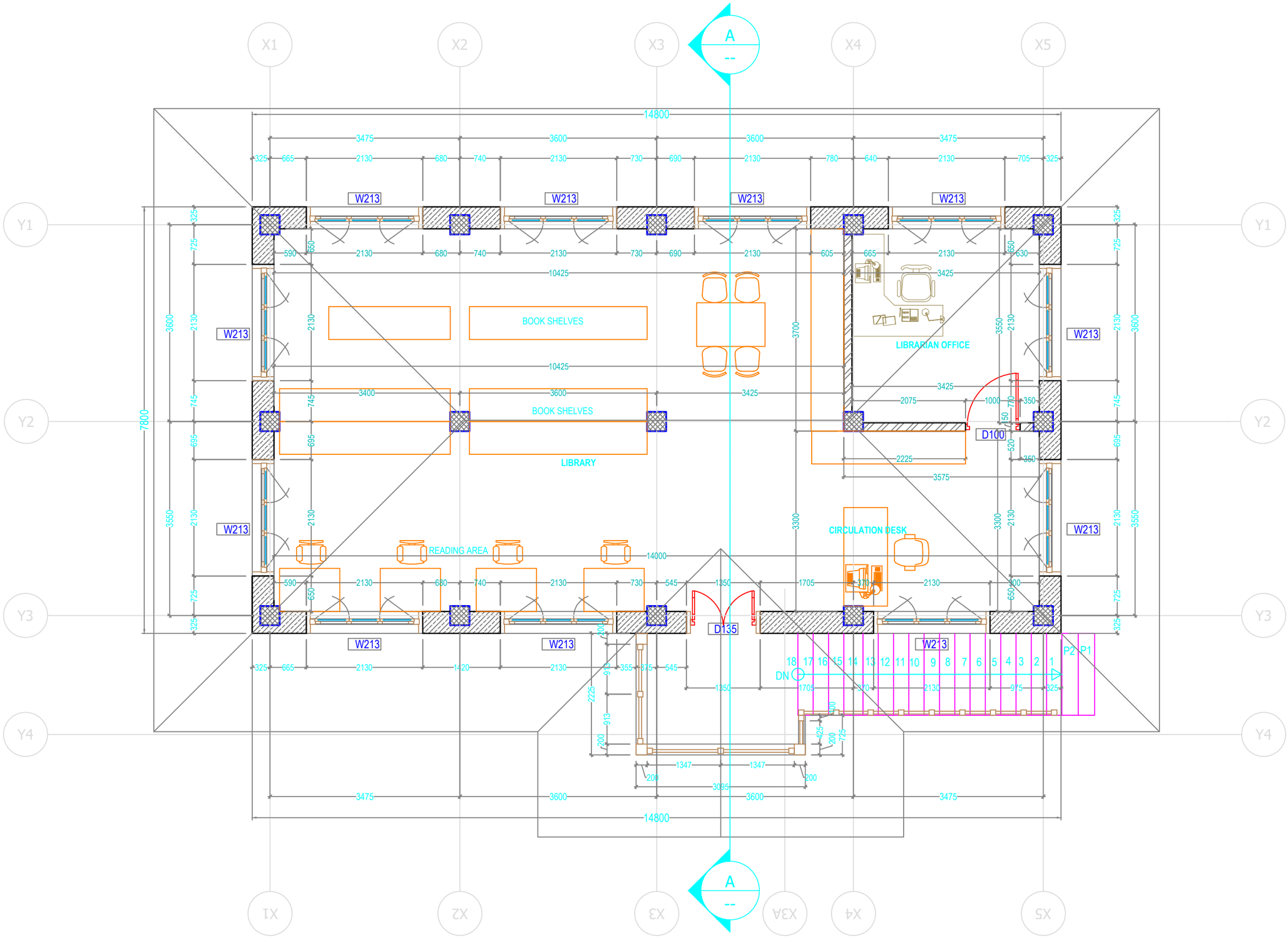

Khorlochhu

ARCHITECTURAL DRAWING

PROJECT TITLE	DRAWING TITLE
Construction of Doksum Primary School	FIRST_FLOOR_PLAN

NOTES

1. ALL DIMENSIONS ARE IN MILLIMETER & ELEVATION IN METER UNLESS SPECIFIED OTHERWISE.
2. ALL DIMENSIONS MEASURE UNFINISHED SURFACES UNLESS SPECIFIED OTHERWISE.
3. DIMENSIONS ARE TO BE READ AND NOT SCALED OFF.
4. ANY DISCREPANCIES IN THE DRAWING ARE TO BE BROUGHT TO THE IMMEDIATE NOTICE OF THE SUPERVISION TEAM.

CHECKED	APPROVED	DATE	DRAWING NO.
			AR_02
		MARCH, 2026	SCALE
			NTS

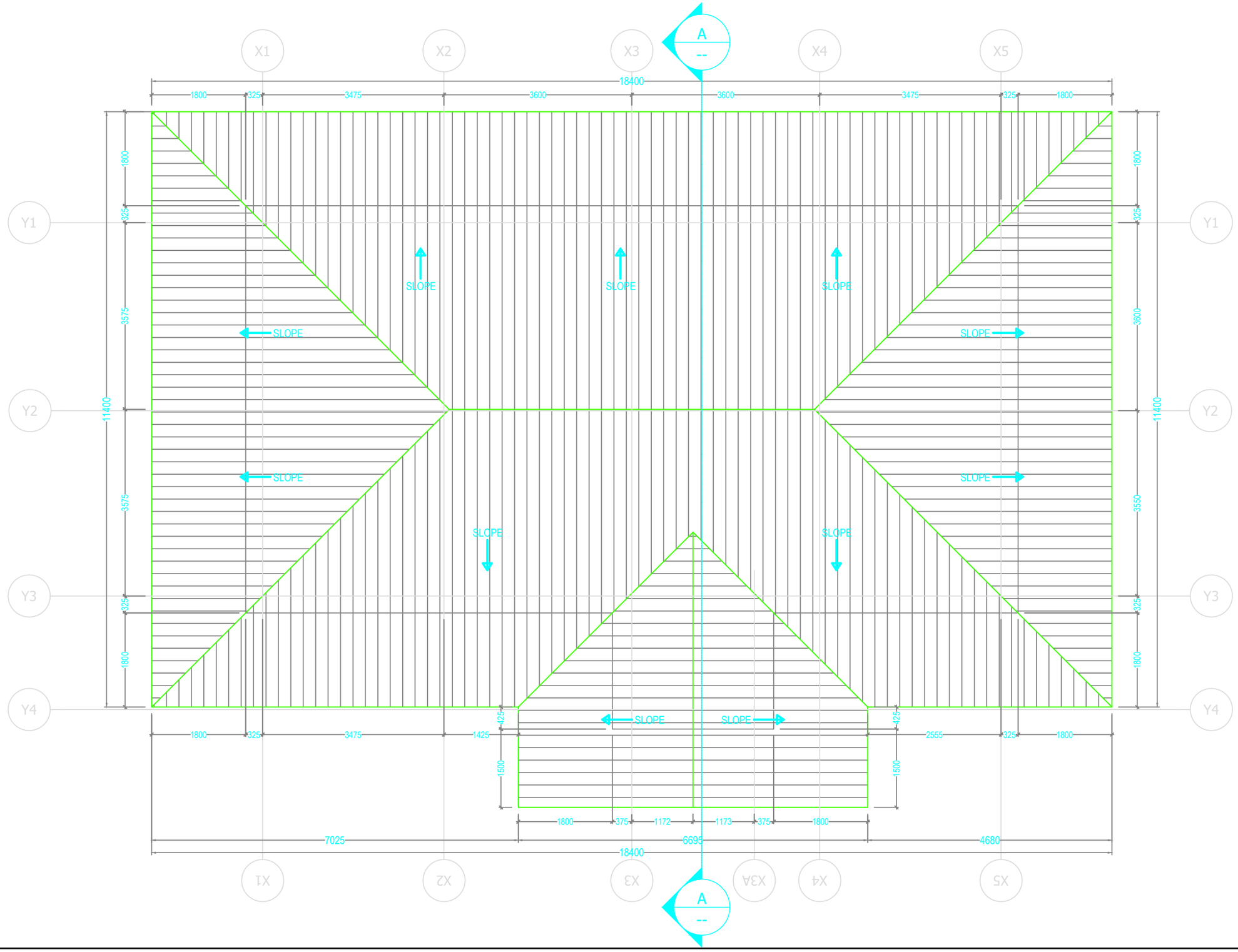

ARCHITECTURAL DRAWING

PROJECT TITLE	DRAWING TITLE
Construction of Doksum Primary School	ROOF_PLAN

NOTES

1. ALL DIMENSIONS ARE IN MILLIMETER & ELEVATION IN METER UNLESS SPECIFIED OTHERWISE.
2. ALL DIMENSIONS MEASURE UNFINISHED SURFACES UNLESS SPECIFIED OTHERWISE.
3. DIMENSIONS ARE TO BE READ AND NOT SCALED OFF.
4. ANY DISCREPANCIES IN THE DRAWING ARE TO BE BROUGHT TO THE IMMEDIATE NOTICE OF THE SUPERVISION TEAM.

CHECKED	APPROVED	DATE	DRAWING NO.
			AR_03
		MARCH, 2026	SCALE
			NTS

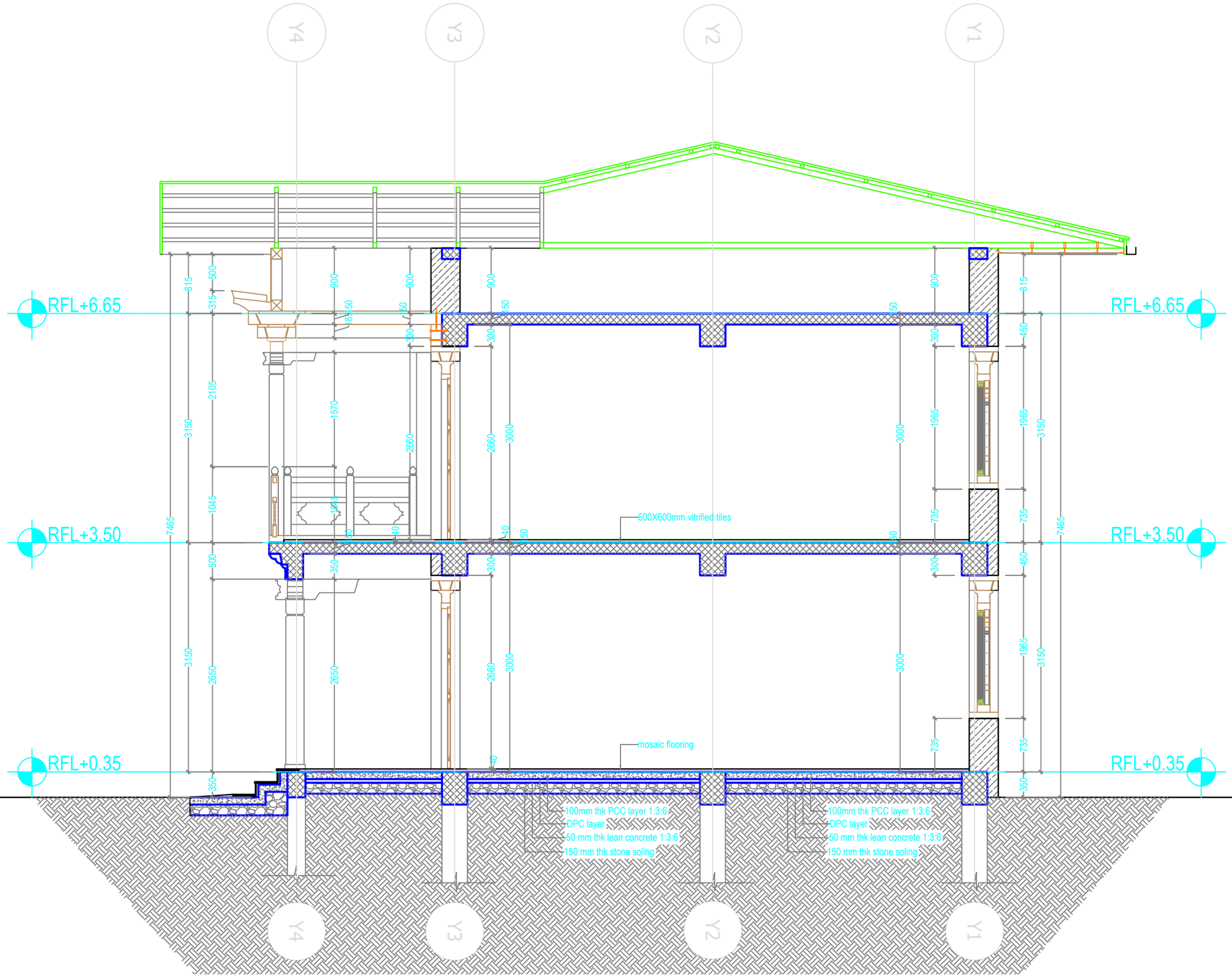

Khorlochhu

ARCHITECTURAL DRAWING

PROJECT TITLE	DRAWING TITLE
Construction of Doksum Primary School	SECTION_A-A

NOTES

1. ALL DIMENSIONS ARE IN MILLIMETER & ELEVATION IN METER UNLESS SPECIFIED OTHERWISE.
2. ALL DIMENSIONS MEASURE UNFINISHED SURFACES UNLESS SPECIFIED OTHERWISE.
3. DIMENSIONS ARE TO BE READ AND NOT SCALED OFF.
4. ANY DISCREPANCIES IN THE DRAWING ARE TO BE BROUGHT TO THE IMMEDIATE NOTICE OF THE SUPERVISION TEAM.

CHECKED	APPROVED	DATE	DRAWING NO.
			AR_04
		MARCH, 2026	SCALE
			NTS

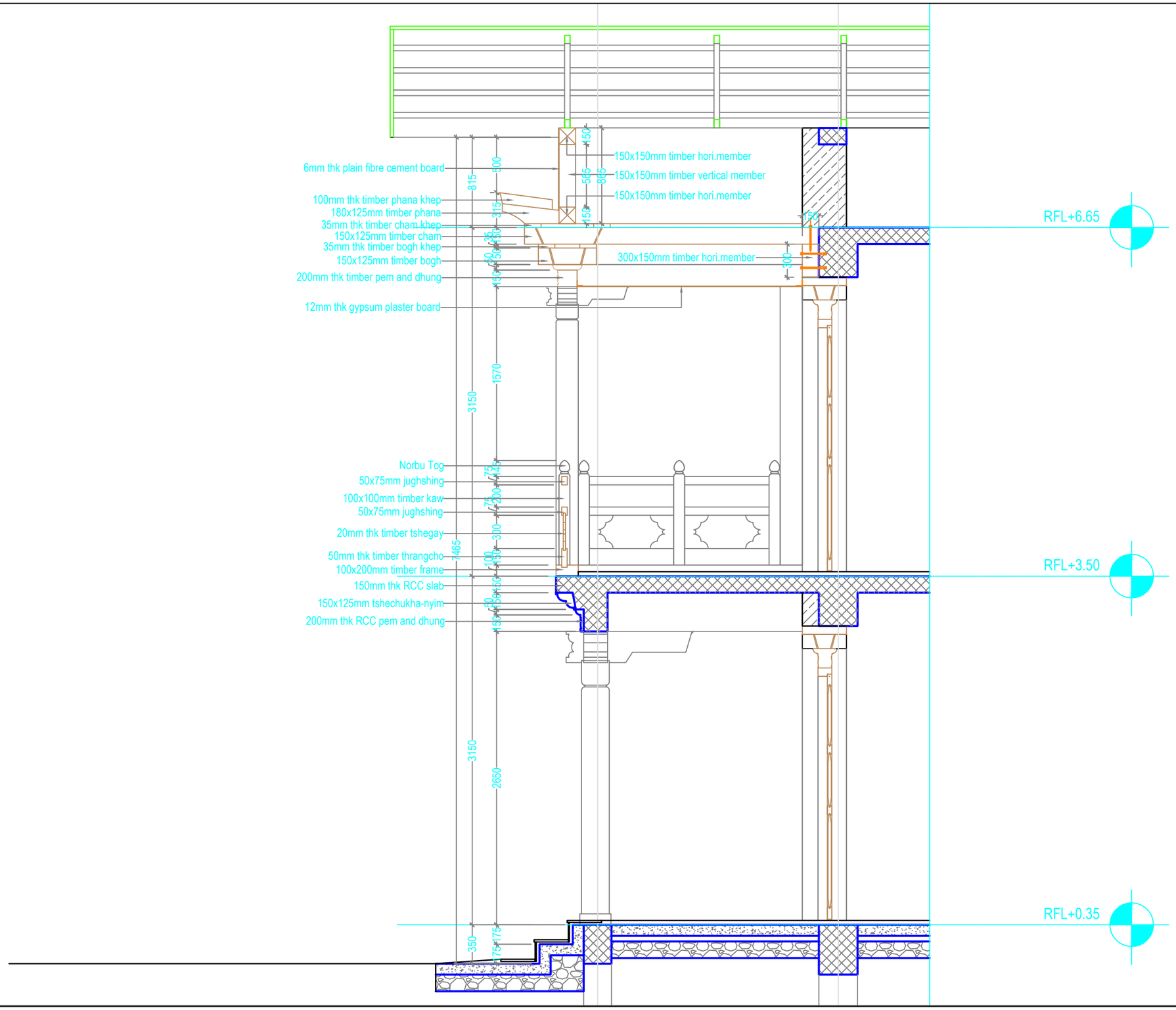

Khorlochhu

ARCHITECTURAL DRAWING

PROJECT TITLE	DRAWING TITLE
Construction of Doksum Primary School	DETAIL_A

NOTES

1. ALL DIMENSIONS ARE IN MILLIMETER & ELEVATION IN METER UNLESS SPECIFIED OTHERWISE.
2. ALL DIMENSIONS MEASURE UNFINISHED SURFACES UNLESS SPECIFIED OTHERWISE.
3. DIMENSIONS ARE TO BE READ AND NOT SCALED OFF.
4. ANY DISCREPANCIES IN THE DRAWING ARE TO BE BROUGHT TO THE IMMEDIATE NOTICE OF THE SUPERVISION TEAM.

CHECKED	APPROVED	DATE	DRAWING NO.
			AR_05
		MARCH, 2026	SCALE
			NTS

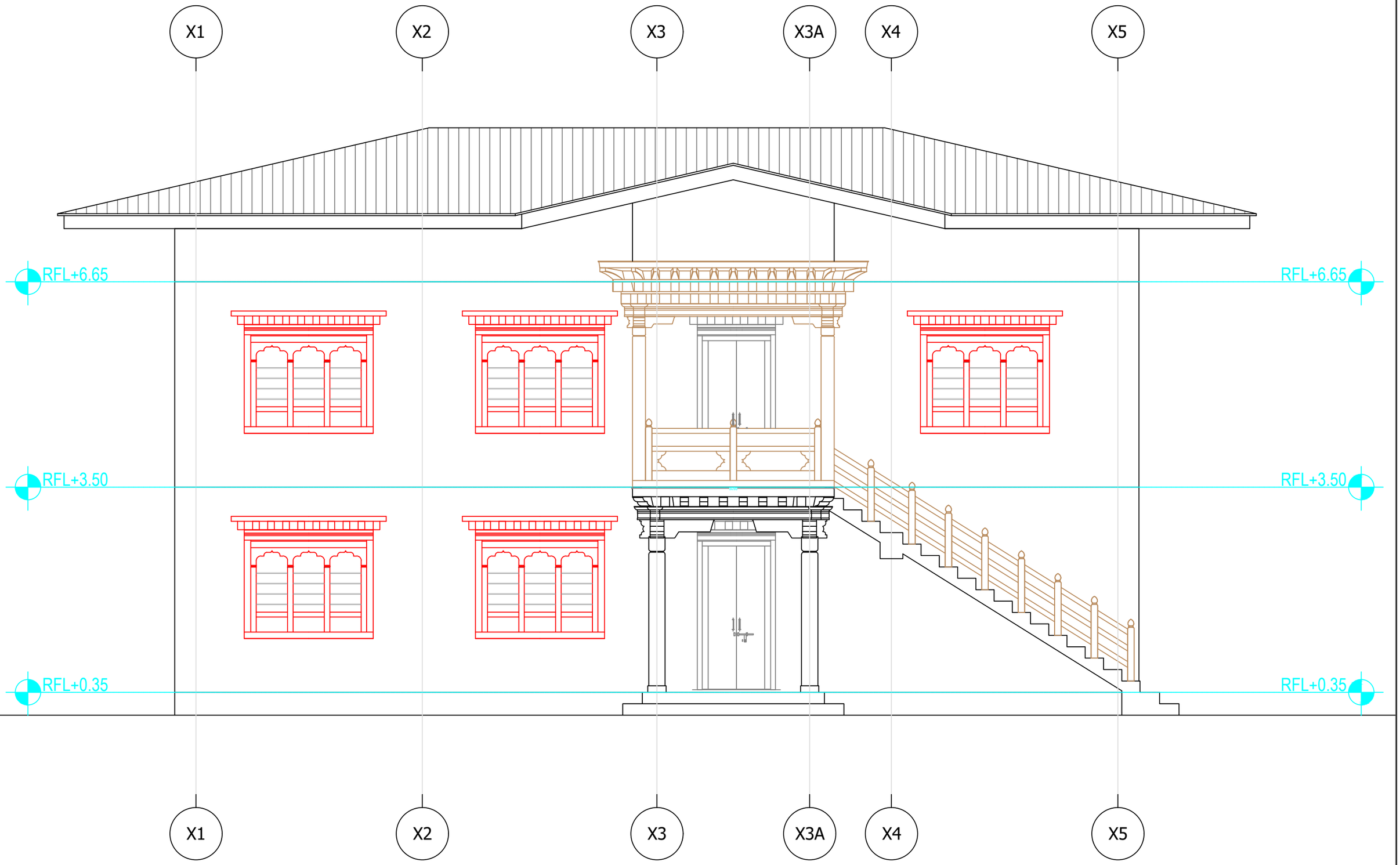

Khorlochhu

ARCHITECTURAL DRAWING

PROJECT TITLE	DRAWING TITLE
Construction of Doksum Primary School	ELEVATION_A

NOTES

1. ALL DIMENSIONS ARE IN MILLIMETER & ELEVATION IN METER UNLESS SPECIFIED OTHERWISE.
2. ALL DIMENSIONS MEASURE UNFINISHED SURFACES UNLESS SPECIFIED OTHERWISE.
3. DIMENSIONS ARE TO BE READ AND NOT SCALED OFF.
4. ANY DISCREPANCIES IN THE DRAWING ARE TO BE BROUGHT TO THE IMMEDIATE NOTICE OF THE SUPERVISION TEAM.

CHECKED	APPROVED	DATE	DRAWING NO.
			AR_06
		MARCH, 2026	SCALE
			NTS

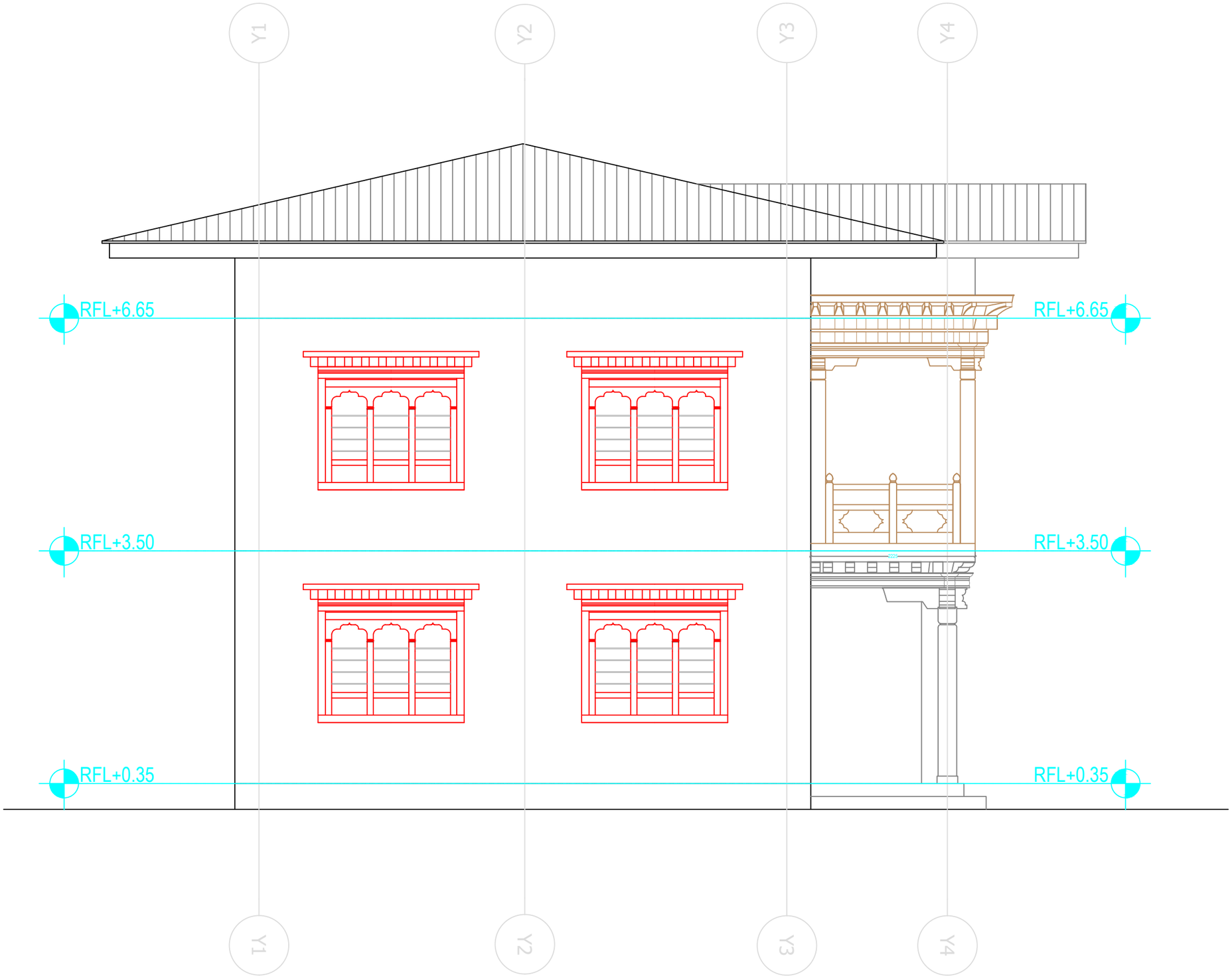

Khorlochhu

ARCHITECTURAL DRAWING

PROJECT TITLE	DRAWING TITLE
Construction of Doksum Primary School	ELEVATION_B

NOTES

1. ALL DIMENSIONS ARE IN MILLIMETER & ELEVATION IN METER UNLESS SPECIFIED OTHERWISE.
2. ALL DIMENSIONS MEASURE UNFINISHED SURFACES UNLESS SPECIFIED OTHERWISE.
3. DIMENSIONS ARE TO BE READ AND NOT SCALED OFF.
4. ANY DISCREPANCIES IN THE DRAWING ARE TO BE BROUGHT TO THE IMMEDIATE NOTICE OF THE SUPERVISION TEAM.

CHECKED	APPROVED	DATE	DRAWING NO.
		MARCH, 2026	AR_07
			SCALE
			NTS

Khorlochhu

ARCHITECTURAL DRAWING

PROJECT TITLE	DRAWING TITLE
Construction of Doksum Primary School	ELEVATION_C

NOTES

1. ALL DIMENSIONS ARE IN MILLIMETER & ELEVATION IN METER UNLESS SPECIFIED OTHERWISE.
2. ALL DIMENSIONS MEASURE UNFINISHED SURFACES UNLESS SPECIFIED OTHERWISE.
3. DIMENSIONS ARE TO BE READ AND NOT SCALED OFF.
4. ANY DISCREPANCIES IN THE DRAWING ARE TO BE BROUGHT TO THE IMMEDIATE NOTICE OF THE SUPERVISION TEAM.

CHECKED	APPROVED	DATE	DRAWING NO.
			AR_08
		MARCH, 2026	SCALE
			NTS

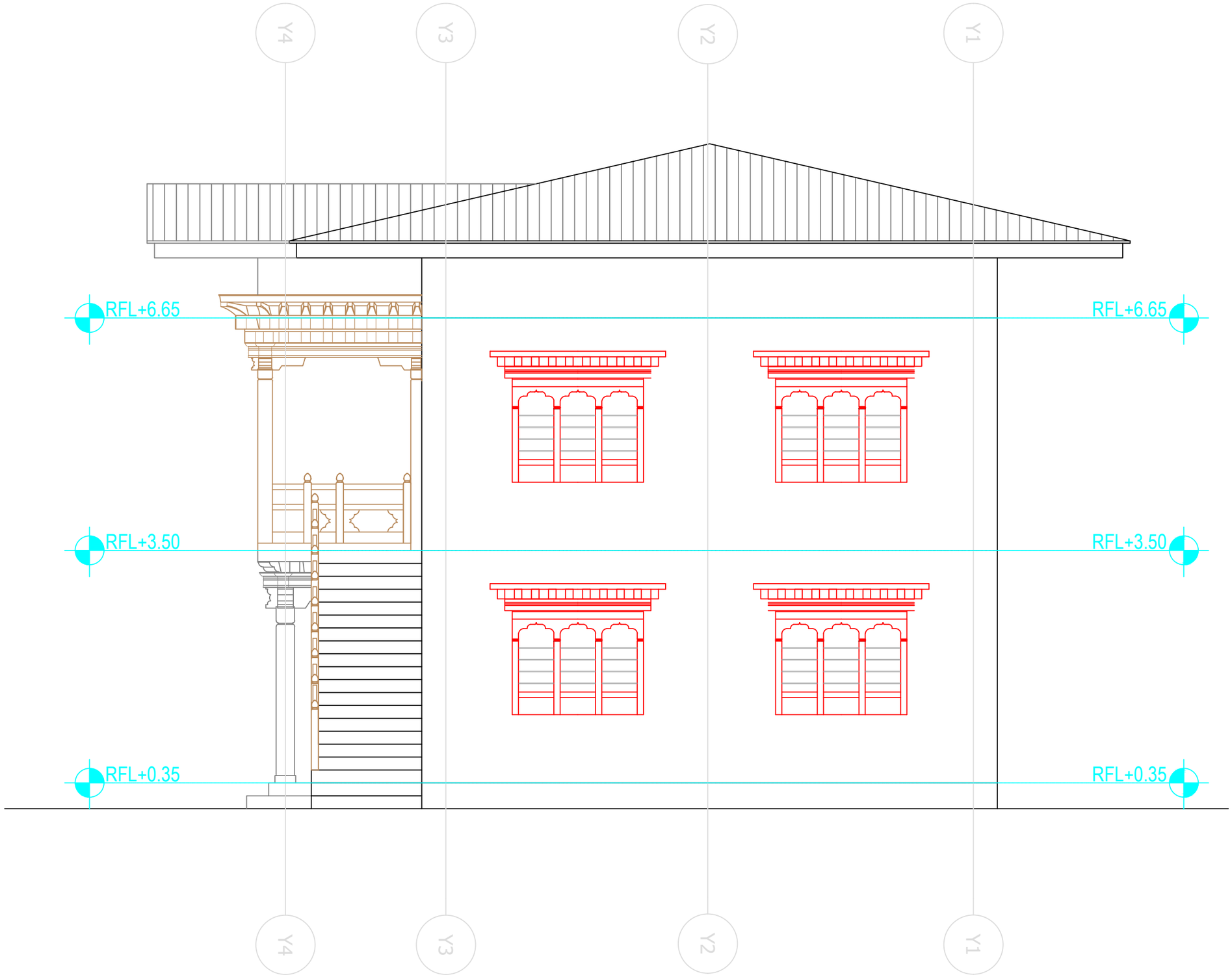

Khorlochhu

ARCHITECTURAL DRAWING

PROJECT TITLE	DRAWING TITLE
Construction of Doksum Primary School	ELEVATION_D

NOTES

1. ALL DIMENSIONS ARE IN MILLIMETER & ELEVATION IN METER UNLESS SPECIFIED OTHERWISE.
2. ALL DIMENSIONS MEASURE UNFINISHED SURFACES UNLESS SPECIFIED OTHERWISE.
3. DIMENSIONS ARE TO BE READ AND NOT SCALED OFF.
4. ANY DISCREPANCIES IN THE DRAWING ARE TO BE BROUGHT TO THE IMMEDIATE NOTICE OF THE SUPERVISION TEAM.

CHECKED	APPROVED	DATE	DRAWING NO.
		MARCH, 2026	AR_09
			SCALE
			NTS

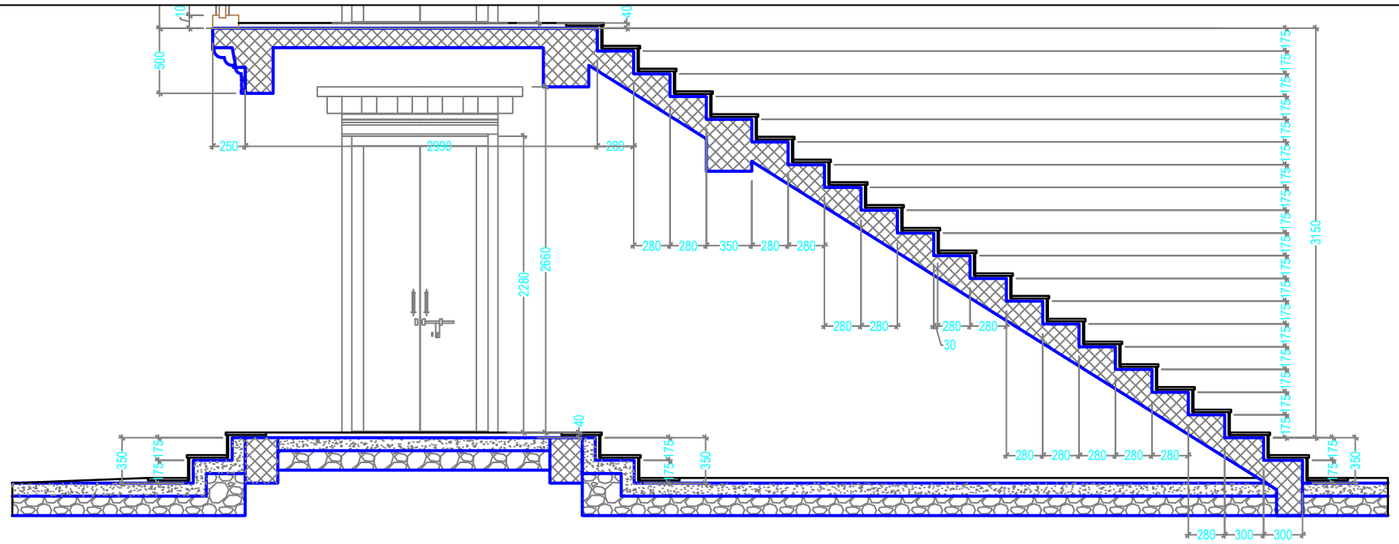

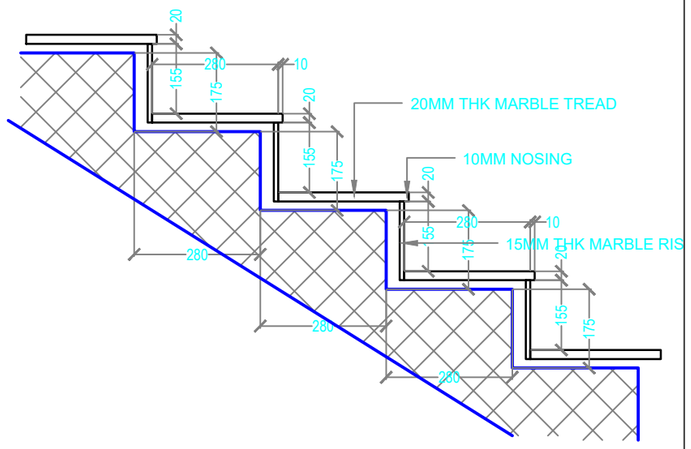

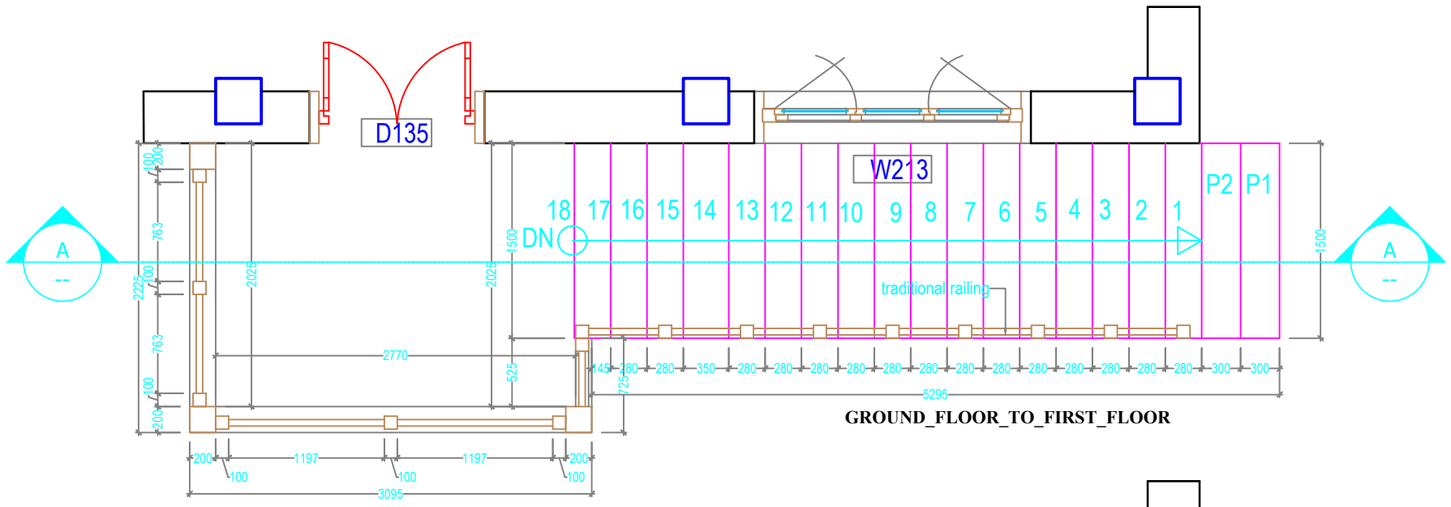

GROUND_FLOOR_TO_FIRST_FLOOR

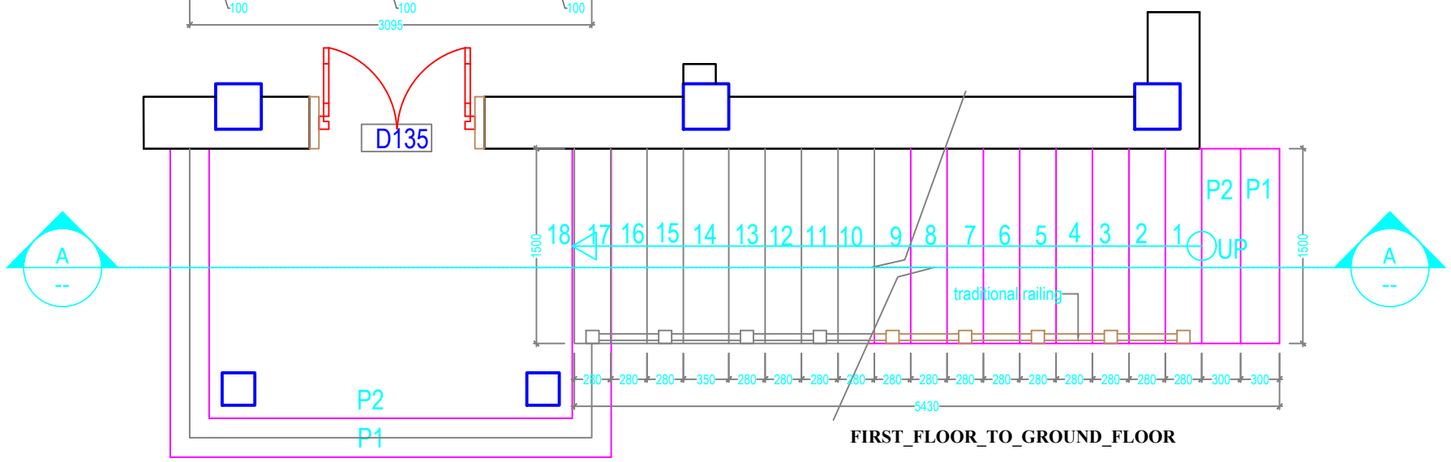

FIRST_FLOOR_TO_GROUND_FLOOR

Khorlochhu

ARCHITECTURAL DRAWING

PROJECT TITLE	DRAWING TITLE
Construction of Doksum Primary School	STAIRCASE_DETAILS

NOTES

1. ALL DIMENSIONS ARE IN MILLIMETER & ELEVATION IN METER UNLESS SPECIFIED OTHERWISE.
2. ALL DIMENSIONS MEASURE UNFINISHED SURFACES UNLESS SPECIFIED OTHERWISE.
3. DIMENSIONS ARE TO BE READ AND NOT SCALED OFF.
4. ANY DISCREPANCIES IN THE DRAWING ARE TO BE BROUGHT TO THE IMMEDIATE NOTICE OF THE SUPERVISION TEAM.

CHECKED	APPROVED	DATE	DRAWING NO.
			AR_10
		MARCH, 2026	SCALE
			NTS

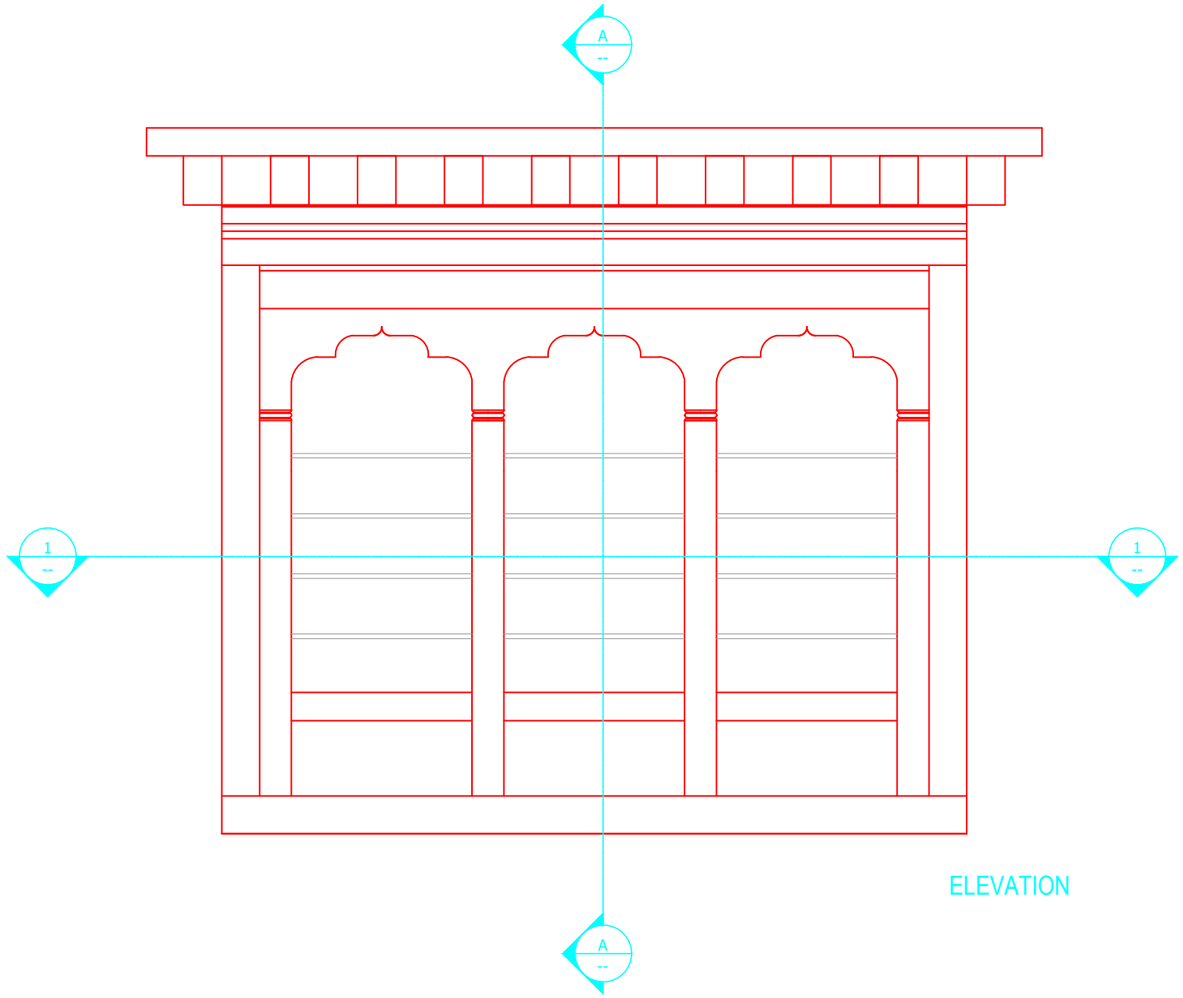

ELEVATION

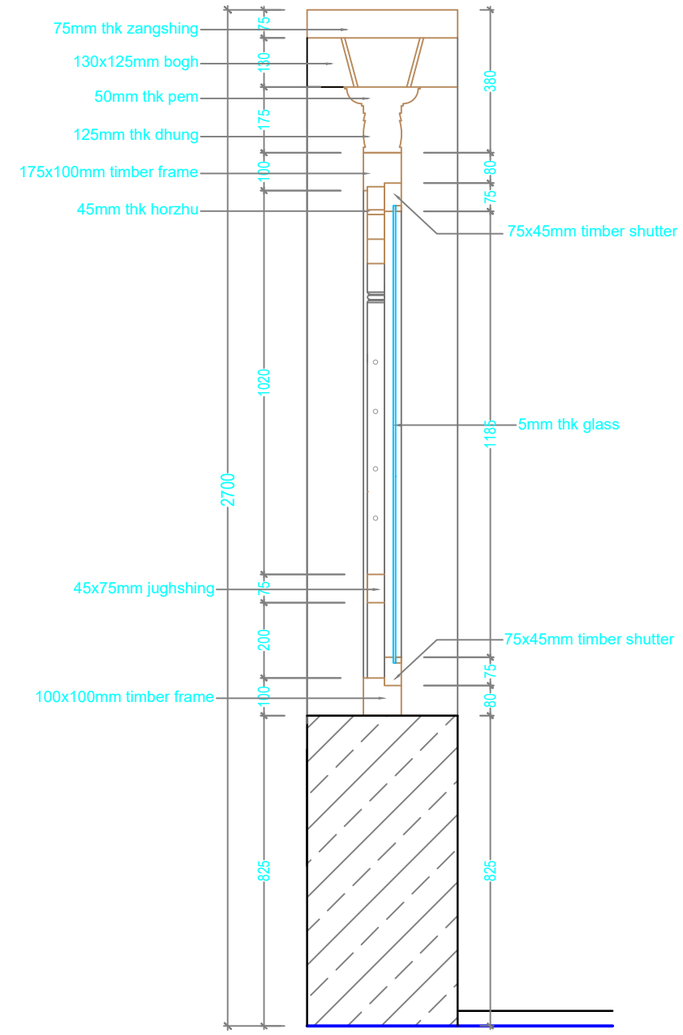

SECTION A-A

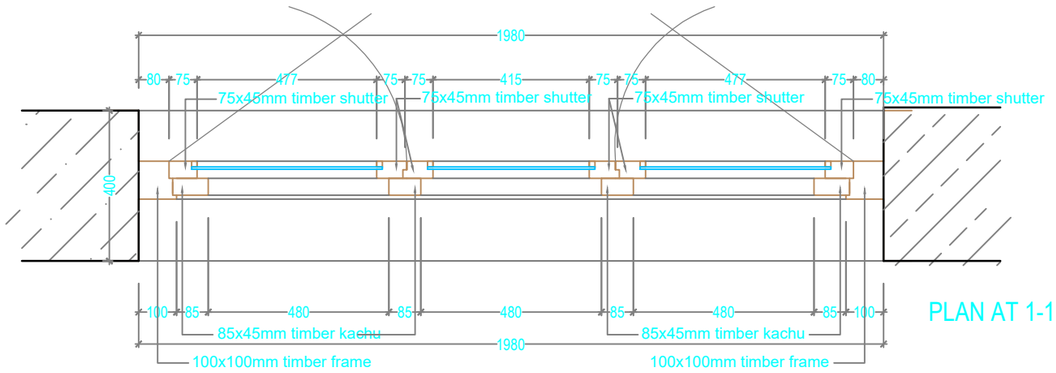

PLAN AT 1-1

Khorlochhu

ARCHITECTURAL DRAWING

PROJECT TITLE	DRAWING TITLE
Construction of Doksum Primary School	WINDOW_DETAILS

NOTES

1. ALL DIMENSIONS ARE IN MILLIMETER & ELEVATION IN METER UNLESS SPECIFIED OTHERWISE.
2. ALL DIMENSIONS MEASURE UNFINISHED SURFACES UNLESS SPECIFIED OTHERWISE.
3. DIMENSIONS ARE TO BE READ AND NOT SCALED OFF.
4. ANY DISCREPANCIES IN THE DRAWING ARE TO BE BROUGHT TO THE IMMEDIATE NOTICE OF THE SUPERVISION TEAM.

CHECKED	APPROVED	DATE	DRAWING NO.
			AR_11
		MARCH, 2026	SCALE
			NTS

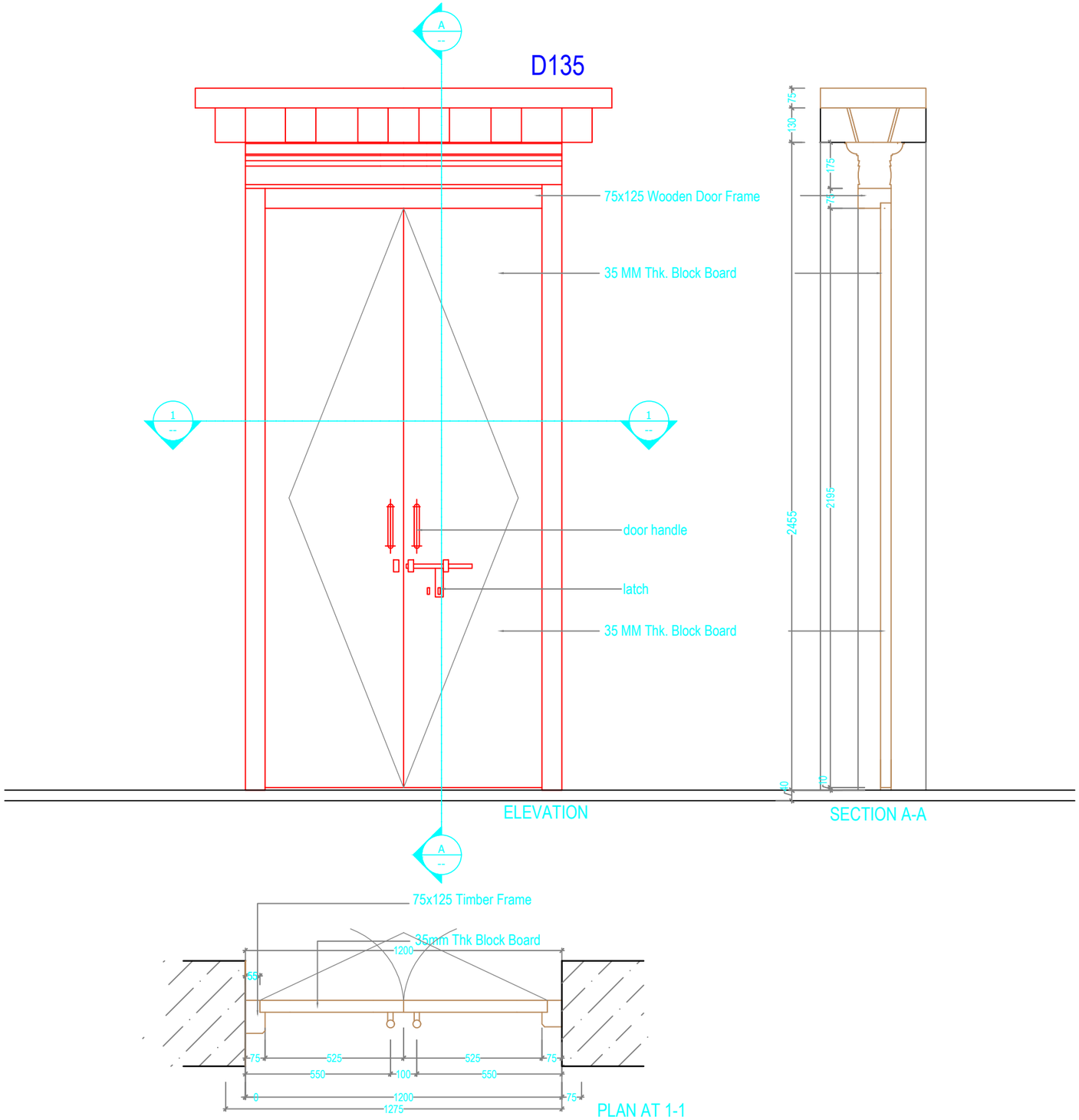

ARCHITECTURAL DRAWING

PROJECT TITLE	DRAWING TITLE
Construction of Doksum Primary School	DOOR_DETAILS

NOTES

1. ALL DIMENSIONS ARE IN MILLIMETER & ELEVATION IN METER UNLESS SPECIFIED OTHERWISE.
2. ALL DIMENSIONS MEASURE UNFINISHED SURFACES UNLESS SPECIFIED OTHERWISE.
3. DIMENSIONS ARE TO BE READ AND NOT SCALED OFF.
4. ANY DISCREPANCIES IN THE DRAWING ARE TO BE BROUGHT TO THE IMMEDIATE NOTICE OF THE SUPERVISION TEAM.

CHECKED	APPROVED	DATE	DRAWING NO.
			AR_12
		MARCH, 2026	SCALE
			NTS

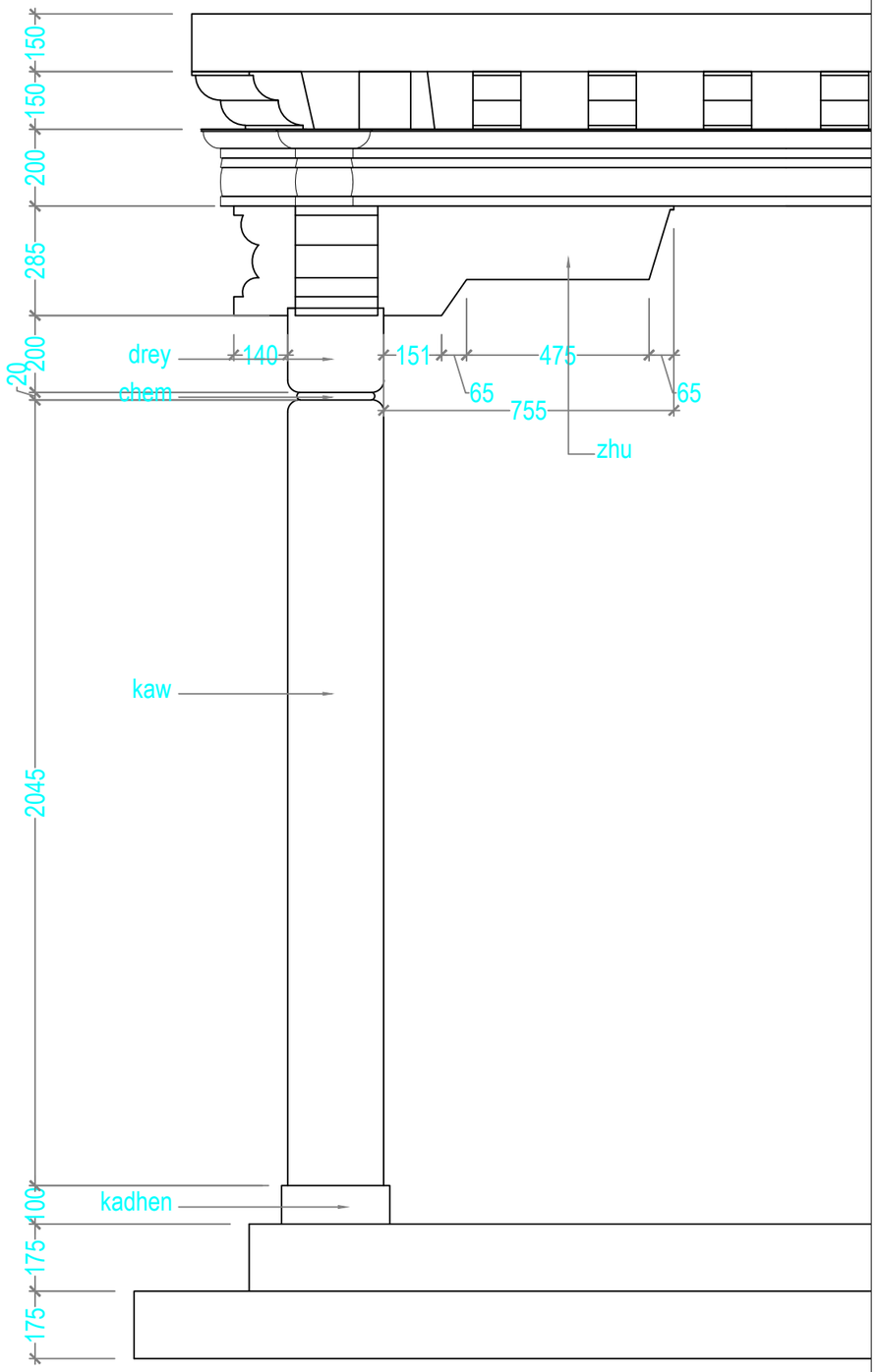

GROUND_FLOOR_KACHEN

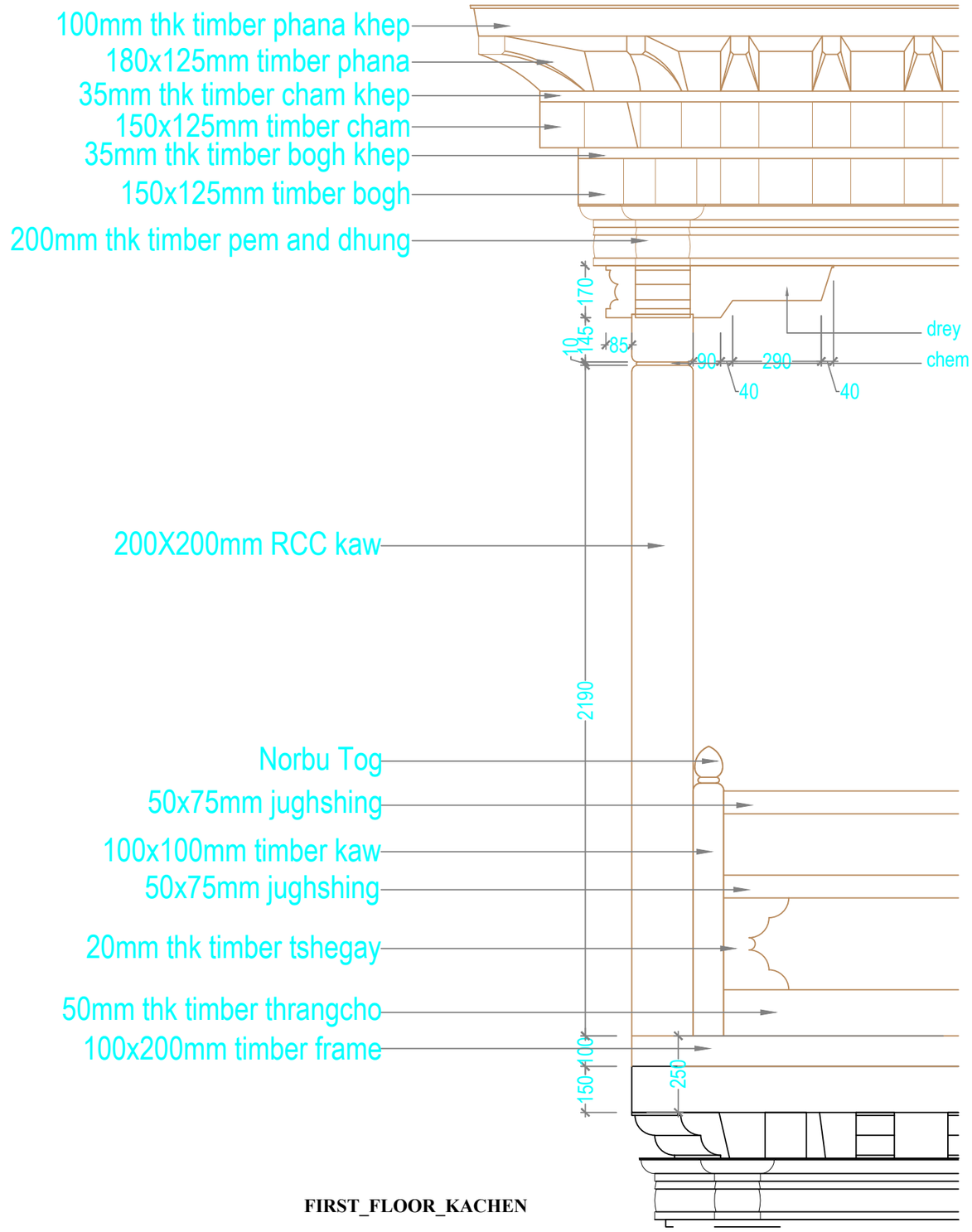

FIRST_FLOOR_KACHEN

Khorlochhu

ARCHITECTURAL DRAWING

PROJECT TITLE	DRAWING TITLE
Construction of Doksum Primary School	KACHEN_DETAILS

NOTES

1. ALL DIMENSIONS ARE IN MILLIMETER & ELEVATION IN METER UNLESS SPECIFIED OTHERWISE.
2. ALL DIMENSIONS MEASURE UNFINISHED SURFACES UNLESS SPECIFIED OTHERWISE.
3. DIMENSIONS ARE TO BE READ AND NOT SCALED OFF.
4. ANY DISCREPANCIES IN THE DRAWING ARE TO BE BROUGHT TO THE IMMEDIATE NOTICE OF THE SUPERVISION TEAM.

CHECKED	APPROVED	DATE	DRAWING NO.
			AR_13
		MARCH, 2026	SCALE
			NTS

STRUCTURAL DRAWINGS

LAB/LIB BLOCK

Owner - Khorlochhu Hydro Power Limited
Location - Doksum New Township, Trashiyangtse

Khorlochhu

GENERAL NOTES FOR STRUCTURAL DRAWINGS.

A. GENERAL

1. STRUCTURAL DRAWINGS SHALL BE READ IN CONJUNCTION WITH ARCHITECTURAL DRAWINGS AND OTHER ENGINEERS' DRAWINGS AND SPECIFICATIONS AND SUCH OTHER WRITTEN INSTRUCTIONS MAY BE ISSUED.
2. ALL DIMENSIONS ARE IN MM AND RELATIVE LEVEL IN M UNLESS STATED OTHERWISE.
3. DIMENSIONS SHALL NOT BE SCALED FROM THE DRAWINGS.
4. DESIGN CONFORMS TO:
   (a). IS 4326:1993 EARTHQUAKE RESISTANT DESIGN AND CONSTRUCTION OF BUILDINGS.
   (b). IS 456:2000 CODE OF PRACTICE FOR PLAIN & REINFORCED CONCRETE.
   (c). IS13920:1993 DUCTILE DETAILING OF REINFORCED CONCRETE STRUCTURES SUBJECTED TO SEISMIC FORCES.
   (d).BUILDING CODE OF BHUTAN 2003
   (e). IS1893:2002 SEISMIC RESISTANT DESIGN OF STRUCTURES.
   (f). IS 800, SP 38 (S&T)-1987
5. VERIFY ALL SETTING OUT DIMENSIONS WITH ENGINEER/ARCHITECT.
6. REFER ANY DISCREPANCY TO ENGINEER/ARCHITECT BEFORE PROCEEDING THE WORK.
7. ALL CONSTRUCTION MATERIALS AND WORKMANSHIP SHALL COMPLY WITH THE SPECIFICATIONS FOR BUILDING AND ROAD WORKS TOGETHER WITH THE REQUIREMENTS OF ALL RELEVANT CODES OF PRACTICE REFERRED TO HEREIN AND THE REQUIREMENTS OF ALL STATUTORY AUTHORITIES.
8. ALWAYS REFER ADDITIONAL NOTES PROVIDED IN THE DRAWINGS.

B. FOUNDATIONS AND FOOTINGS.

1. FOOTINGS ARE DESIGNED FOR AN ALLOWABLE BEARING CAPACITY OF 180 KN/Sq M. VERIFY THE SOIL STRENGTH AND OBTAIN APPROVAL FROM THE ENGINEER BEFORE PLACING THE CONCRETE.
2. WALLS SHALL BE PROVIDED BELOW THE EXTERIOR PLINTH BEAM. IT IS RECOMMENDED TO PROVIDE THE SAME BELOW THE INTERNAL PLINTH BEAM.
3. FOOTINGS ARE DESIGNED CONSIDERING THE MINIMUM DEPTH OF 1500MM BELOW THE ORIGINAL GROUND LEVEL. NOTIFY ENGINEER SHOULD THE DEPTH OF FOOTINGS REQUIRED TO BE PROVIDED IS MORE THAN THE DEPTH SPECIFIED ABOVE.
4. ALL CONCRETE SHALL BE PLACED 'IN THE DRY' FOR FOUNDATIONS.
5. COMPACTION OF FOUNDATION SHALL BE APPROVED BY ENGINEER PRIOR TO PLACEMENT OF CONCRETE.

C. LOADING

1. THIS STRUCTURE HAS BEEN DESIGNED FOR THE FOLLOWING LOADS.
   (a). DEAD LOADS;

UNIT WEIGHT OF CONCRETE BLOCK BRICK	16.79KN/M3
UNIT WEIGHT OF RCC	25KN/M3
UNIT WEIGHT OF PCC	24KN/M3
UNIT WEIGHT OF STONE	28KN/M3

   (b). SUPERIMPOSED (LIVE LOADS)

GROUND FLOOR	3KN/M2
SUPERIMPOSED (LIVE LOADS)	
Ground Floor & 1st Floor	3KN/M2
LIVE LOAD FOR ROOF FLOORS	0.75KN/M2
LIVE LOAD FOR STAIRCASE	4KN/M2

   (c). WIND LOAD

WIND PRESSURE	45.6M/S (AS CALCULATED)

   (d). OTHER LOADS:
   EARTHQUAKE LOAD IN ACCORDANCE WITH IS 1893:2002 ASSUMING ZONE V
   SUPERIMPOSED DEAD LOAD 1KN/M2
2. MAINTAIN STRUCTURE IN STABLE CONDITION DURING CONSTRUCTION.
3. DO NOT PLACE OR STORE BUILDING MATERIALS ON CONCRETE MEMBERS WITHOUT ENGINEER'S APPROVAL.

D. CONCRETE.

1. CONCRETE QUALITY SHALL COMPLY WITH IS 456:2000
2. PROJECT ASSESSMENT OF CONCRETE STRENGTH IS REQUIRED.
3. GRADE OF CONCRETE IS M20 FOR ALL RCC WORKS. (1:1.5:3=1 cement:1.5 Sand: 3 Aggregates)
4. FOR THE ABOVE GRADE TO BE ACHIEVED, MAXIMUM FREE WATER-CEMENT RATIO SHALL BE 0.55, MINIMUM CEMENT CONTENT SHALL BE 300KG/M3 AND MAXIMUM AMOUNT OF WATER SHALL BE 180L.
5. WATER USED FOR MIXING AND CURING SHALL COMPLY WITH CLAUSE 5.4 OF IS 456:2000.

6. MECHANICALLY VIBRATE CONCRETE IN THE FORM TO GIVE MAXIMUM COMPACTION WITHOUT SEGREGATION OF THE CONCRETE.
7. CURE CONCRETE AS REQUIRED BY THE CLAUSE 13.5 OF IS456:2000 AND WORK SPECIFICATIONS.
8. CONCRETE SIZES AS DRAWN ARE MINIMUM AND DO NOT INCLUDE APPLIED FINISHES.
9. DO NOT MAKE UNSPECIFIED HOLES OR CHASES WITHOUT ENGINEER'S APPROVAL.
10. DO NOT PLACE CONDUITS, PIPES AND THE LIKE WITHIN COVER CONCRETE.
11. AGGREGATES SHALL COMPLY WITH CLAUSE 5.3 OF IS456:2000. NOMINAL SIZE OF COARSE AGGREGATES SHALL BE 20MM.
12. THE CHARACTERISTICS STRENGTH OF CONCRETE AT 28 DAYS SHALL BE 20MPA. NOTE THAT THE MEAN COMPRESSIVE STRENGTH OBTAINED FROM THE LABORATORY HAS TO BE WELL ABOVE THIS VALUE.
13. ALL FORMWORKS FOR BEAMS AND SLABS ARE TO REMOVED BEFORE CONSTRUCTION OF WALLS OR OTHER PERMANENT LOADINGS. ALL FORMWORK AND ITS REMOVAL MUST BE IN ACCORDANCE TO IS 456:2000.

E. REINFORCEMENT.

1. GRADE OF STEEL USED FOR RCC WORKS SHALL BE FE500.
2. BAR NOTATION GIVES THE FOLLOWING INFORMATION IN THIS ORDER: NUMBER OF BARS BAR SIZE(MM),SPACING(MM, IF REQUIRED).
3. REINFORCEMENT IS REPRESENTED DIAGRAMMATICALLY AND NOT NECESSARILY IN TRUE PROJECTION.
4. LAP REINFORCEMENT ONLY AT LOCATIONS SHOWN IN THE DRAWINGS. LAP LENGTH SHALL COMPLY WITH IS456:2000. LAP SPLICES SHALL NOT BE LESS THAN THE DEVELOPMENT LENGTH IN TENSION(GENERALLY 57Ø).
5. REINFORCEMENT SHALL NOT BE CUT, BENT OR HEATED ON SITE WITHOUT ENGINEER'S APPROVAL.
6. THE DEVIATION OF REINFORCEMENT FROM ITS SPECIFIED POSITION SHALL NOT EXCEED THE FOLLOWING(MM)
   (a). TOLERANCE FOR COVER -0,+10MM. WHERE A NEGATIVE VALUE INDICATE A DECREASE IN SPECIFIED COVER, AND POSITIVE VALUE INDICATES AN INCREASE IN COVER.
   (b). TOLERANCE ON PLACEMENT OF REINFORCEMENT.
   FOR SLABS AND STAIRCASE -10,+10MM.
   FOR BEAMS, COLUMNS AND FOUNDATION -15,+15MM.
7. SPACERS AND SUPPORTS SHALL BE LOCATED AT CENTERS CLOSE ENOUGH (PREFERABLY NOT EXCEEDING 750MM C/C FOR COLUMN AND BEAM REINFORCEMENT AND 450MM FOR SLAB REINFORCEMENT). TO PREVENT DISPLACEMENT OF REINFORCEMENT BY WORKMEN OR EQUIPMENT DURING FIXING AND SUBSEQUENT CONCRETE PLACEMENT WITHIN TOLERANCE GIVEN ABOVE.
8. THE COVER TO THE REINFORCEMENT NEAREST THE CONCRETE SURFACE SHALL NOT LESS THAN THE FOLLOWING EXCEPT WHERE SPECIFIED OTHERWISE:

BEAMS	30MM
COLUMNS	40MM
FLOOR SLABS AND STAIRCASE	20MM
FOUNDATION	50MM

9. BENDING OF REINFORCEMENT IN BEAMS AND COLUMNS SHALL COMPLY WITH THE REQUIREMENTS OF IS 456:2000
10. FORMWORK SHALL COMPLY WITH CLAUSE 11 OF IS 456:2000
11. STRIPPING OF FORMWORK SHALL COMPLY WITH CLAUSE 11.3 OF IS:456:2000

F. WELDING AND BOLTING.

1. WELDING TO BE CARRIED OUT IN ACCORDANCE WITH IS 816:1969, IS 819:1957, IS 1024:1979, IS 1261:1959, IS 1323:1982 AND IS: 9595: 1980 AS APPROPRIATE.
2. THE STRENGTH OF ELECTRODE USED FOR WELDING SHALL BE EQUAL TO OR GREATER THAN THE STRENGTH OF MEMBER THAT IS BEING WELDED.
3. ALL WELD SHALL BE COMPLETE PENETRATION BUTT WELD.
4. ALL BOLTS SHALL BE HIGH STRENGTH FRICTION GRIP GALVANIZED M16 AND M20 IN ACCORDANCE WITH IS 3757:1967 AND IS 800: 1984.
5. ALL MEMBERS OF STEEL TRUSS SHALL BE DRY AND THOROUGHLY CLEANED FROM ALL LOOSE SCALE AND RUST PRIOR TO PAINTING.
6. THE MEMBERS SHALL BE PROVIDED WITH COAT OF ZINC COATING.

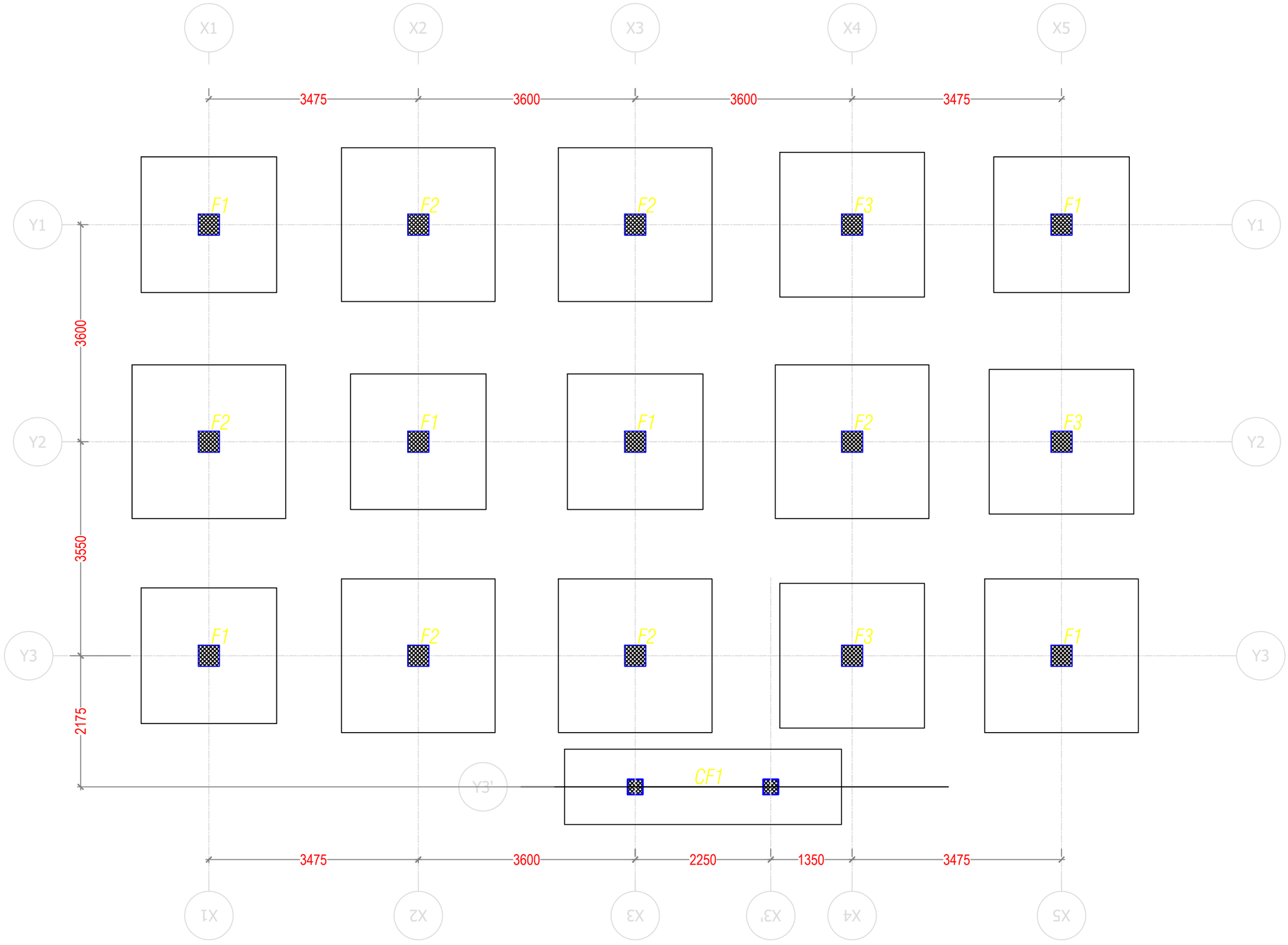

Khorlochhu

STRUCTURAL DRAWING

PROJECT TITLE	DRAWING TITLE
Construction of Doksum Primary School	FOOTING_PLAN_LAYOUT

NOTES

1. ALL DIMENSIONS ARE IN MILLIMETER & ELEVATION IN METER UNLESS SPECIFIED OTHERWISE.
2. ALL DIMENSIONS MEASURE UNFINISHED SURFACES UNLESS SPECIFIED OTHERWISE.
3. DIMENSIONS ARE TO BE READ AND NOT SCALED OFF.
4. ANY DISCREPANCIES IN THE DRAWING ARE TO BE BROUGHT TO THE IMMEDIATE NOTICE OF THE SUPERVISION TEAM.

CHECKED	APPROVED	DATE	DRAWING NO.
			STR_03
		MARCH, 2026	SCALE
			NTS

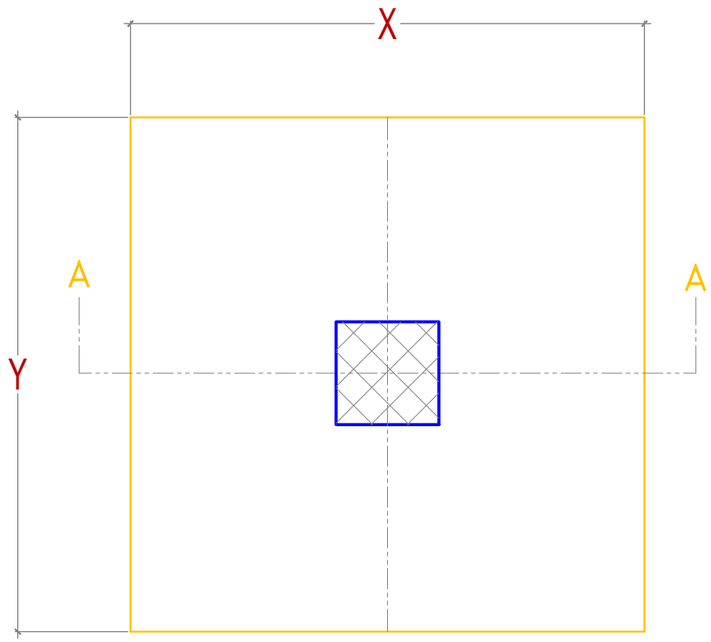

Typical Footing Plan

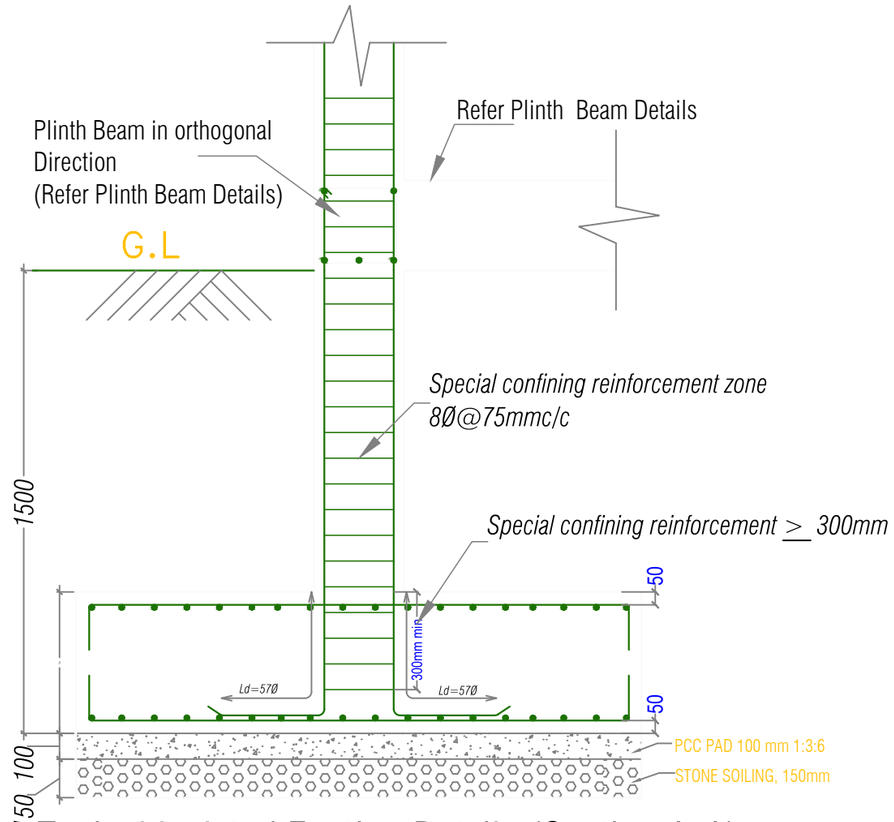

Typical Isolated Footing Details (Section A-A)

		FOOTING SCHEDULE			
Footing Type	Size (X x Y)	Column Size (X x Y)	D	RFT BAR IN Bottom (Bothways)	RFT BAR IN Top (Bothways)
F1	2250 X 2250	350 X 350	400	12Ø@235 c/c	12Ø@ 290c/c
F2	2550 x 2550	350 X 350	450	12Ø@210 c/c	12Ø@ 250c/c
F3	2400 x 2400	350 X 350	450	12Ø@210c/c	12Ø@ 290 c/c

Isolated Footing Details

Khorlochhu

STRUCTURAL DRAWING

PROJECT TITLE	DRAWING TITLE
Construction of Doksum Primary School	FOOTING_DETAILS

NOTES

1. ALL DIMENSIONS ARE IN MILLIMETER & ELEVATION IN METER UNLESS SPECIFIED OTHERWISE.
2. ALL DIMENSIONS MEASURE UNFINISHED SURFACES UNLESS SPECIFIED OTHERWISE.
3. DIMENSIONS ARE TO BE READ AND NOT SCALED OFF.
4. ANY DISCREPANCIES IN THE DRAWING ARE TO BE BROUGHT TO THE IMMEDIATE NOTICE OF THE SUPERVISION TEAM.

CHECKED	APPROVED	DATE	DRAWING NO.
			STR_04
		MARCH, 2026	SCALE
			NTS

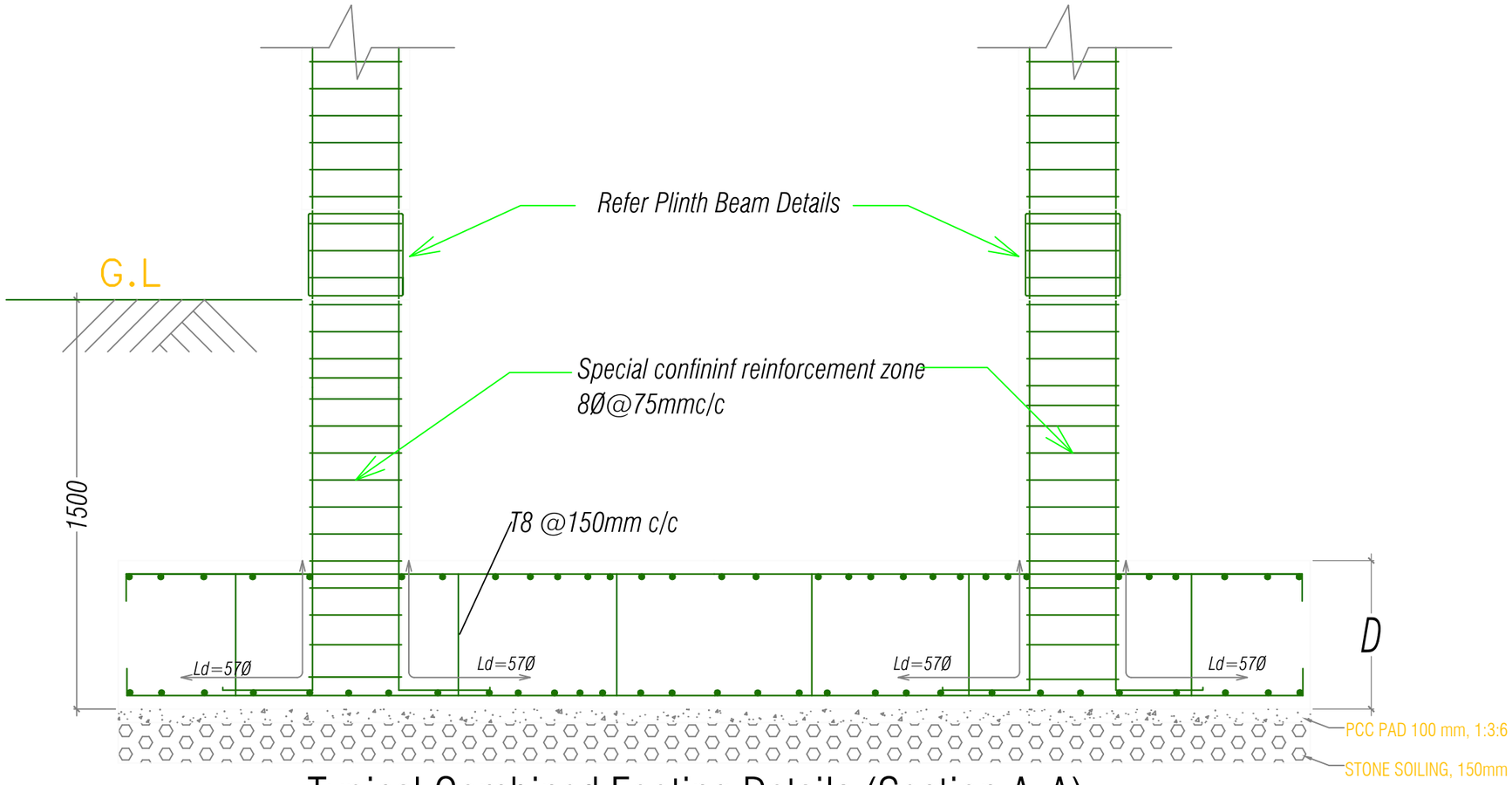

Typical Combined Footing Details (Section A-A)

		FOOTING SCHEDULE			
Footing Type	Size (X x Y)	Column Size (X x Y)	D	RFT BAR IN Bottom (Bothways)	RFT BAR IN Top (Bothways)
CF1	4595 X 1250	250 X 250	500	12Ø@ 185 c/c	12Ø@ 200/c

Combined Footing Details

Khorlochhu

STRUCTURAL DRAWING		NOTES	CHECKED	APPROVED	DATE	DRAWING NO.
PROJECT TITLE	DRAWING TITLE	1. ALL DIMENSIONS ARE IN MILLIMETER & ELEVATION IN METER UNLESS SPECIFIED OTHERWISE. 2. ALL DIMENSIONS MEASURE UNFINISHED SURFACES UNLESS SPECIFIED OTHERWISE. 3. DIMENSIONS ARE TO BE READ AND NOT SCALED OFF. 4. ANY DISCREPANCIES IN THE DRAWING ARE TO BE BROUGHT TO THE IMMEDIATE NOTICE OF THE SUPERVISION TEAM.				STR_05
Construction of Doksum Primary School	FOOTING_DETAILS				MARCH, 2026	SCALE NTS

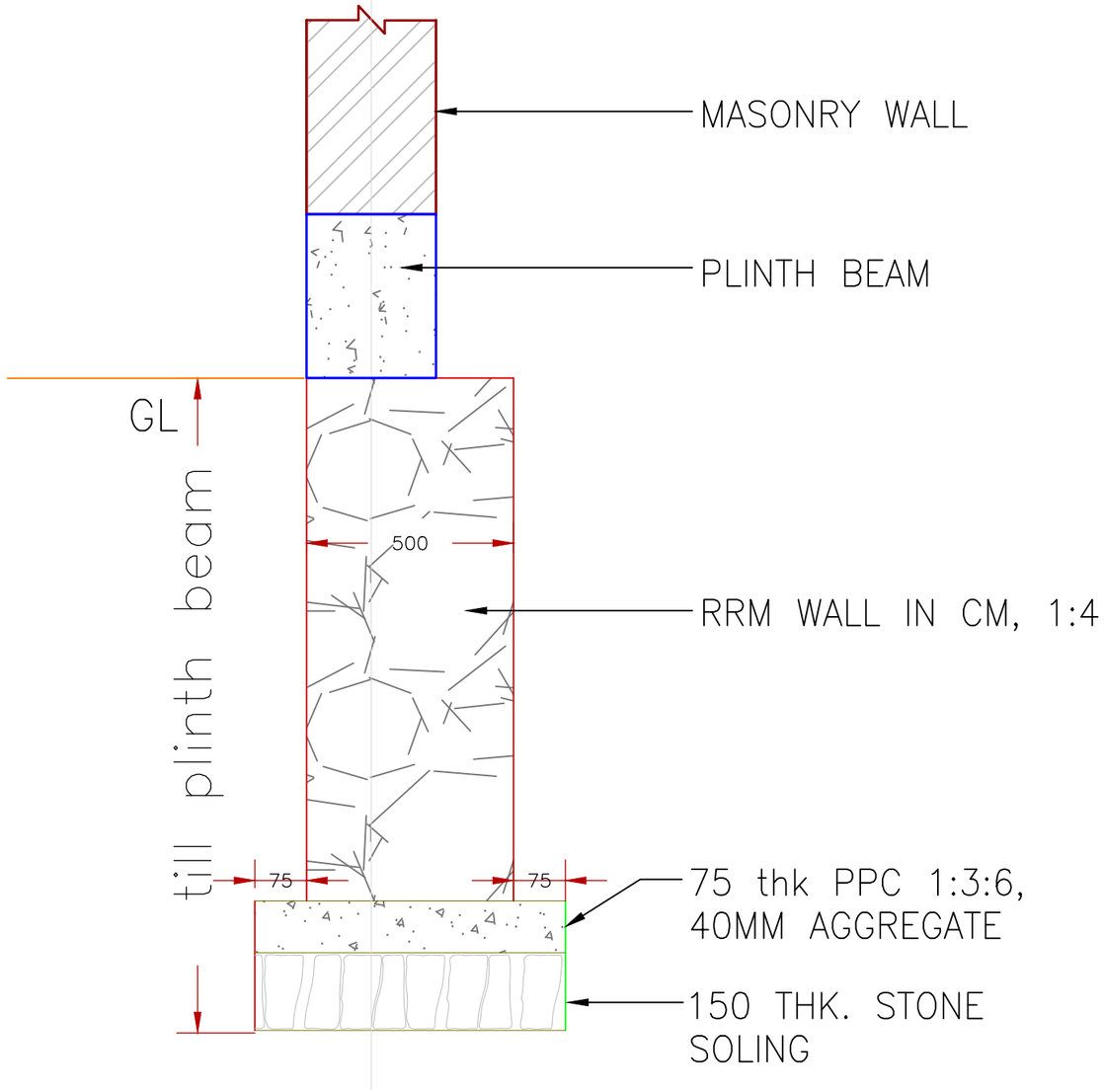

RRM WALL BELOW EXTERNAL PLINTH BEAM

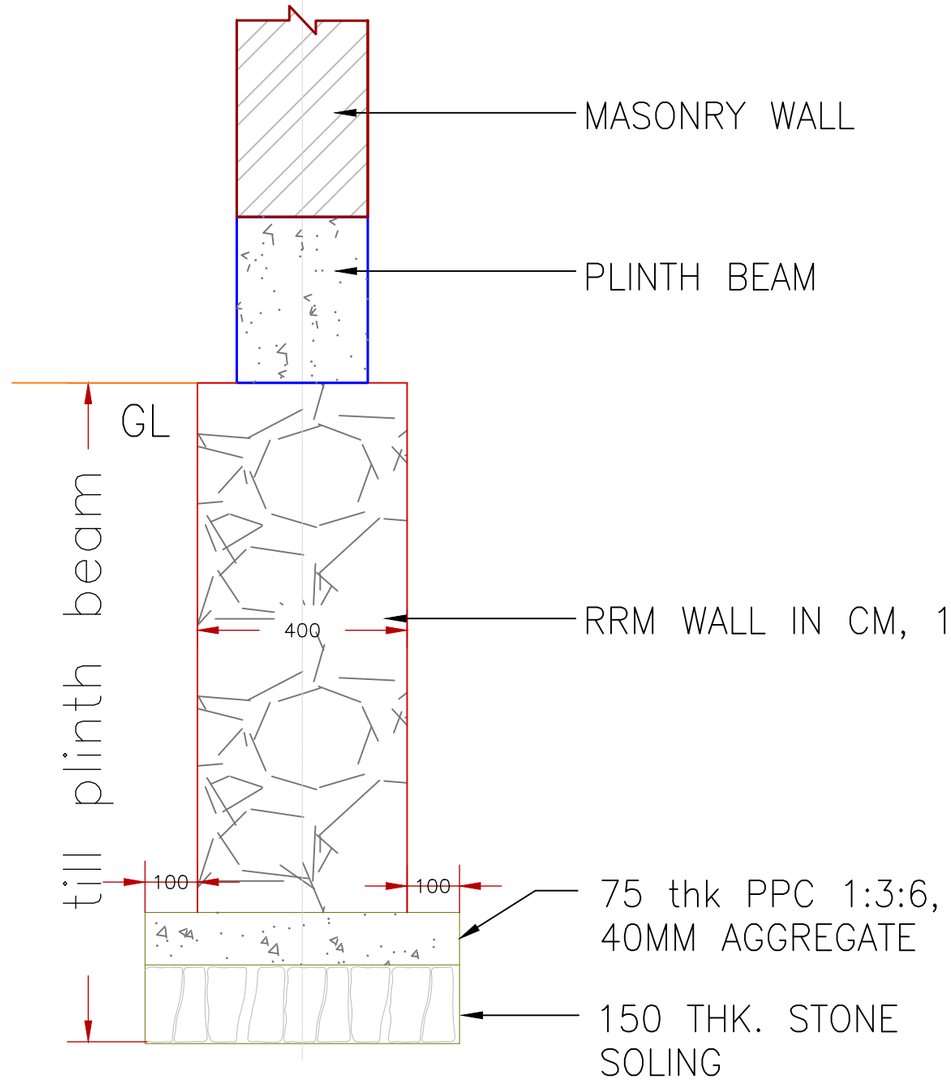

RRM WALL BELOW INTERNAL PLINTH BEAM

TYPICAL FOUNDATION WALL DETAILS

Khorlochhu

STRUCTURAL DRAWING		NOTES	CHECKED	APPROVED	DATE	DRAWING NO.
PROJECT TITLE	DRAWING TITLE	1. ALL DIMENSIONS ARE IN MILLIMETER & ELEVATION IN METER UNLESS SPECIFIED OTHERWISE. 2. ALL DIMENSIONS MEASURE UNFINISHED SURFACES UNLESS SPECIFIED OTHERWISE. 3. DIMENSIONS ARE TO BE READ AND NOT SCALED OFF. 4. ANY DISCREPANCIES IN THE DRAWING ARE TO BE BROUGHT TO THE IMMEDIATE NOTICE OF THE SUPERVISION TEAM.				STR_06
Construction of Doksum Primary School	RRM_WALL_DETAILS				MARCH, 2026	SCALE NTS

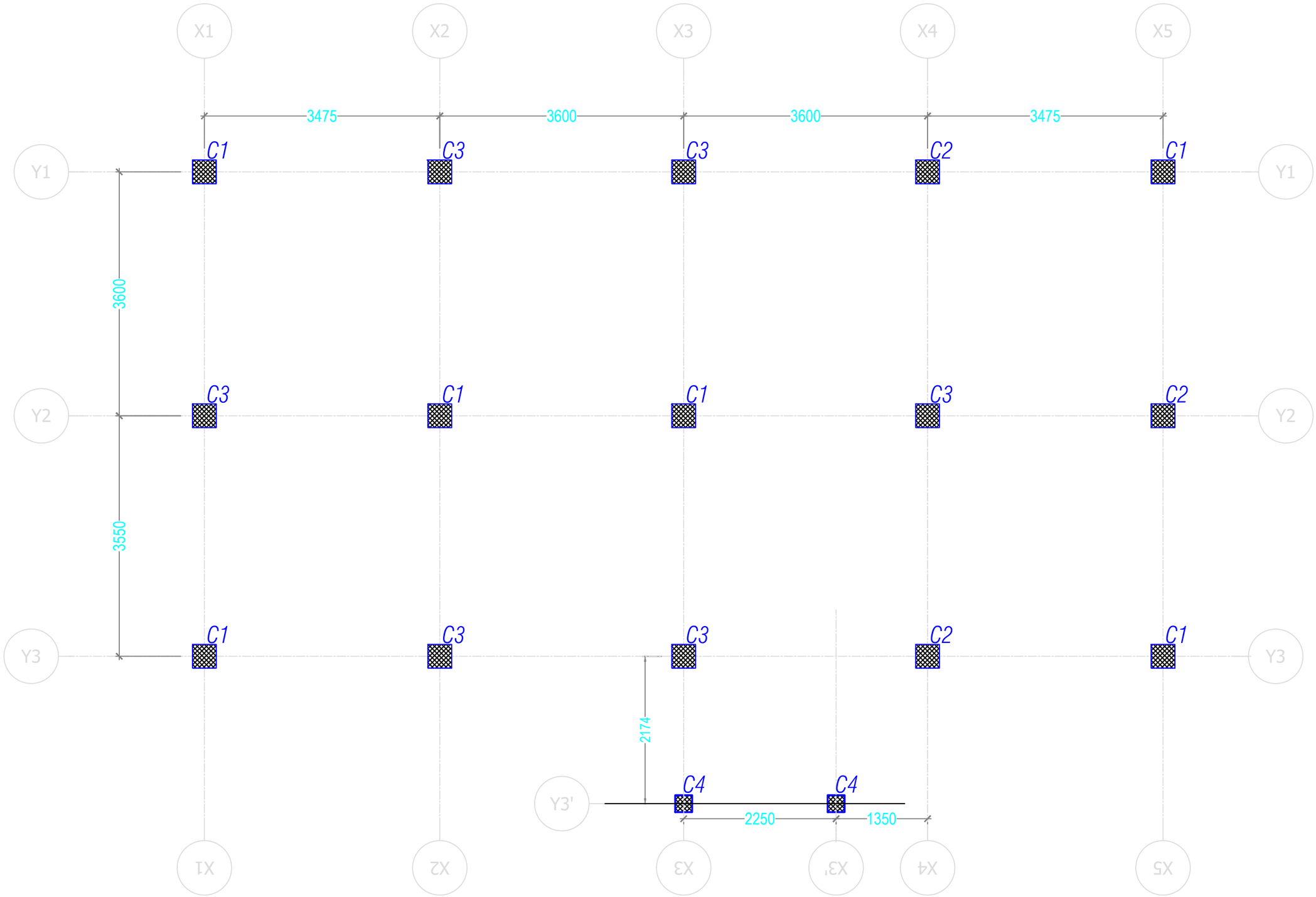

Khorlochhu

STRUCTURAL DRAWING

PROJECT TITLE	DRAWING TITLE
Construction of Doksum Primary School	COLUMN_LAYOUT_PLAN

NOTES

1. ALL DIMENSIONS ARE IN MILLIMETER & ELEVATION IN METER UNLESS SPECIFIED OTHERWISE.
2. ALL DIMENSIONS MEASURE UNFINISHED SURFACES UNLESS SPECIFIED OTHERWISE.
3. DIMENSIONS ARE TO BE READ AND NOT SCALED OFF.
4. ANY DISCREPANCIES IN THE DRAWING ARE TO BE BROUGHT TO THE IMMEDIATE NOTICE OF THE SUPERVISION TEAM.

CHECKED	APPROVED	DATE	DRAWING NO.
			STR_07
		MARCH, 2026	SCALE
			NTS

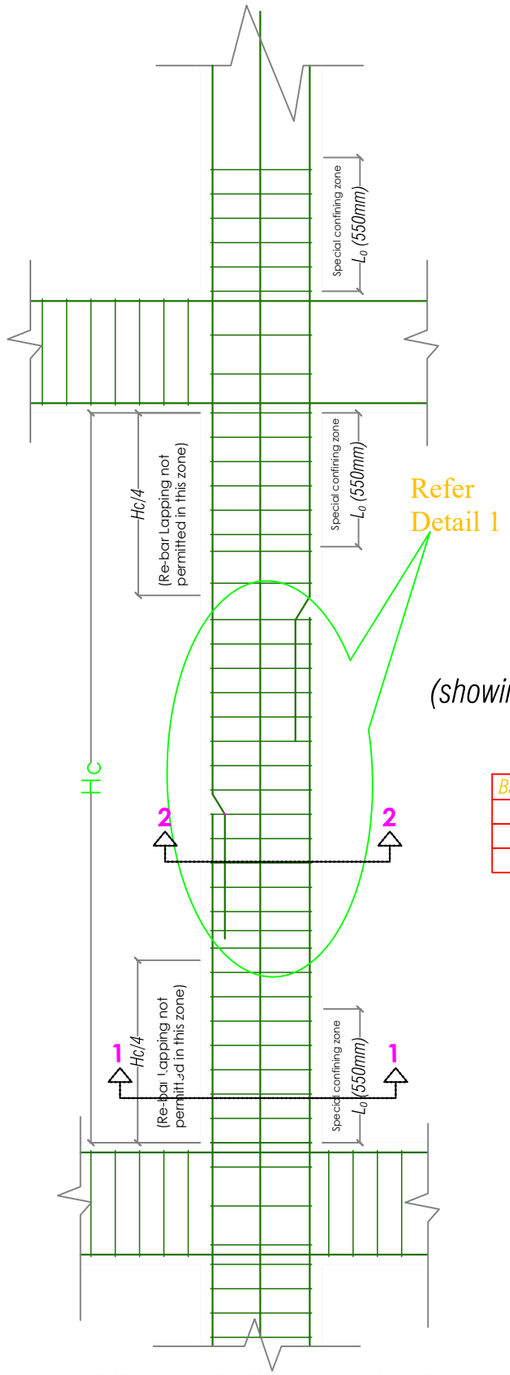

TYPICAL SECTION (showing Typical arrangement of Rebar and Ties in columns)

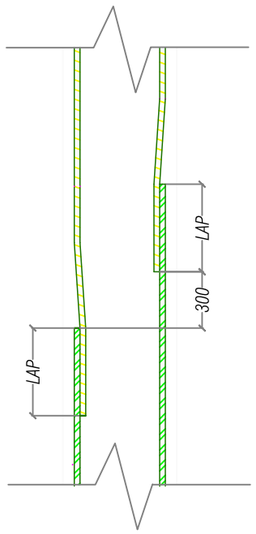

DETAIL 1
(showing staggering of laps in columns)

Bar Dia.	Splice Length
16Ø	912
20Ø	1140
25Ø	1425

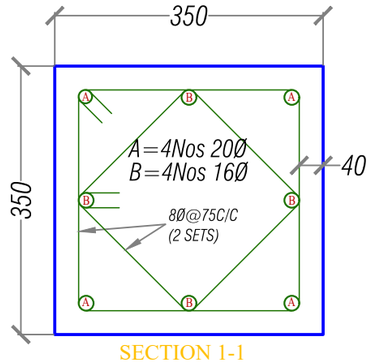

SECTION 1-1
(All columns shown as C1)

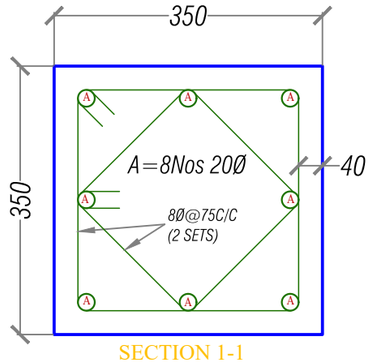

SECTION 1-1
(All columns shown as C2)

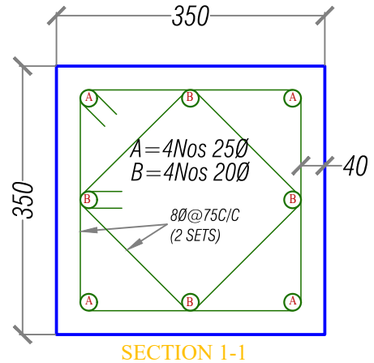

SECTION 1-1
(All columns shown as C3)

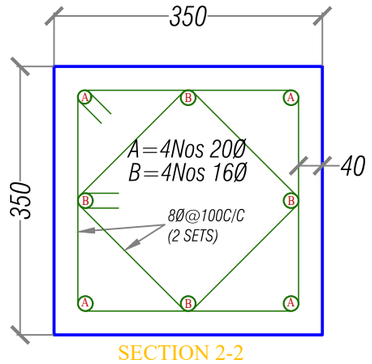

SECTION 2-2
(All columns shown as C1)

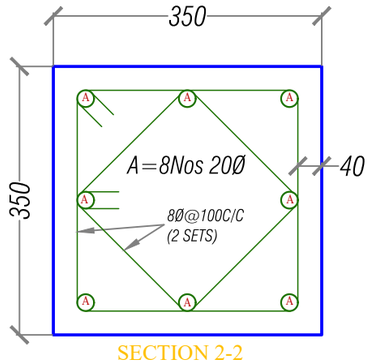

SECTION 2-2
(All columns shown as C2)

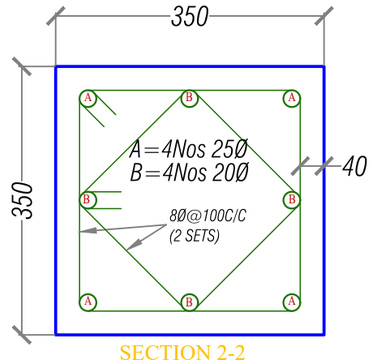

SECTION 2-2
(All columns shown as C3)

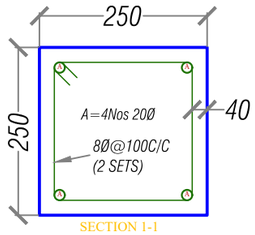

SECTION 1-1
(All columns shown as C4)

Khorlochhu

STRUCTURAL DRAWING

PROJECT TITLE	DRAWING TITLE
Construction of Doksum Primary School	COLUMN_DETAILS

NOTES

1. ALL DIMENSIONS ARE IN MILLIMETER & ELEVATION IN METER UNLESS SPECIFIED OTHERWISE.
2. ALL DIMENSIONS MEASURE UNFINISHED SURFACES UNLESS SPECIFIED OTHERWISE.
3. DIMENSIONS ARE TO BE READ AND NOT SCALED OFF.
4. ANY DISCREPANCIES IN THE DRAWING ARE TO BE BROUGHT TO THE IMMEDIATE NOTICE OF THE SUPERVISION TEAM.

CHECKED	APPROVED	DATE	DRAWING NO.
			STR_08
		MARCH, 2026	SCALE
			NTS

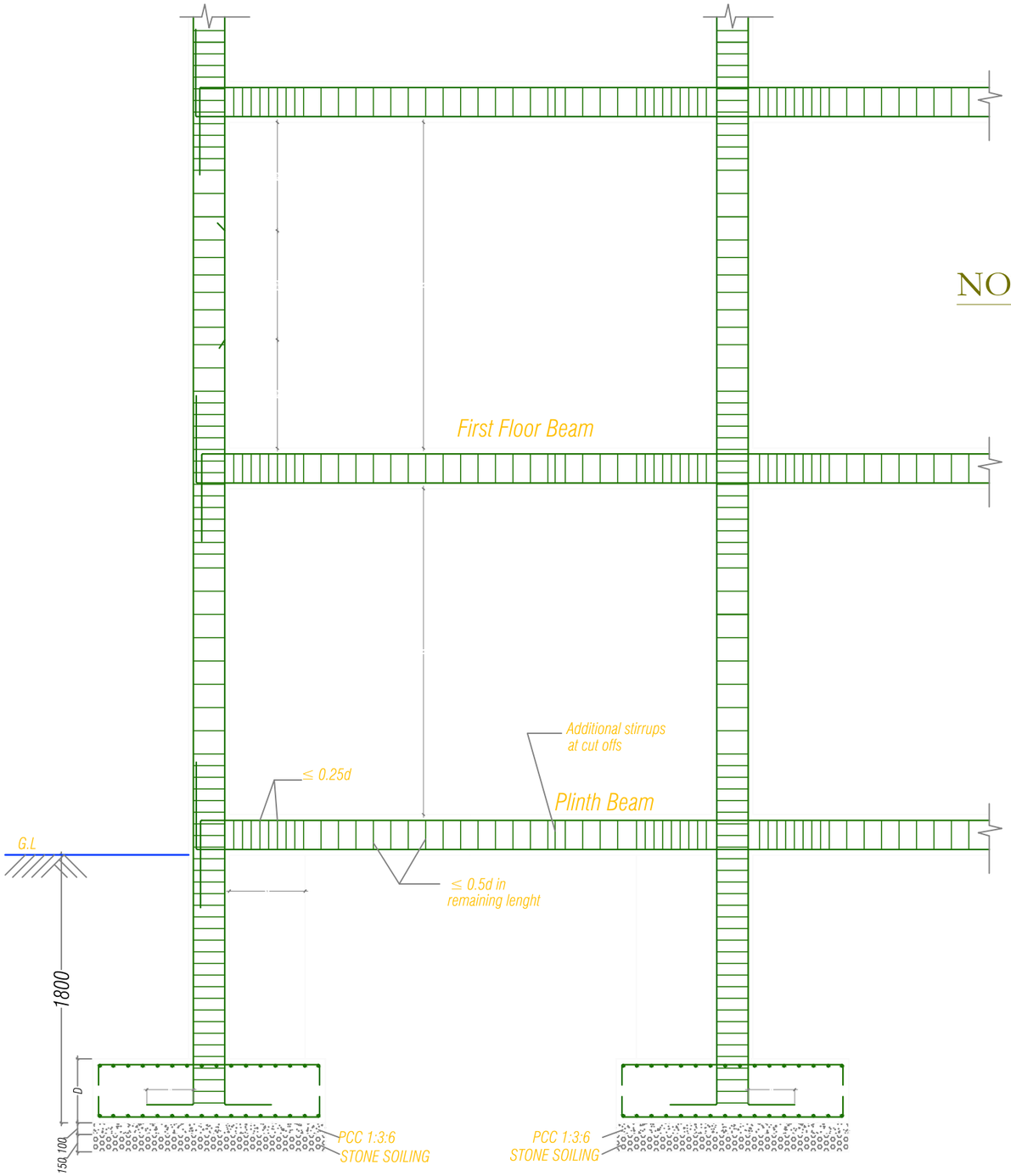

BEAM-COLUMN JUNCTION DETAILING

NOTE:

Clear Cover Details:

1. The clear cover to all footings should be 50 mm
2. The clear cover to all columns should be 40 mm
3. The clear cover to all beams should be 30 mm
4. The clear cover to all slabs should be 25 mm

Reinforcement Details

1. Not more than 50% of bars shall be spliced at one section both in beams and cloumns.
2. Column bars shall be spliced at a distance of Hc/4 from the face of support
3. No lap splice in columns are provided in first storey
4. Top bars in the beam shall splice at midspan while bottom bars shall be spliced at a distance of 2d from the face of the column but not at mid span
5. Full lenght of splice stirrups in ties in column shall be 8Ø @ 100mm c/c
6. The column encasing the stair case shall be provide with special confining reinforcement 8Ø @ 75mm c/c throughout the height of column

Khorlochhu	STRUCTURAL DRAWING	NOTES	CHECKED	APPROVED	DATE	DRAWING NO.
	PROJECT TITLE: Construction of Doksum Primary School	1. ALL DIMENSIONS ARE IN MILLIMETER & ELEVATION IN METER UNLESS SPECIFIED OTHERWISE. 2. ALL DIMENSIONS MEASURE UNFINISHED SURFACES UNLESS SPECIFIED OTHERWISE. 3. DIMENSIONS ARE TO BE READ AND NOT SCALED OFF. 4. ANY DISCREPANCIES IN THE DRAWING ARE TO BE BROUGHT TO THE IMMEDIATE NOTICE OF THE SUPERVISION TEAM.				STR_09
	DRAWING TITLE: COLUMN_BEAM_JUNCTION_DETAILS				MARCH, 2026	SCALE: NTS

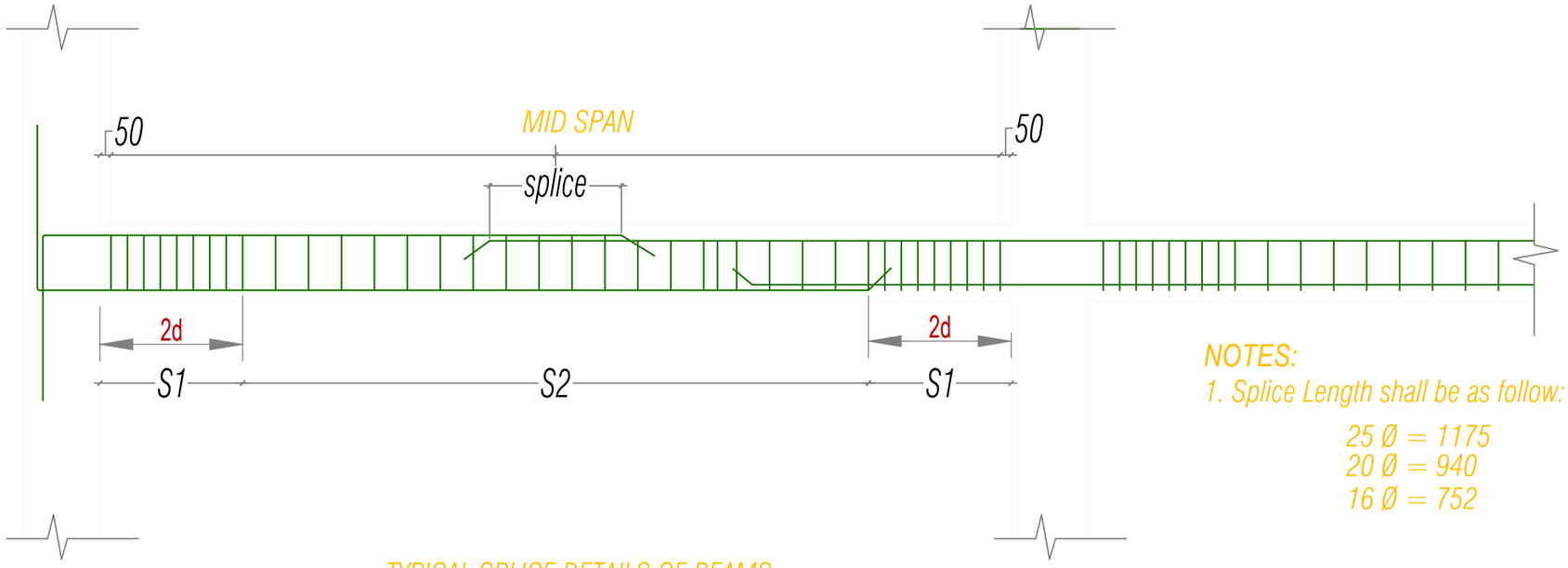

NOTES:
1. Splice Length shall be as follow:

25 Ø = 1175
20 Ø = 940
16 Ø = 752

TYPICAL SPLICE DETAILS OF BEAMS

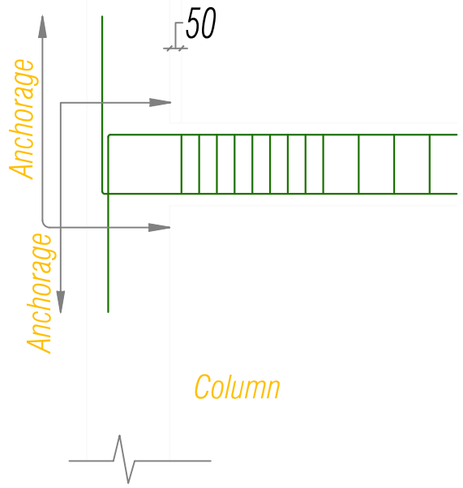

ANCHORAGE
DETAILS AT - A

Bar Anchorage Length
(Minimum Length = 57Ø)
16 Ø = 912
20 Ø = 1140
25 Ø = 1425

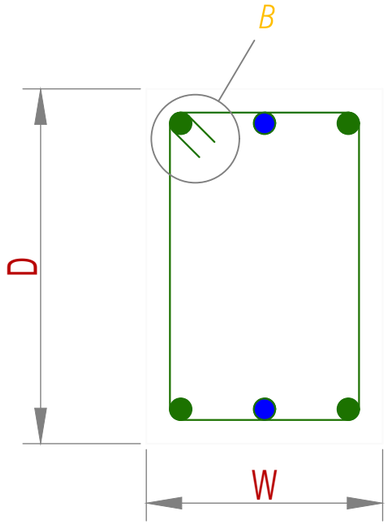

BEAM STIRRUPS DETAILS

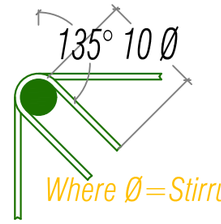

Where Ø=Stirrup dia

DETAILS AT - B

Stirrups in the Beams

Location	: Stirrups provided
2d	: 8Ø@100c/c
S1	: 8Ø@150c/c
Splice	: 8Ø@100c/c

Typical Floor Beam Details

Khorlochhu	STRUCTURAL DRAWING	NOTES	CHECKED	APPROVED	DATE	DRAWING NO.
	PROJECT TITLE: Construction of Doksum Primary School	1. ALL DIMENSIONS ARE IN MILLIMETER & ELEVATION IN METER UNLESS SPECIFIED OTHERWISE. 2. ALL DIMENSIONS MEASURE UNFINISHED SURFACES UNLESS SPECIFIED OTHERWISE. 3. DIMENSIONS ARE TO BE READ AND NOT SCALED OFF. 4. ANY DISCREPANCIES IN THE DRAWING ARE TO BE BROUGHT TO THE IMMEDIATE NOTICE OF THE SUPERVISION TEAM.				STR_10
	DRAWING TITLE: TYPICAL_FLOOR_BEAM_DETAILS				MARCH, 2026	SCALE: NTS

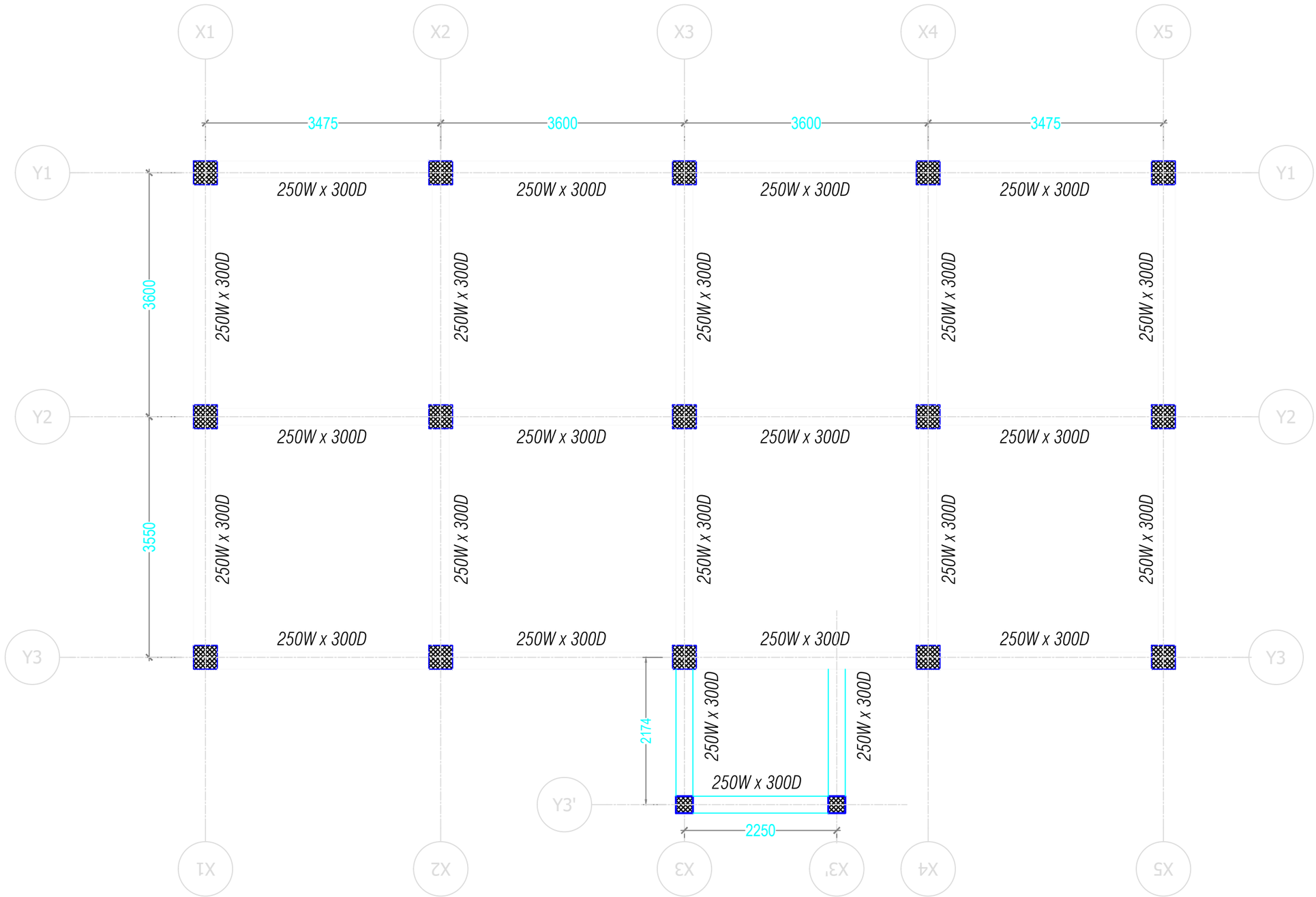

PLINTH BEAM LAYOUT PLAN

Khorlochhu	STRUCTURAL DRAWING	NOTES	CHECKED	APPROVED	DATE	DRAWING NO.
	PROJECT TITLE: Construction of Doksum Primary School	1. ALL DIMENSIONS ARE IN MILLIMETER & ELEVATION IN METER UNLESS SPECIFIED OTHERWISE. 2. ALL DIMENSIONS MEASURE UNFINISHED SURFACES UNLESS SPECIFIED OTHERWISE. 3. DIMENSIONS ARE TO BE READ AND NOT SCALED OFF. 4. ANY DISCREPANCIES IN THE DRAWING ARE TO BE BROUGHT TO THE IMMEDIATE NOTICE OF THE SUPERVISION TEAM.				STR_11
	DRAWING TITLE: PLINTH_BEAM_LAYOUT_PLAN				MARCH, 2026	SCALE: NTS

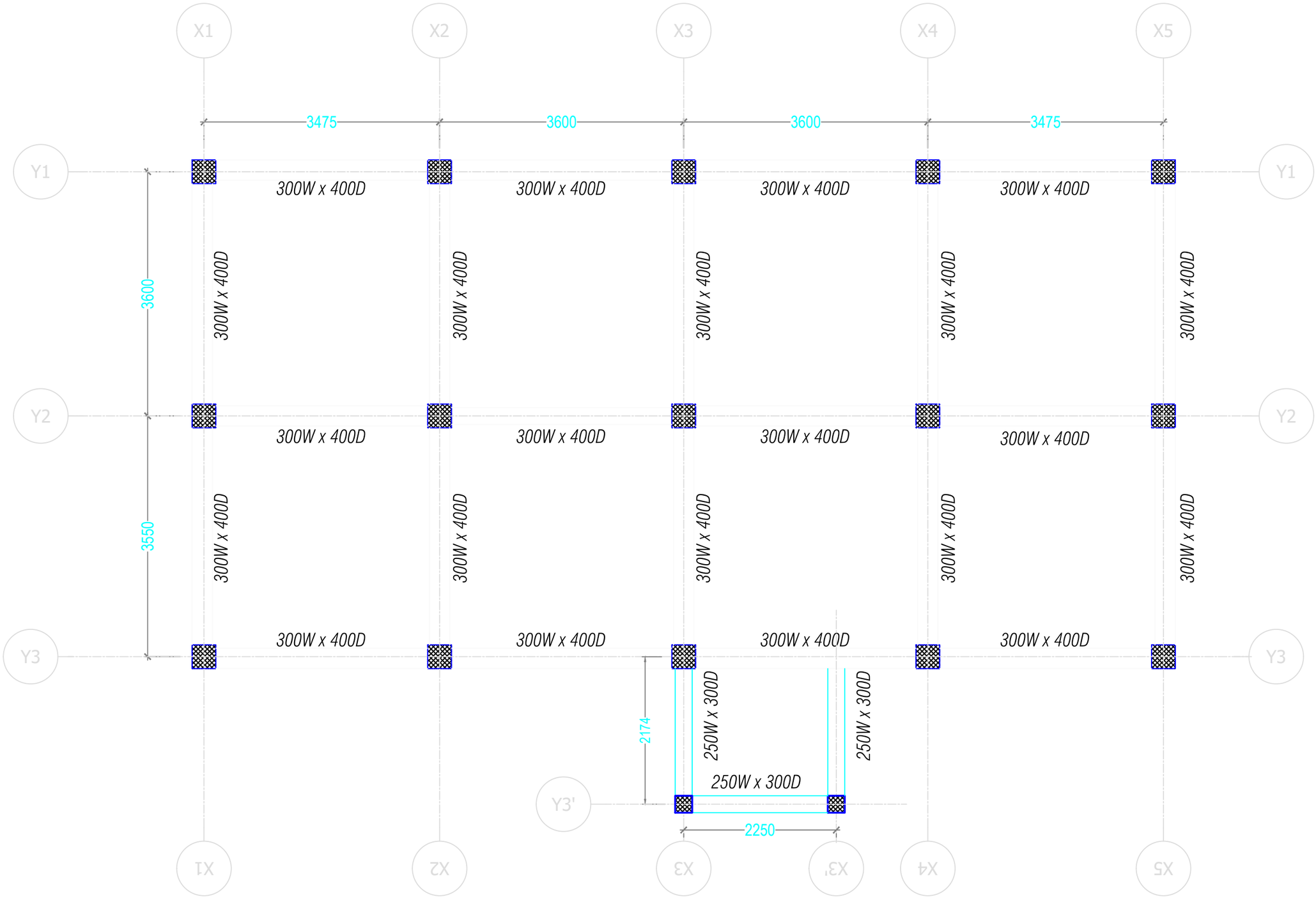

FIRST FLOOR BEAM LAYOUT PLAN

Khorlochhu

STRUCTURAL DRAWING

PROJECT TITLE	DRAWING TITLE
Construction of Doksum Primary School	FIRST_BEAM_LAYOUT_PLAN

NOTES

1. ALL DIMENSIONS ARE IN MILLIMETER & ELEVATION IN METER UNLESS SPECIFIED OTHERWISE.
2. ALL DIMENSIONS MEASURE UNFINISHED SURFACES UNLESS SPECIFIED OTHERWISE.
3. DIMENSIONS ARE TO BE READ AND NOT SCALED OFF.
4. ANY DISCREPANCIES IN THE DRAWING ARE TO BE BROUGHT TO THE IMMEDIATE NOTICE OF THE SUPERVISION TEAM.

CHECKED	APPROVED	DATE	DRAWING NO.
			STR_12
		MARCH, 2026	SCALE
			NTS

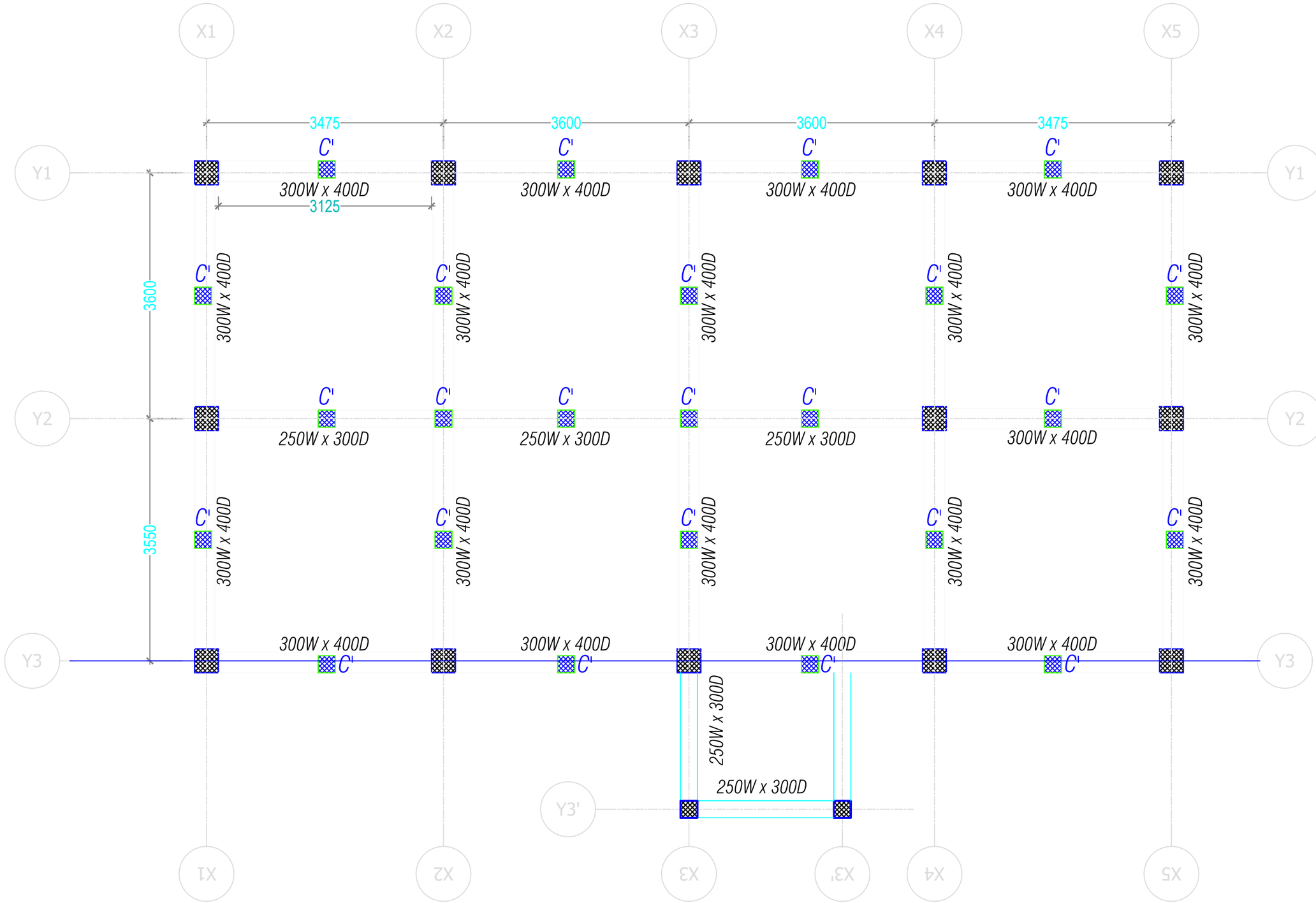

ROOF FLOOR BEAM LAYOUT PLAN

Khorlochhu	STRUCTURAL DRAWING	NOTES	CHECKED	APPROVED	DATE	DRAWING NO.
	PROJECT TITLE	1. ALL DIMENSIONS ARE IN MILLIMETER & ELEVATION IN METER UNLESS SPECIFIED OTHERWISE. 2. ALL DIMENSIONS MEASURE UNFINISHED SURFACES UNLESS SPECIFIED OTHERWISE. 3. DIMENSIONS ARE TO BE READ AND NOT SCALED OFF. 4. ANY DISCREPANCIES IN THE DRAWING ARE TO BE BROUGHT TO THE IMMEDIATE NOTICE OF THE SUPERVISION TEAM.				STR_13
	Construction of Doksum Primary School				MARCH, 2026	SCALE
	DRAWING TITLE					NTS
	ROOF_BEAM_LAYOUT_PLAN					

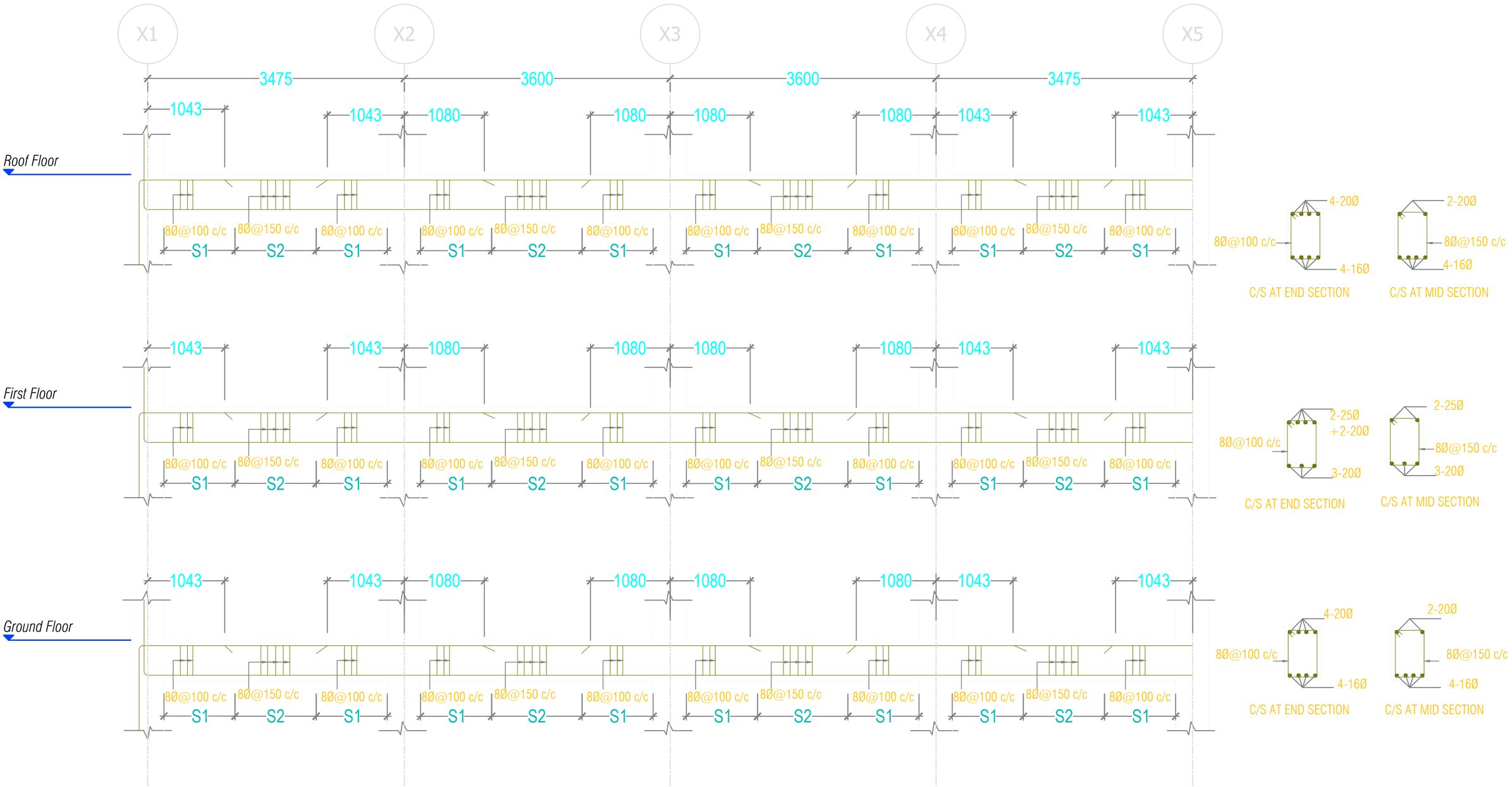

L-Section Along Frame Y1 and Y2

Khorlochhu

STRUCTURAL DRAWING		NOTES	CHECKED	APPROVED	DATE	DRAWING NO.
PROJECT TITLE	DRAWING TITLE	1. ALL DIMENSIONS ARE IN MILLIMETER & ELEVATION IN METER UNLESS SPECIFIED OTHERWISE. 2. ALL DIMENSIONS MEASURE UNFINISHED SURFACES UNLESS SPECIFIED OTHERWISE. 3. DIMENSIONS ARE TO BE READ AND NOT SCALED OFF. 4. ANY DISCREPANCIES IN THE DRAWING ARE TO BE BROUGHT TO THE IMMEDIATE NOTICE OF THE SUPERVISION TEAM.				STR_14
Construction of Doksum Primary School	BEAM_SECTION_ALONG_FRAME_Y1_&_Y2				MARCH, 2026	SCALE NTS

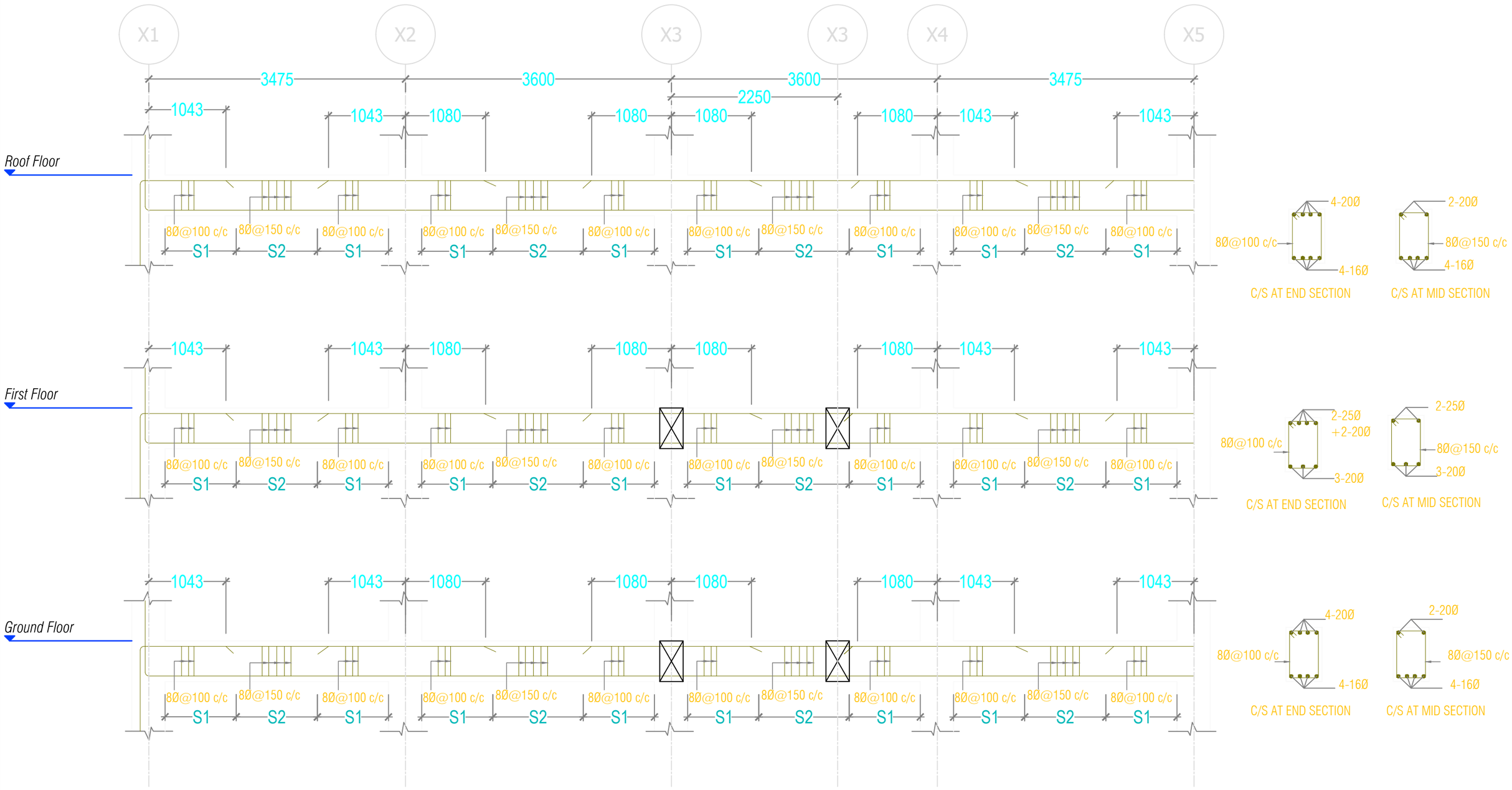

L-Section Along Frame Y3

Khorlochhu	STRUCTURAL DRAWING	NOTES	CHECKED	APPROVED	DATE	DRAWING NO.
	PROJECT TITLE: Construction of Doksum Primary School	1. ALL DIMENSIONS ARE IN MILLIMETER & ELEVATION IN METER UNLESS SPECIFIED OTHERWISE. 2. ALL DIMENSIONS MEASURE UNFINISHED SURFACES UNLESS SPECIFIED OTHERWISE. 3. DIMENSIONS ARE TO BE READ AND NOT SCALED OFF. 4. ANY DISCREPANCIES IN THE DRAWING ARE TO BE BROUGHT TO THE IMMEDIATE NOTICE OF THE SUPERVISION TEAM.				STR_15
	DRAWING TITLE: BEAM_SECTION_ALONG_Y3				MARCH, 2026	SCALE: NTS

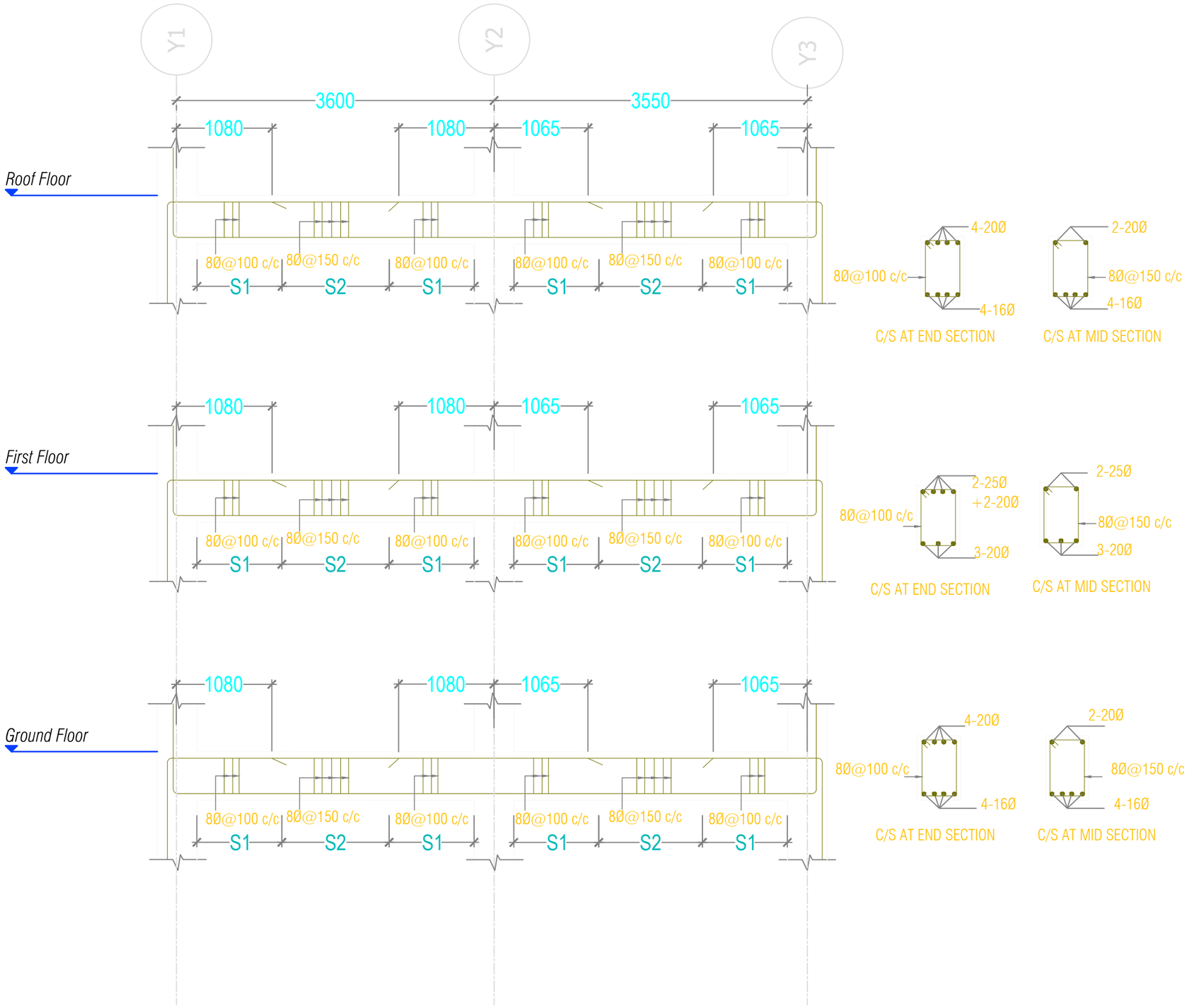

L-Section Along Frame X1, X2, X4 & X5

Khorlochhu

STRUCTURAL DRAWING

PROJECT TITLE	DRAWING TITLE
Construction of Doksum Primary School	BEAM_SECTION_ALONG_FRAME_X1,X2,X4_&_X5

NOTES

1. ALL DIMENSIONS ARE IN MILLIMETER & ELEVATION IN METER UNLESS SPECIFIED OTHERWISE.
2. ALL DIMENSIONS MEASURE UNFINISHED SURFACES UNLESS SPECIFIED OTHERWISE.
3. DIMENSIONS ARE TO BE READ AND NOT SCALED OFF.
4. ANY DISCREPANCIES IN THE DRAWING ARE TO BE BROUGHT TO THE IMMEDIATE NOTICE OF THE SUPERVISION TEAM.

CHECKED	APPROVED	DATE	DRAWING NO.
			STR_16
		MARCH, 2026	SCALE
			NTS

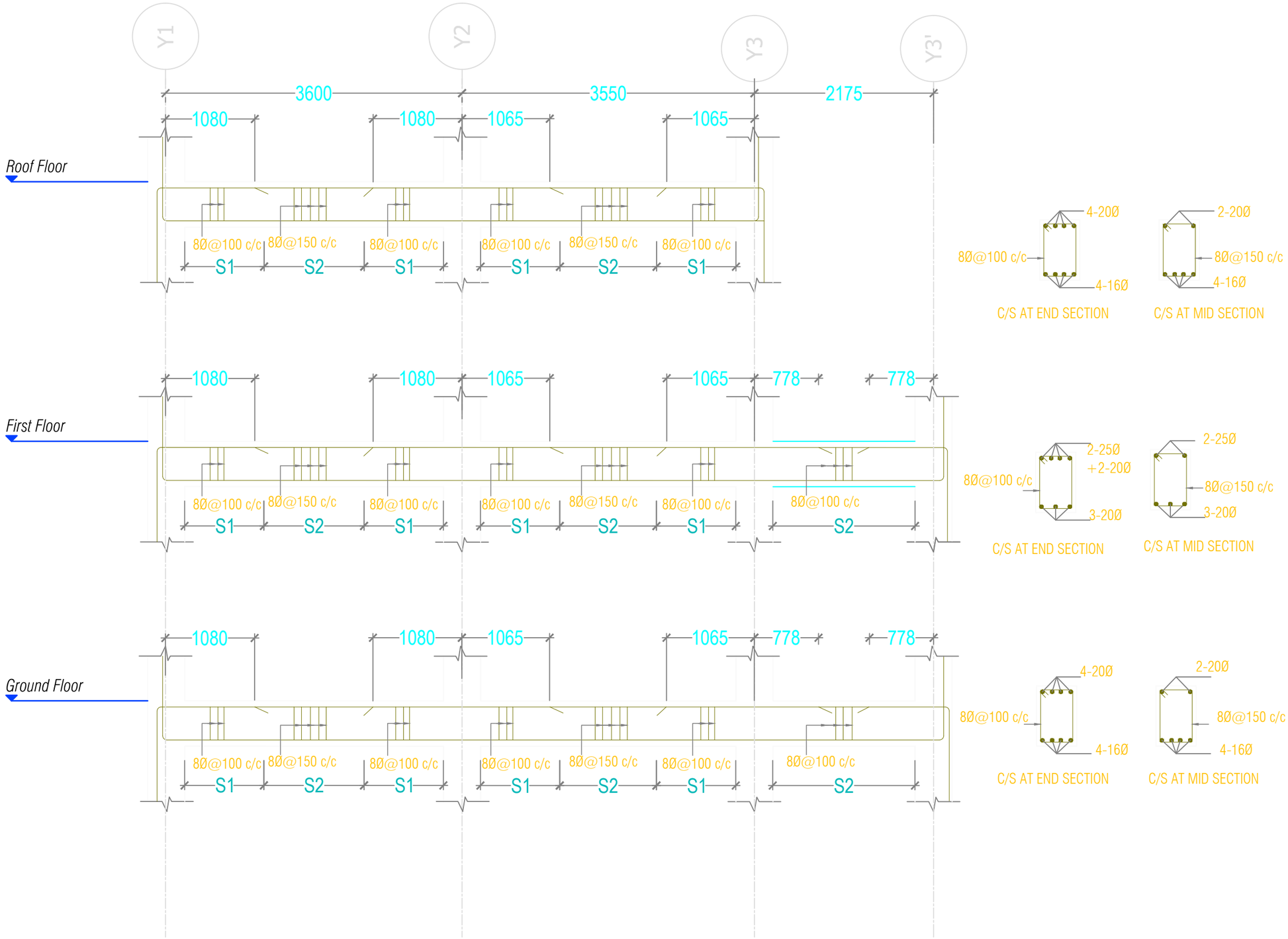

L-Section Along Frame X3

Khorlochhu

STRUCTURAL DRAWING

PROJECT TITLE	DRAWING TITLE
Construction of Doksum Primary School	BEAM_SECTION_ALONG_FRAME_X3

NOTES

1. ALL DIMENSIONS ARE IN MILLIMETER & ELEVATION IN METER UNLESS SPECIFIED OTHERWISE.
2. ALL DIMENSIONS MEASURE UNFINISHED SURFACES UNLESS SPECIFIED OTHERWISE.
3. DIMENSIONS ARE TO BE READ AND NOT SCALED OFF.
4. ANY DISCREPANCIES IN THE DRAWING ARE TO BE BROUGHT TO THE IMMEDIATE NOTICE OF THE SUPERVISION TEAM.

CHECKED	APPROVED	DATE	DRAWING NO.
			STR_17
		MARCH, 2026	SCALE
			NTS

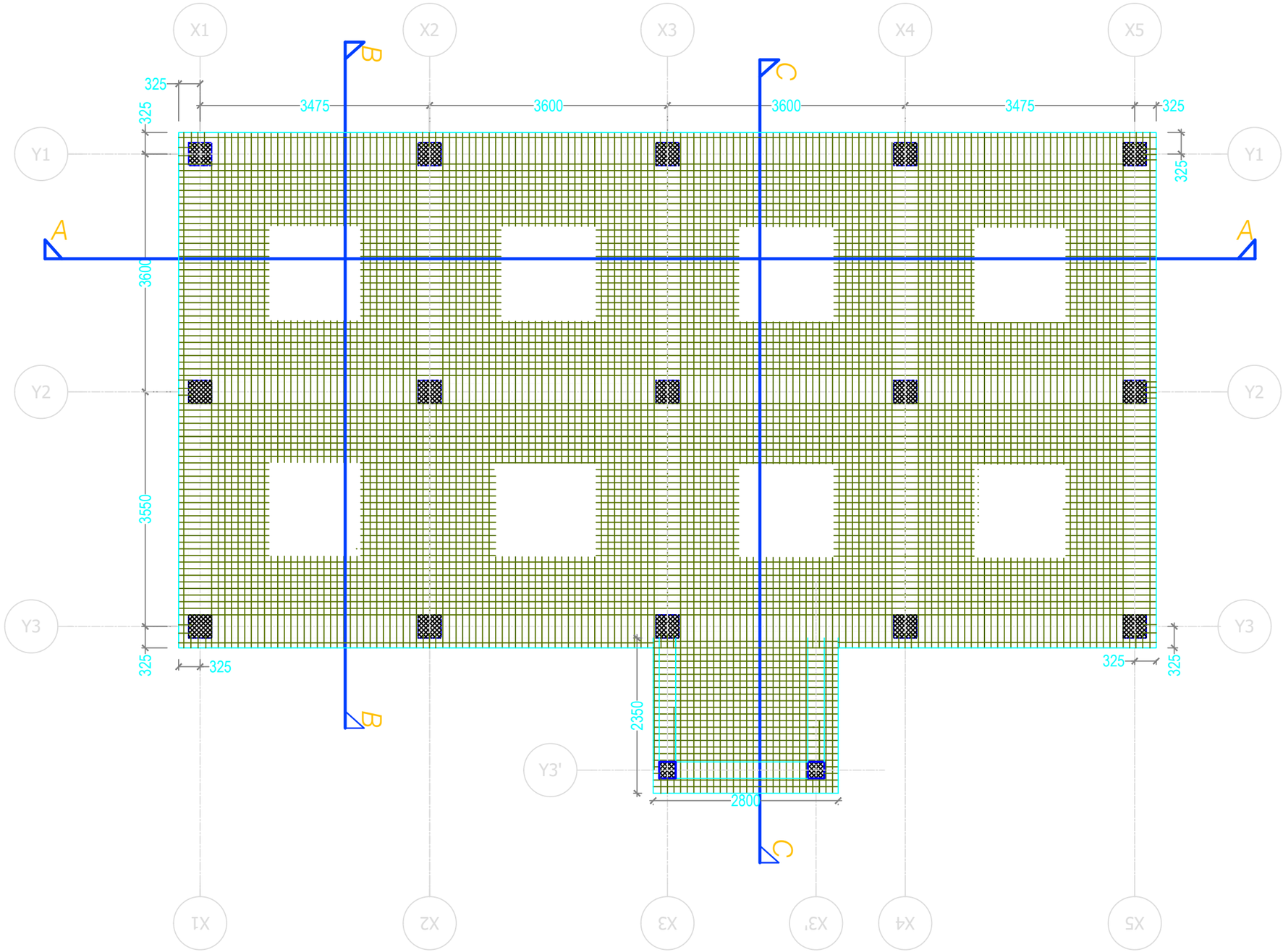

First Floor Slab Layout Plan - TOP Reinforcement

Note: Projection of Slab to be read along with Architectural Drawings

Slab thickness- 150mm

Reinforcement - 10Ø@150c/c both direction

Khorlochhu

STRUCTURAL DRAWING

PROJECT TITLE	DRAWING TITLE
Construction of Doksum Primary School	FIRST_FLOOR_SLAB_LAYOUT

NOTES

1. ALL DIMENSIONS ARE IN MILLIMETER & ELEVATION IN METER UNLESS SPECIFIED OTHERWISE.
2. ALL DIMENSIONS MEASURE UNFINISHED SURFACES UNLESS SPECIFIED OTHERWISE.
3. DIMENSIONS ARE TO BE READ AND NOT SCALED OFF.
4. ANY DISCREPANCIES IN THE DRAWING ARE TO BE BROUGHT TO THE IMMEDIATE NOTICE OF THE SUPERVISION TEAM.

CHECKED	APPROVED	DATE	DRAWING NO.
			STR_18
		MARCH, 2026	SCALE
			NTS

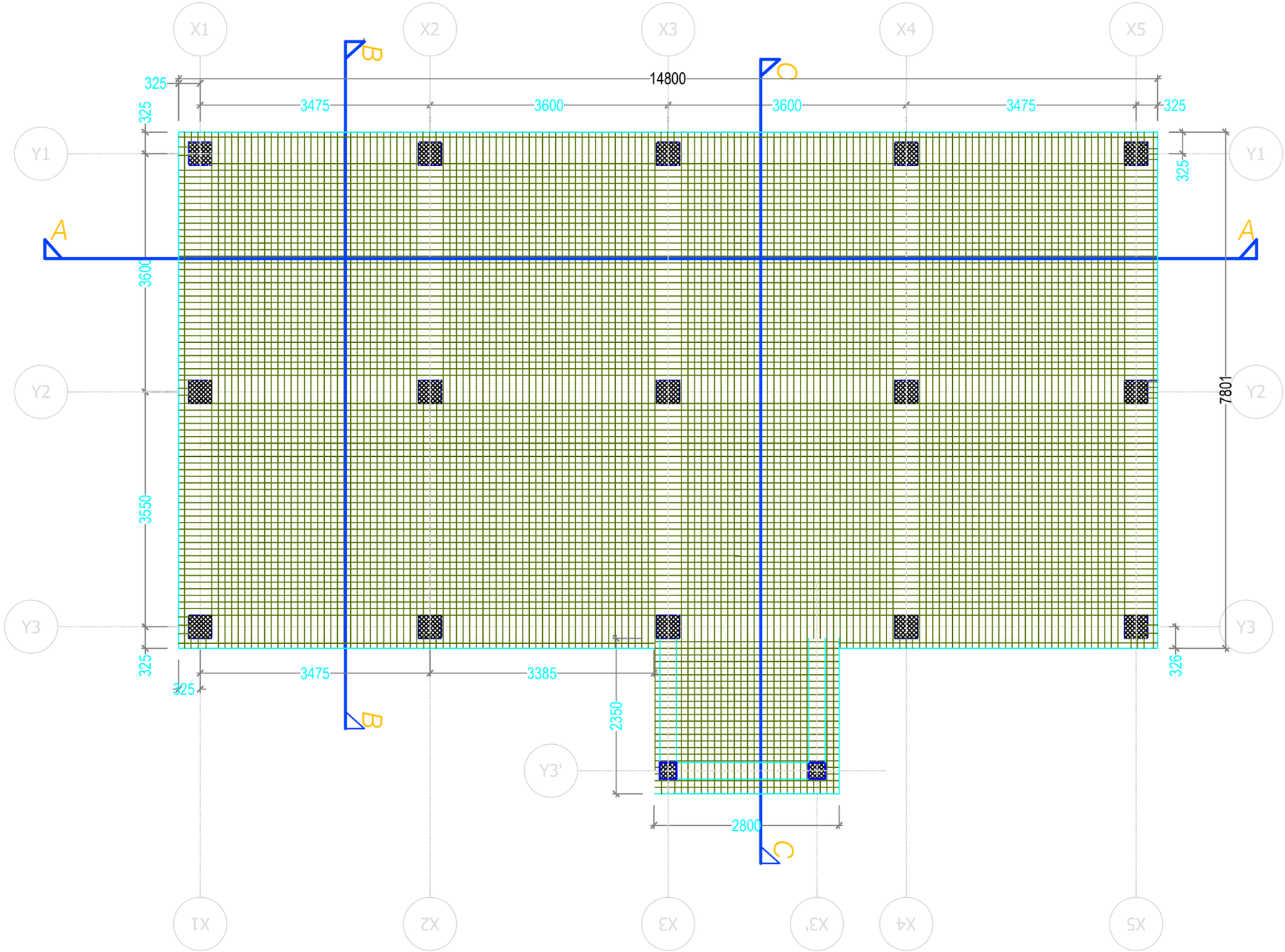

First Floor Slab Layout Plan - Bottom Reinforcement

Note: Projection of Slab to be read along with Architectural Drawings

Slab thickness- 150mm

Reinforcement - 10Ø@150c/c both direction

Khorlochhu	**STRUCTURAL DRAWING**	**NOTES**	**CHECKED**	**APPROVED**	**DATE**	**DRAWING NO.**
	PROJECT TITLE / **DRAWING TITLE**	1. ALL DIMENSIONS ARE IN MILLIMETER & ELEVATION IN METER UNLESS SPECIFIED OTHERWISE. 2. ALL DIMENSIONS MEASURE UNFINISHED SURFACES UNLESS SPECIFIED OTHERWISE. 3. DIMENSIONS ARE TO BE READ AND NOT SCALED OFF. 4. ANY DISCREPANCIES IN THE DRAWING ARE TO BE BROUGHT TO THE IMMEDIATE NOTICE OF THE SUPERVISION TEAM.				**STR_19**
	Construction of Doksum Primary School / **FIRST_FLOOR_SLAB_LAYOUT**				MARCH, 2026	**SCALE** NTS

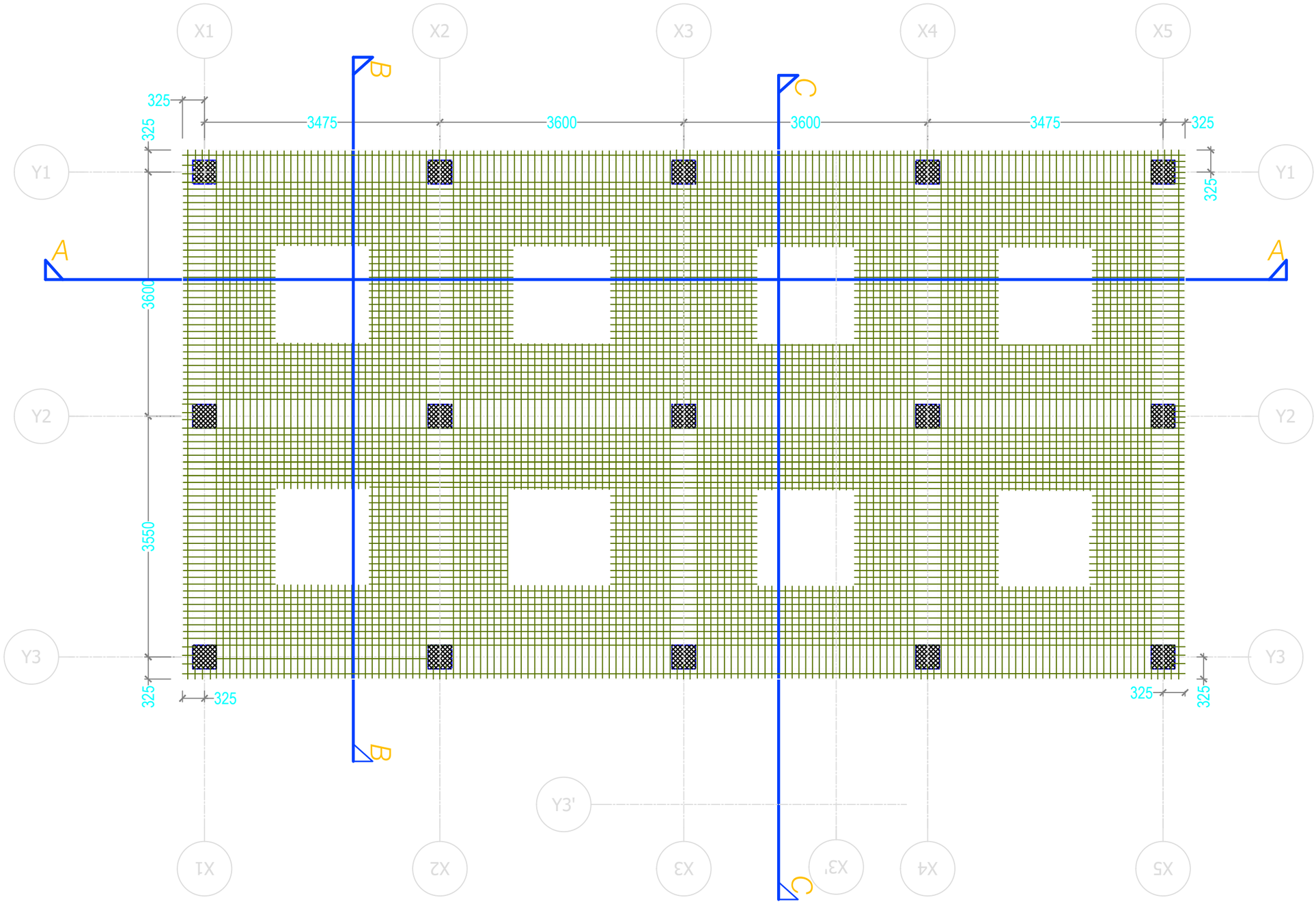

Roof Floor Slab Layout Plan - TOP Reinforcement

Note: Projection of Slab to be read along with Architectural Drawings

Slab thickness- 150mm

Reinforcement - 10Ø@150c/c both direction

Khorlochhu	STRUCTURAL DRAWING	NOTES	CHECKED	APPROVED	DATE	DRAWING NO.
	PROJECT TITLE	DRAWING TITLE				STR_20
	Construction of Doksum Primary School	ROOF_SLAB_LAYOUT			MARCH, 2026	SCALE
						NTS

1. ALL DIMENSIONS ARE IN MILLIMETER & ELEVATION IN METER UNLESS SPECIFIED OTHERWISE.
2. ALL DIMENSIONS MEASURE UNFINISHED SURFACES UNLESS SPECIFIED OTHERWISE.
3. DIMENSIONS ARE TO BE READ AND NOT SCALED OFF.
4. ANY DISCREPANCIES IN THE DRAWING ARE TO BE BROUGHT TO THE IMMEDIATE NOTICE OF THE SUPERVISION TEAM.

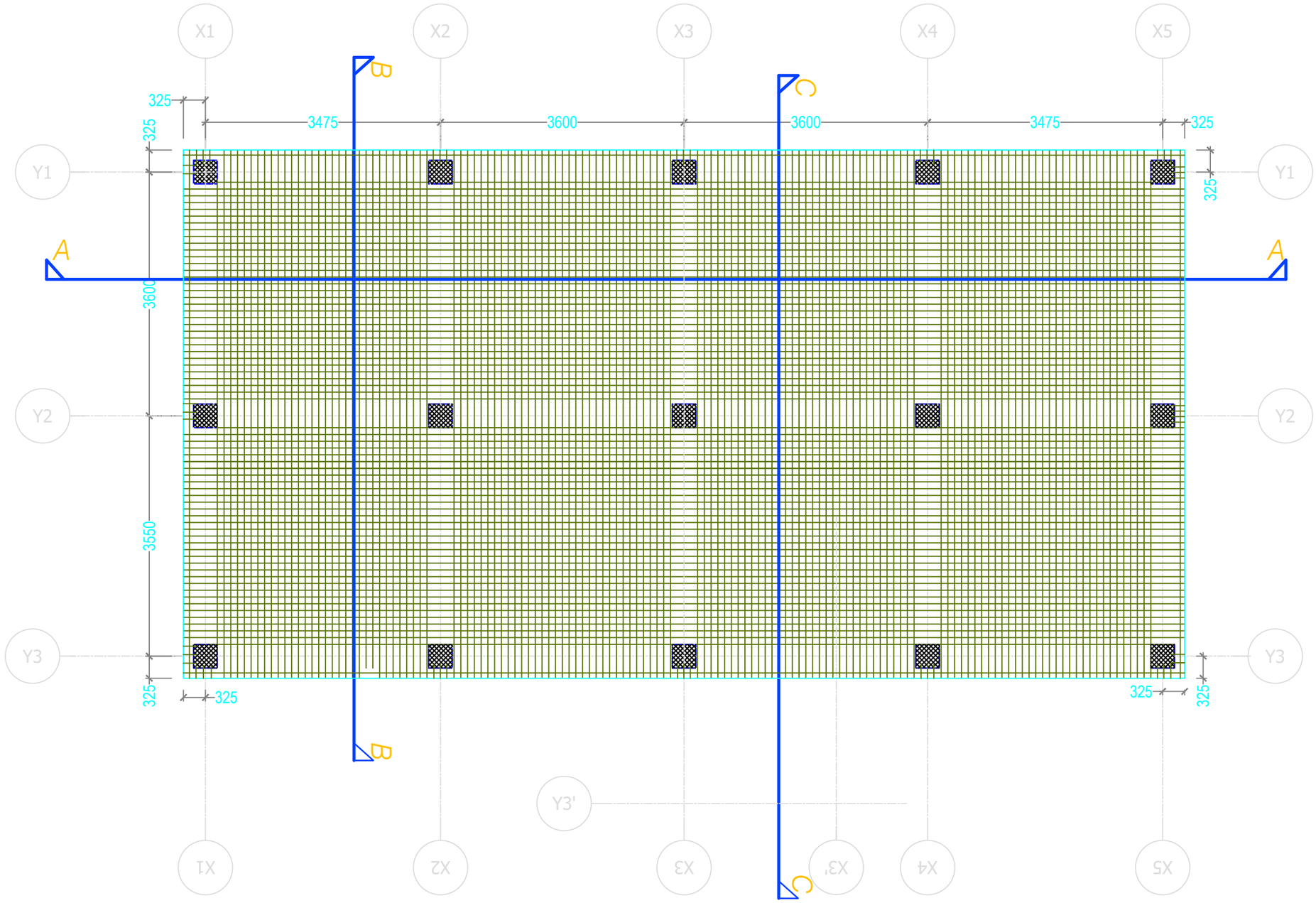

Roof Floor Slab Layout Plan - Bottom Reinforcement

Note: Projection of Slab to be read along with Architectural Drawings

Slab thickness- 150mm
Reinforcement - 10Ø@150c/c both direction

Khorlochhu

STRUCTURAL DRAWING

PROJECT TITLE	DRAWING TITLE
Construction of Doksum Primary School	ROOF_SLAB_LAYOUT

NOTES

1. ALL DIMENSIONS ARE IN MILLIMETER & ELEVATION IN METER UNLESS SPECIFIED OTHERWISE.
2. ALL DIMENSIONS MEASURE UNFINISHED SURFACES UNLESS SPECIFIED OTHERWISE.
3. DIMENSIONS ARE TO BE READ AND NOT SCALED OFF.
4. ANY DISCREPANCIES IN THE DRAWING ARE TO BE BROUGHT TO THE IMMEDIATE NOTICE OF THE SUPERVISION TEAM.

CHECKED	APPROVED	DATE	DRAWING NO.
			STR_21
		MARCH, 2026	SCALE
			NTS

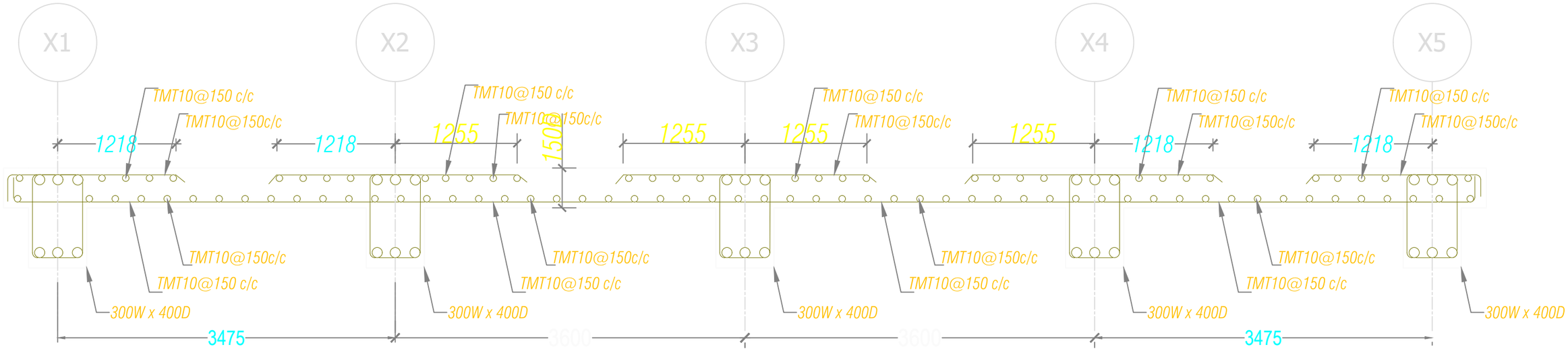

FIRST SLAB DETAILS AT SECTION A-A
(NOTE: 150MM THICKNESS OF SLAB)

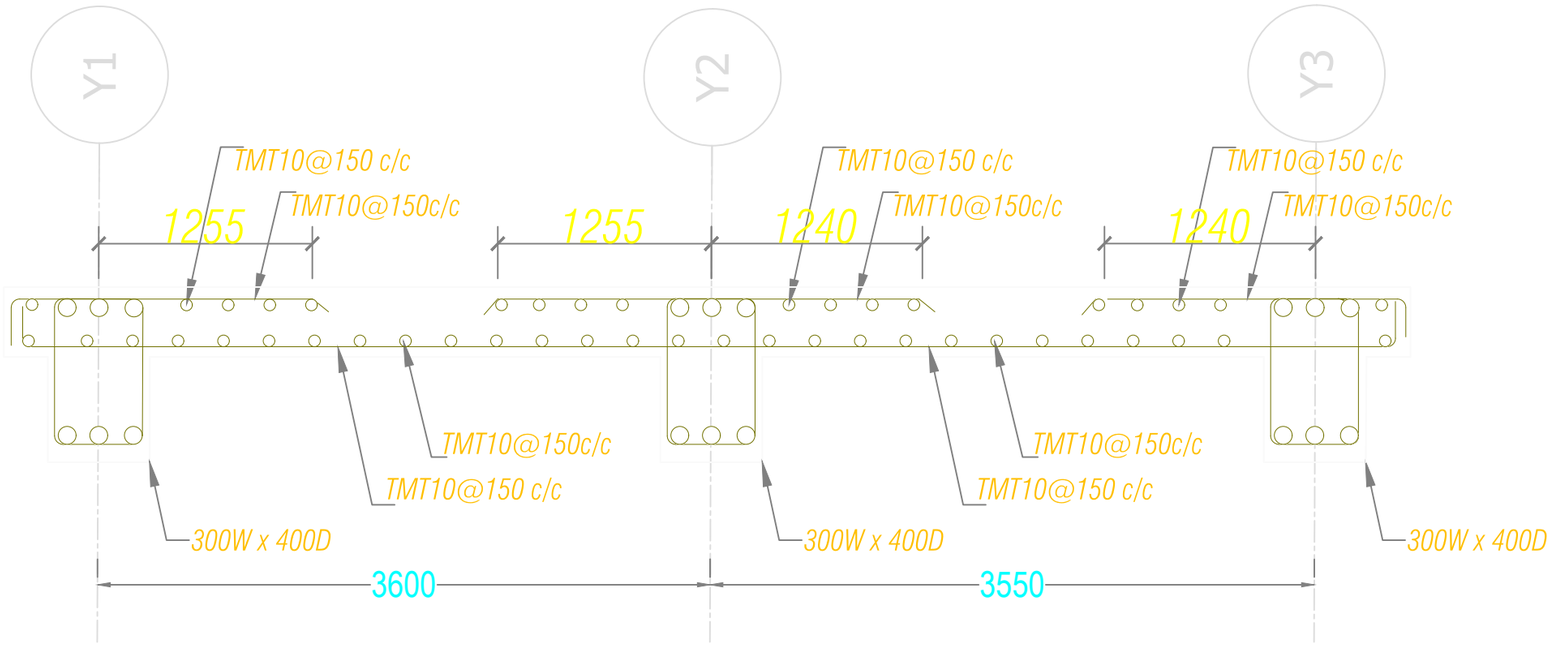

FIRST SLAB DETAILS AT SECTION B-B
(NOTE: 150MM THICKNESS OF SLAB)

Khorlochhu

STRUCTURAL DRAWING

PROJECT TITLE	DRAWING TITLE
Construction of Doksum Primary School	SLAB_SECTION_A-A_&_SECTION_B-B

NOTES

1. ALL DIMENSIONS ARE IN MILLIMETER & ELEVATION IN METER UNLESS SPECIFIED OTHERWISE.
2. ALL DIMENSIONS MEASURE UNFINISHED SURFACES UNLESS SPECIFIED OTHERWISE.
3. DIMENSIONS ARE TO BE READ AND NOT SCALED OFF.
4. ANY DISCREPANCIES IN THE DRAWING ARE TO BE BROUGHT TO THE IMMEDIATE NOTICE OF THE SUPERVISION TEAM.

CHECKED	APPROVED	DATE	DRAWING NO.
			STR_22
		MARCH, 2026	SCALE
			NTS

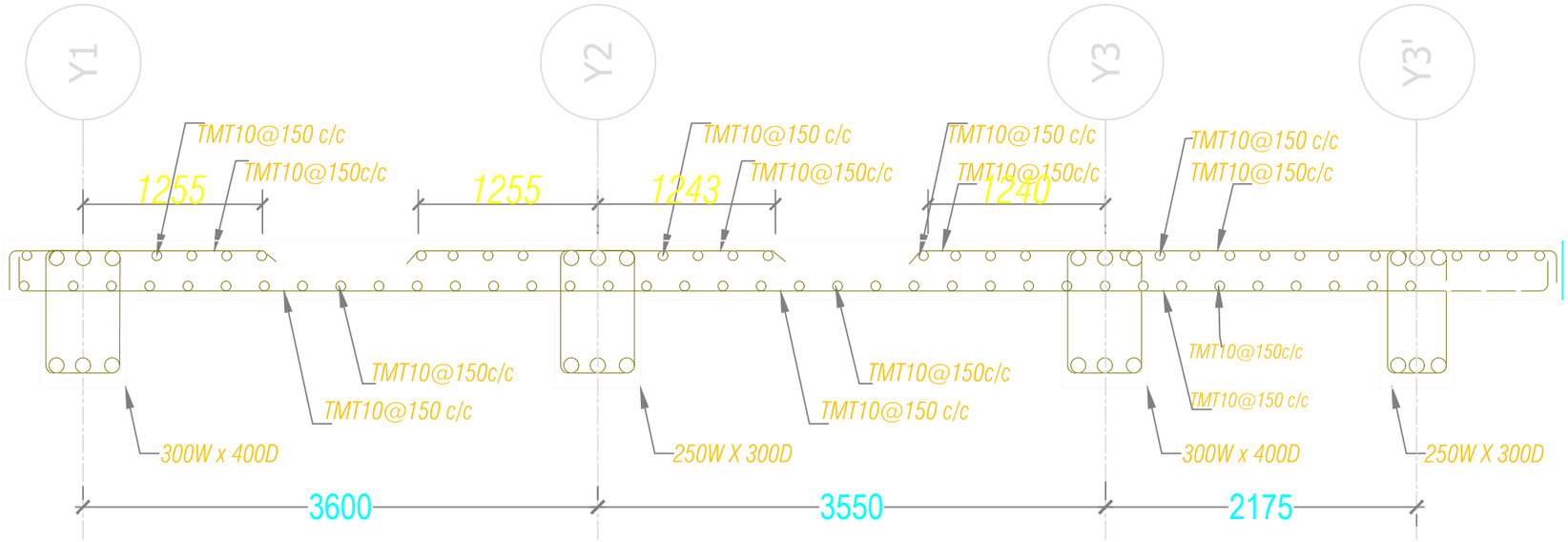

FIRST SLAB DETAILS AT SECTION C-C
(NOTE: 150MM THICKNESS OF SLAB)

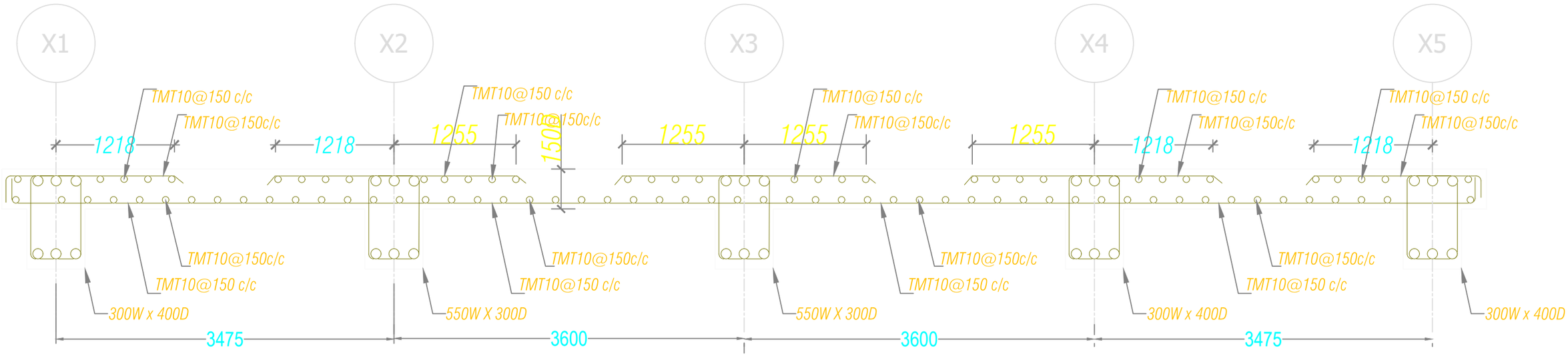

ROOF SLAB DETAILS AT SECTION A-A
(NOTE: 150MM THICKNESS OF SLAB)

Khorlochhu

STRUCTURAL DRAWING

PROJECT TITLE	DRAWING TITLE
Construction of Doksum Primary School	SLAB_SECTION

NOTES

1. ALL DIMENSIONS ARE IN MILLIMETER & ELEVATION IN METER UNLESS SPECIFIED OTHERWISE.
2. ALL DIMENSIONS MEASURE UNFINISHED SURFACES UNLESS SPECIFIED OTHERWISE.
3. DIMENSIONS ARE TO BE READ AND NOT SCALED OFF.
4. ANY DISCREPANCIES IN THE DRAWING ARE TO BE BROUGHT TO THE IMMEDIATE NOTICE OF THE SUPERVISION TEAM.

CHECKED	APPROVED	DATE	DRAWING NO.
			STR_23
		MARCH, 2026	SCALE
			NTS

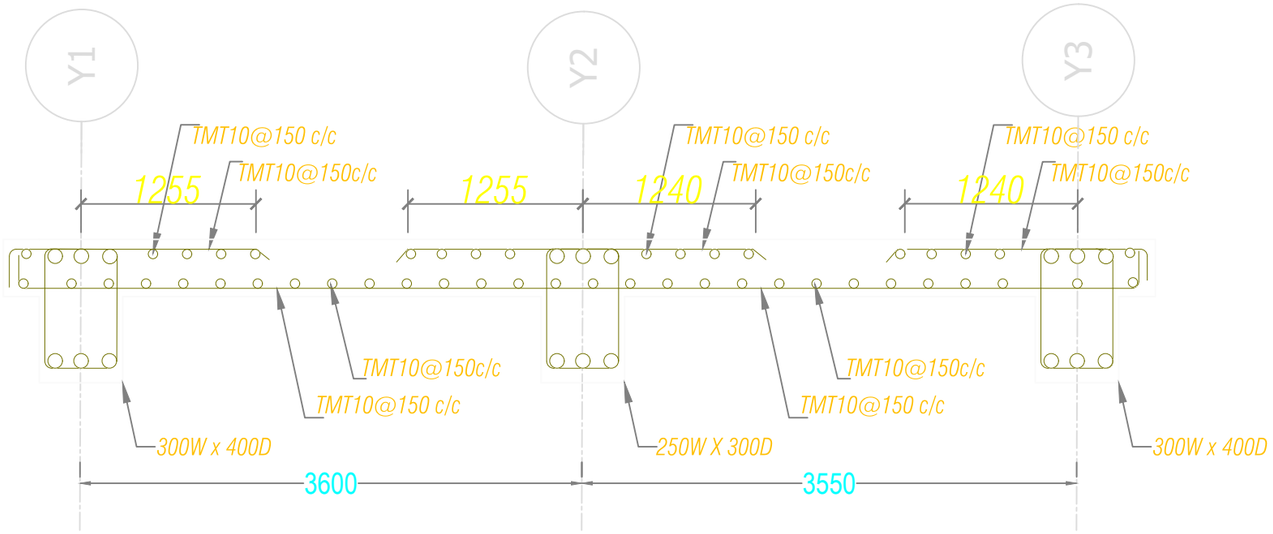

ROOF SLAB DETAILS AT SECTION B-B
(NOTE: 150MM THICKNESS OF SLAB)

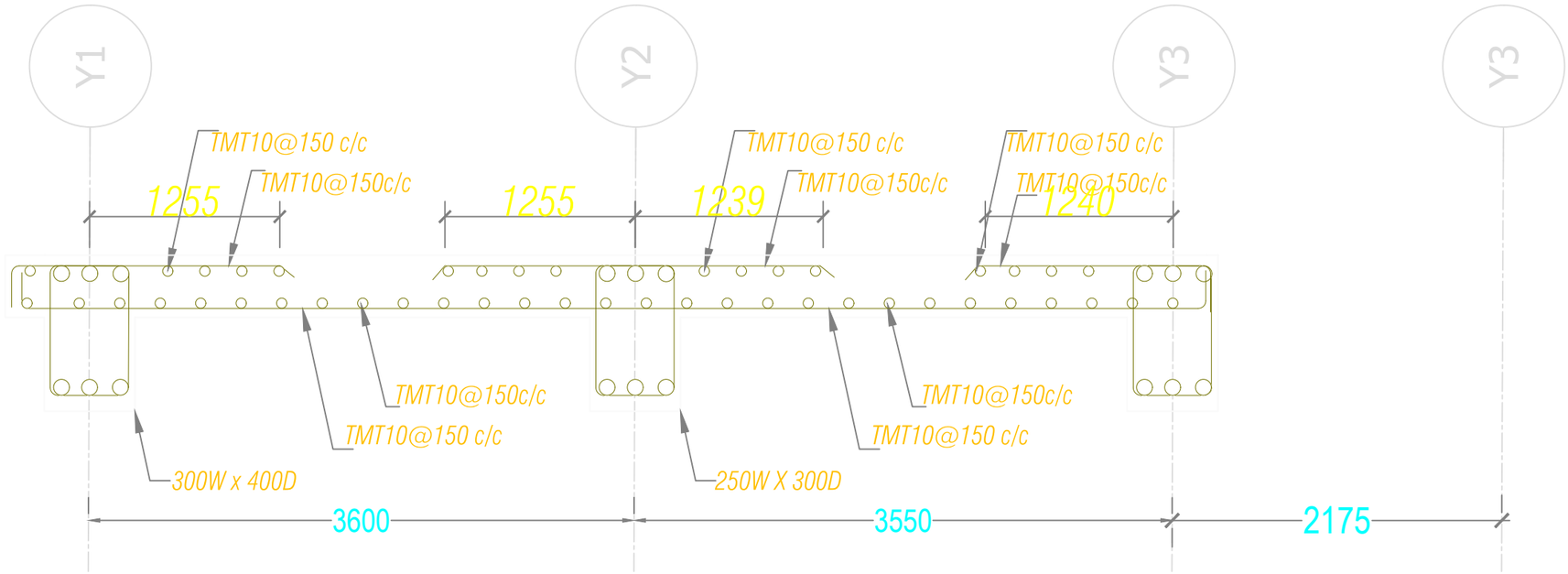

ROOF SLAB DETAILS AT SECTION C-C
(NOTE: 150MM THICKNESS OF SLAB)

Khorlochhu	**STRUCTURAL DRAWING**	**NOTES**	**CHECKED**	**APPROVED**	**DATE**	**DRAWING NO.**
	PROJECT TITLE / **DRAWING TITLE**	1. ALL DIMENSIONS ARE IN MILLIMETER & ELEVATION IN METER UNLESS SPECIFIED OTHERWISE. 2. ALL DIMENSIONS MEASURE UNFINISHED SURFACES UNLESS SPECIFIED OTHERWISE. 3. DIMENSIONS ARE TO BE READ AND NOT SCALED OFF. 4. ANY DISCREPANCIES IN THE DRAWING ARE TO BE BROUGHT TO THE IMMEDIATE NOTICE OF THE SUPERVISION TEAM.				**STR_24**
	Construction of Doksum Primary School / **SLAB_SECTION**				MARCH, 2026	**SCALE** NTS

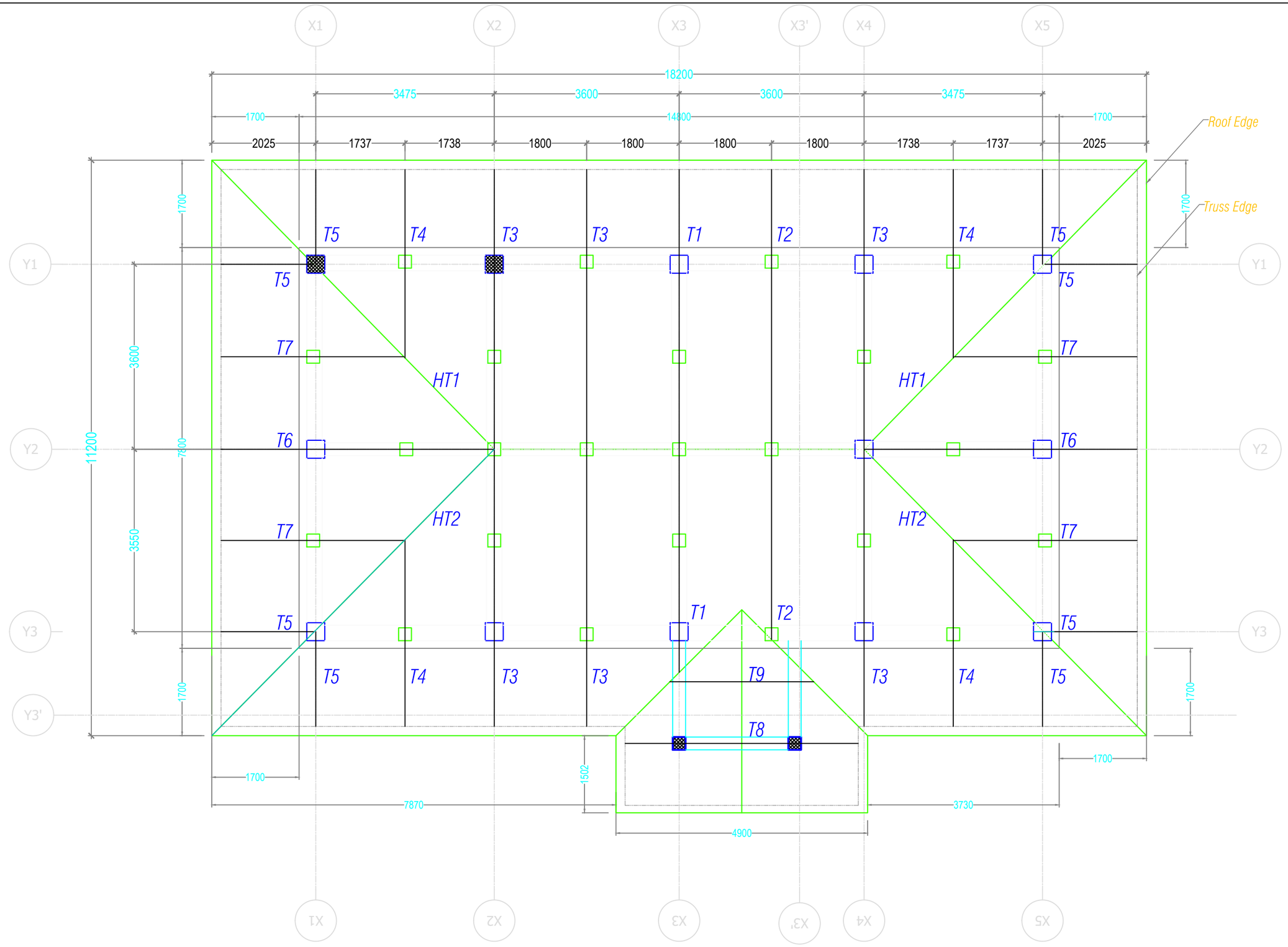

Khorlochhu

STRUCTURAL DRAWING

PROJECT TITLE	DRAWING TITLE
Construction of Doksum Primary School	MAIN_ROOF_TRUSS_LAYOUT

NOTES

1. ALL DIMENSIONS ARE IN MILLIMETER & ELEVATION IN METER UNLESS SPECIFIED OTHERWISE.
2. ALL DIMENSIONS MEASURE UNFINISHED SURFACES UNLESS SPECIFIED OTHERWISE.
3. DIMENSIONS ARE TO BE READ AND NOT SCALED OFF.
4. ANY DISCREPANCIES IN THE DRAWING ARE TO BE BROUGHT TO THE IMMEDIATE NOTICE OF THE SUPERVISION TEAM.

CHECKED	APPROVED	DATE	DRAWING NO.
		MARCH, 2026	STR_25
			SCALE
			NTS

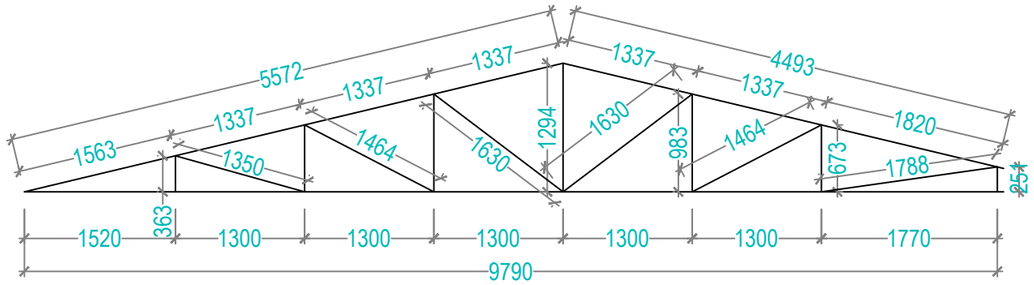

T1

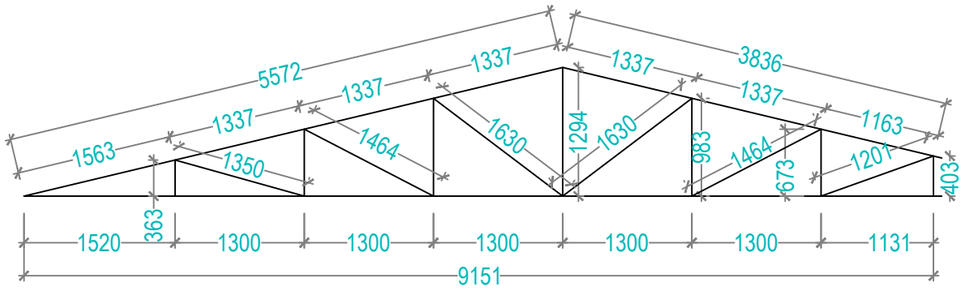

T2

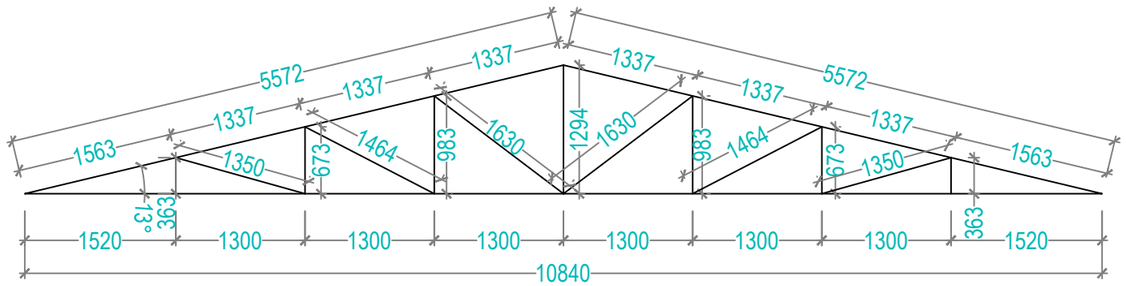

T3

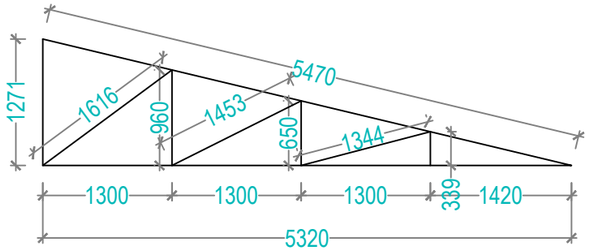

T6

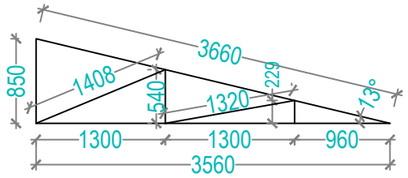

T7

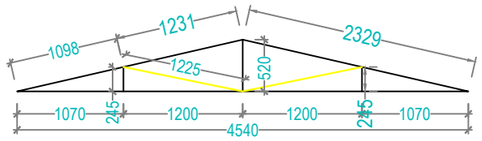

T8

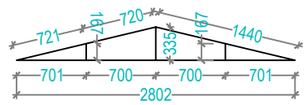

T9

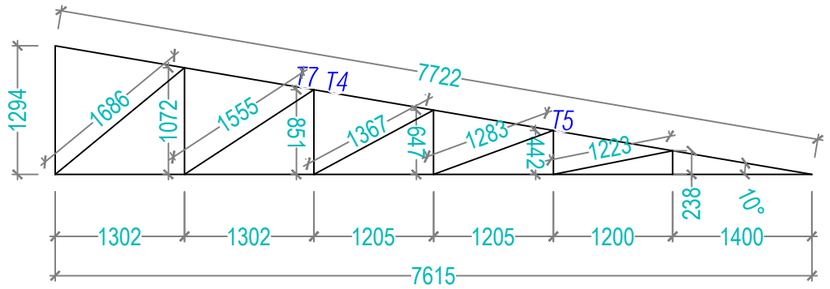

HT1

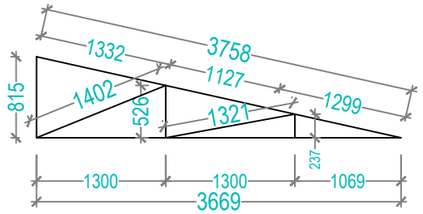

T4

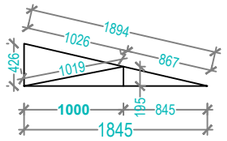

T5

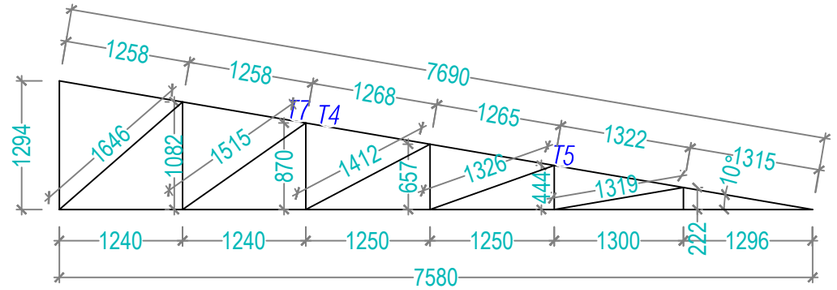

HT2

Khorlochhu

STRUCTURAL DRAWING

PROJECT TITLE	DRAWING TITLE
Construction of Doksum Primary School	TRUSS_DETAILS

NOTES

1. ALL DIMENSIONS ARE IN MILLIMETER & ELEVATION IN METER UNLESS SPECIFIED OTHERWISE.
2. ALL DIMENSIONS MEASURE UNFINISHED SURFACES UNLESS SPECIFIED OTHERWISE.
3. DIMENSIONS ARE TO BE READ AND NOT SCALED OFF.
4. ANY DISCREPANCIES IN THE DRAWING ARE TO BE BROUGHT TO THE IMMEDIATE NOTICE OF THE SUPERVISION TEAM.

CHECKED	APPROVED	DATE	DRAWING NO.
			STR_26
		MARCH, 2026	SCALE
			NTS

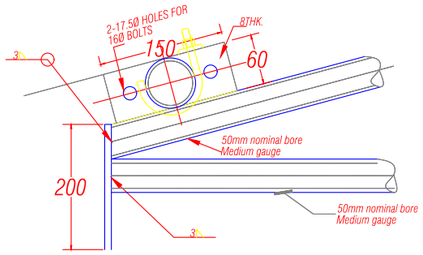

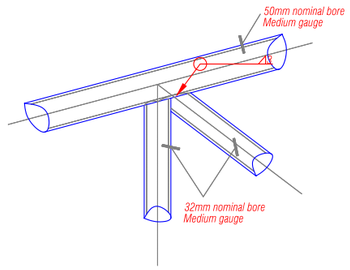

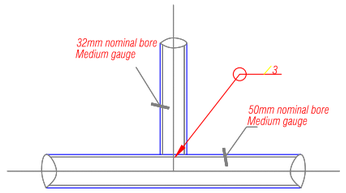

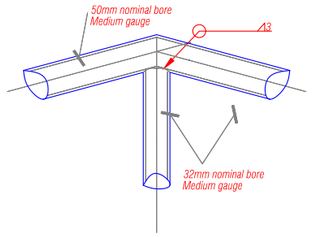

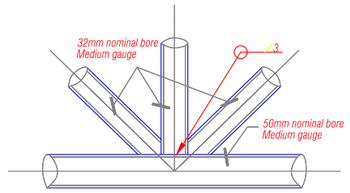

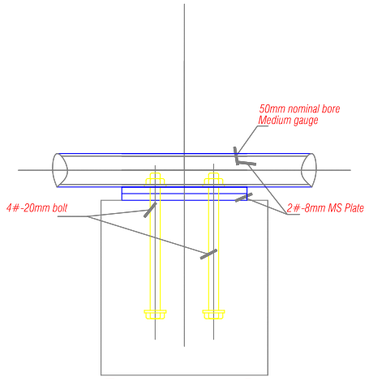

Truss support on Beam

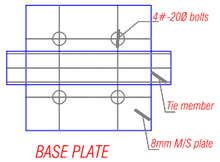

BASE PLATE

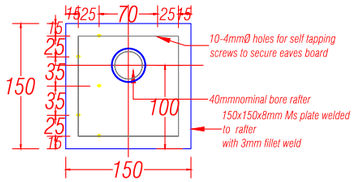

EAVES PLATE detail

NOTES:
Tubular steel of YST22 grade to be used.
All connections to be with fillet weld of 3mm size
Purlin 40mm nominal bore, medium gauge @1200c/c

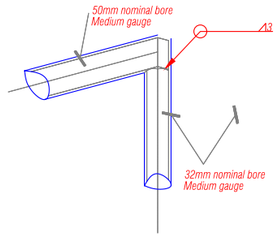

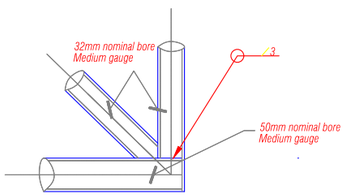

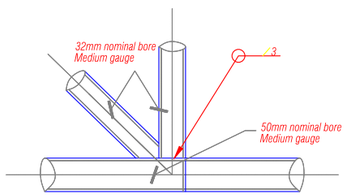

SCHEDULE OF TRUSS MEMBERS

Sl.No	Particulars	Size	Nominal Bore (NB)	Class
1.	Rafter & Bottom Chord	60.30 OM	50	Medium
2.	Vertical & Inclined Chord	48.30 OM	32	Medium
3.	Purlin	48.30 OM	40	Medium
PURLINS SHALL BE PROVIDED @ 1200 mm C/C				

Khorlochhu

STRUCTURAL DRAWING

PROJECT TITLE	DRAWING TITLE
Construction of Doksum Primary School	TRUSS_DETAILS

NOTES

1. ALL DIMENSIONS ARE IN MILLIMETER & ELEVATION IN METER UNLESS SPECIFIED OTHERWISE.
2. ALL DIMENSIONS MEASURE UNFINISHED SURFACES UNLESS SPECIFIED OTHERWISE.
3. DIMENSIONS ARE TO BE READ AND NOT SCALED OFF.
4. ANY DISCREPANCIES IN THE DRAWING ARE TO BE BROUGHT TO THE IMMEDIATE NOTICE OF THE SUPERVISION TEAM.

CHECKED	APPROVED	DATE	DRAWING NO.
			STR_27
		MARCH, 2026	SCALE
			NTS

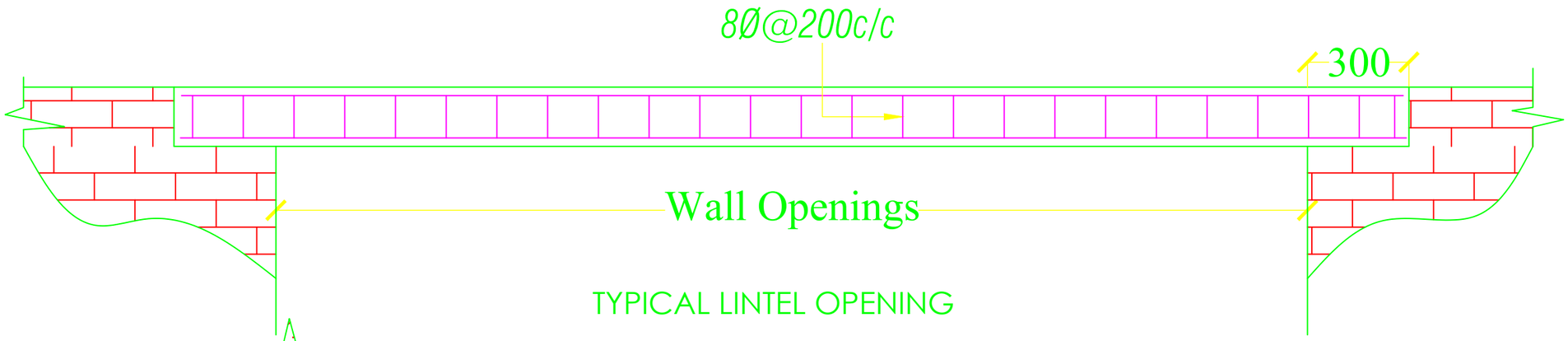

TYPICAL LINTEL OPENING

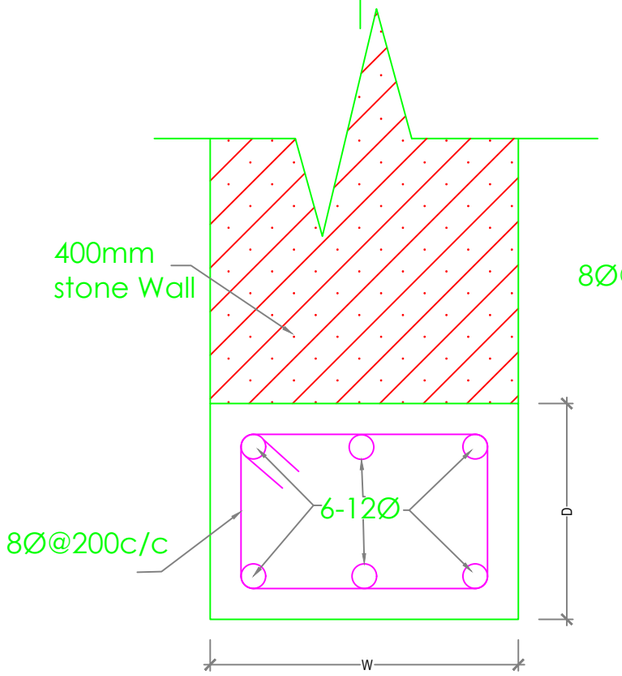

OPENING WITHIN
EXTERNAL WALL

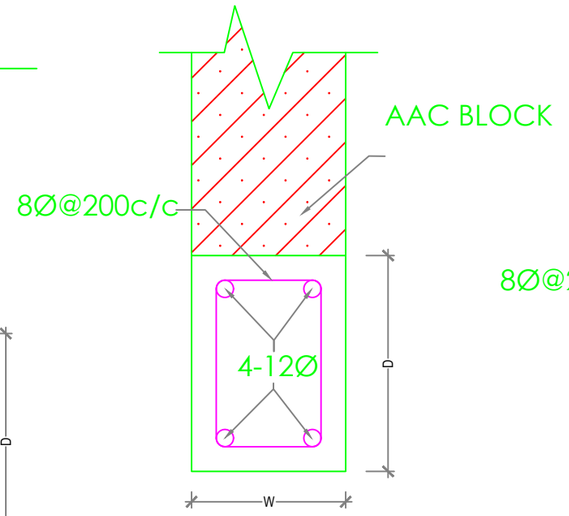

OPENING WITHIN
INTERNAL WALL

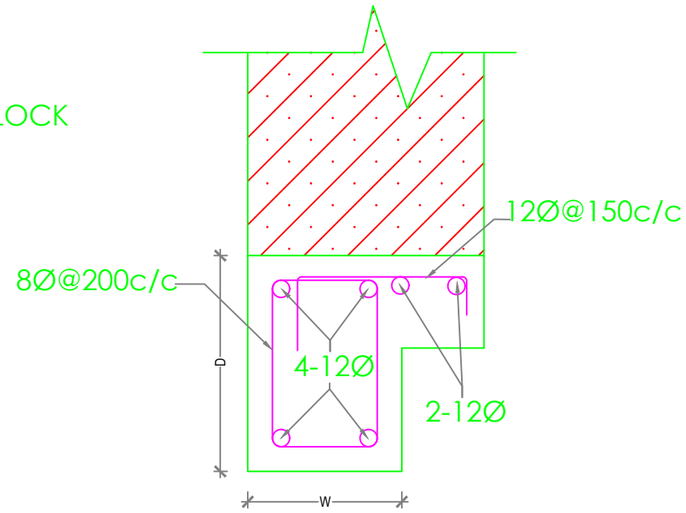

LINTEL WITH CORNICE

NOTE :

1. Depth (D) of Lintels is to be taken as shown in Architectural drawings, especially for main windows and should be taken as 150mm for all other Lintels.
2. Width (W) of Lintels is to be taken equal to the wall thickness.

Khorlochhu	STRUCTURAL DRAWING	NOTES	CHECKED	APPROVED	DATE	DRAWING NO.
	PROJECT TITLE / DRAWING TITLE	1. ALL DIMENSIONS ARE IN MILLIMETER & ELEVATION IN METER UNLESS SPECIFIED OTHERWISE. 2. ALL DIMENSIONS MEASURE UNFINISHED SURFACES UNLESS SPECIFIED OTHERWISE. 3. DIMENSIONS ARE TO BE READ AND NOT SCALED OFF. 4. ANY DISCREPANCIES IN THE DRAWING ARE TO BE BROUGHT TO THE IMMEDIATE NOTICE OF THE SUPERVISION TEAM.				STR_28
	Construction of Doksum Primary School / LINTEL_DETAILS				MARCH, 2026	SCALE: NTS

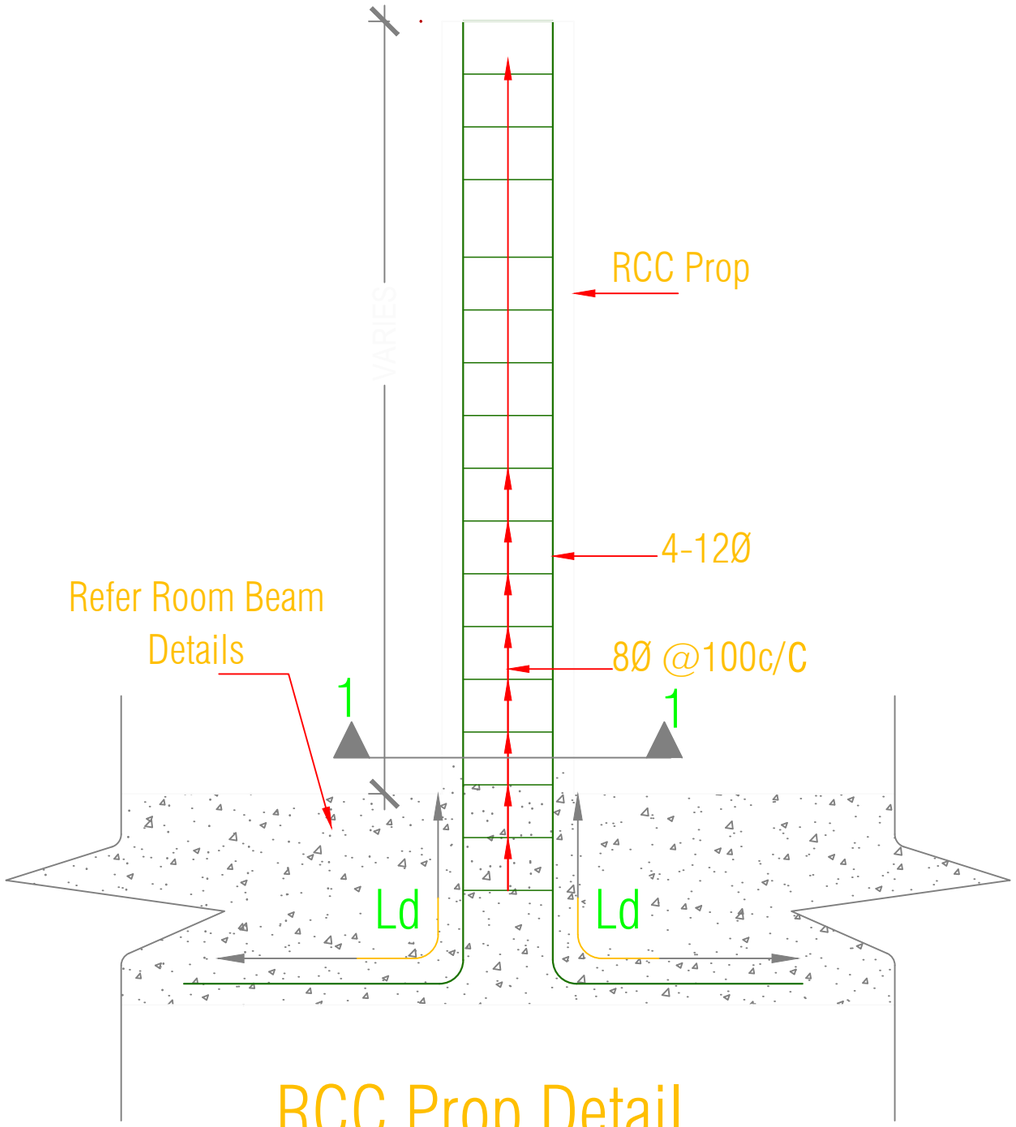

RCC Prop Detail

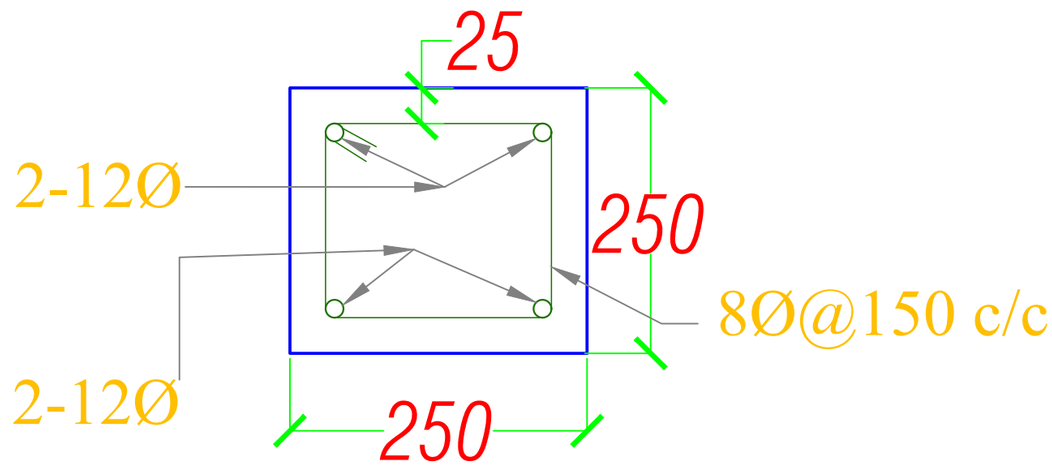

C' -Section 1-1

Khorlochhu	STRUCTURAL DRAWING	NOTES	CHECKED	APPROVED	DATE	DRAWING NO.
	PROJECT TITLE	DRAWING TITLE				STR_29
	Construction of Doksum Primary School	RCC_PROP			MARCH, 2026	SCALE
						NTS

1. ALL DIMENSIONS ARE IN MILLIMETER & ELEVATION IN METER UNLESS SPECIFIED OTHERWISE.
2. ALL DIMENSIONS MEASURE UNFINISHED SURFACES UNLESS SPECIFIED OTHERWISE.
3. DIMENSIONS ARE TO BE READ AND NOT SCALED OFF.
4. ANY DISCREPANCIES IN THE DRAWING ARE TO BE BROUGHT TO THE IMMEDIATE NOTICE OF THE SUPERVISION TEAM.

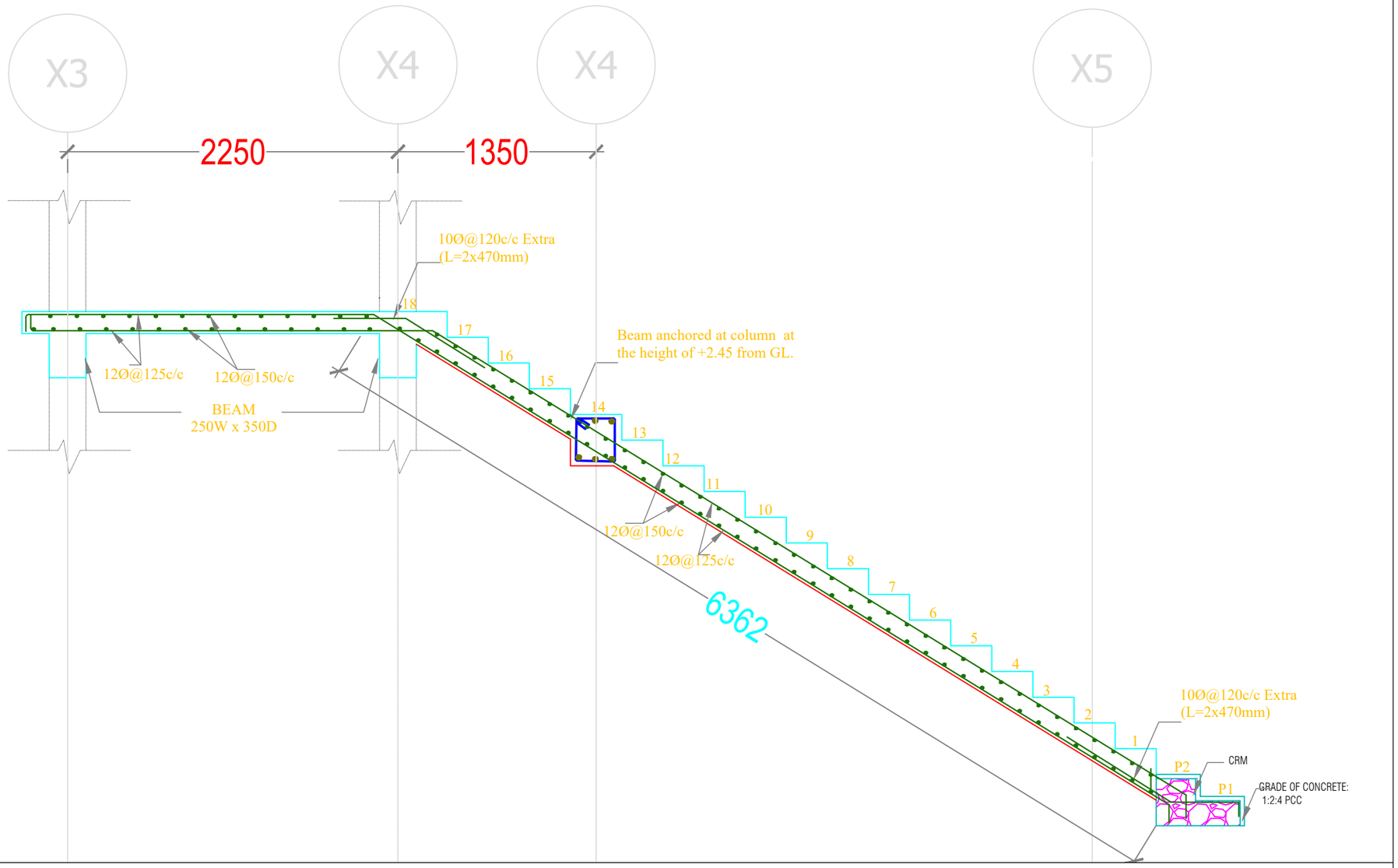

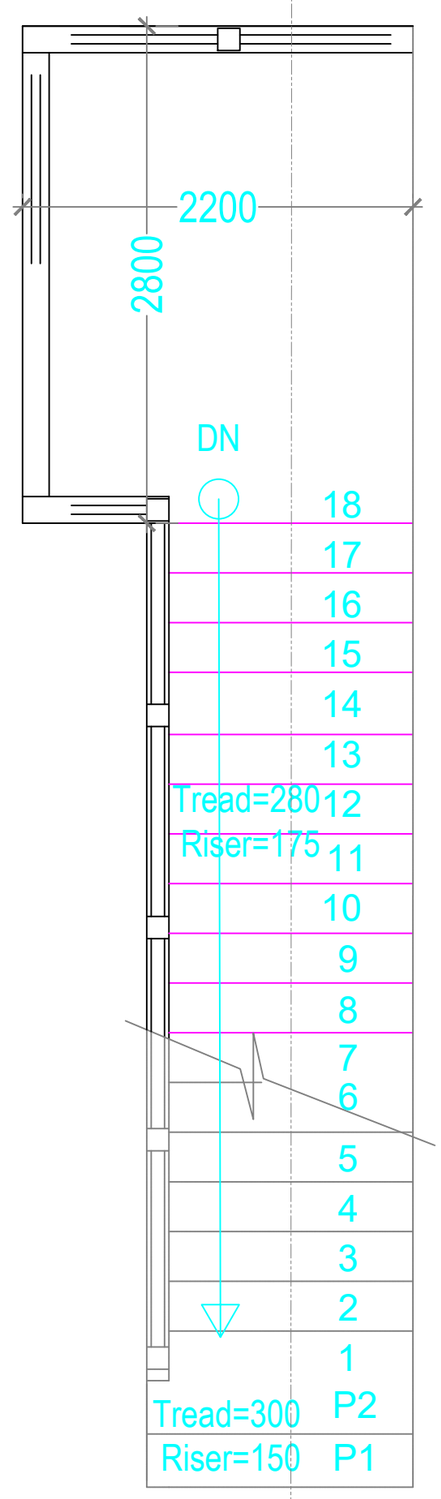

SECTION A-A

RISER 175MM
THREAD 280MM
WAIST/SLAB THICKNESS IS 150MM
P1 & P2 :
RISER 175MM
THREAD 300MM

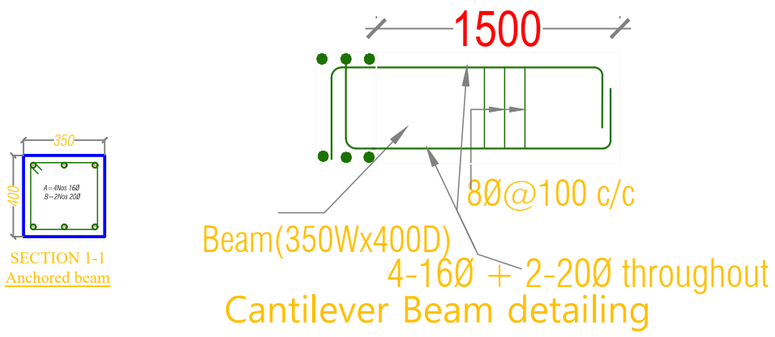

SECTION 1-1
Anchored beam

Khorlochhu

STRUCTURAL DRAWING

PROJECT TITLE	DRAWING TITLE
Construction of Doksum Primary School	STAIRCASE_DETAILS

NOTES

1. ALL DIMENSIONS ARE IN MILLIMETER & ELEVATION IN METER UNLESS SPECIFIED OTHERWISE.
2. ALL DIMENSIONS MEASURE UNFINISHED SURFACES UNLESS SPECIFIED OTHERWISE.
3. DIMENSIONS ARE TO BE READ AND NOT SCALED OFF.
4. ANY DISCREPANCIES IN THE DRAWING ARE TO BE BROUGHT TO THE IMMEDIATE NOTICE OF THE SUPERVISION TEAM.

CHECKED	APPROVED	DATE	DRAWING NO.
			STR_30
		MARCH, 2026	SCALE
			NTS

ELECTRICAL DRAWINGS

LABORATORY AND LIBRARY BLOCK

Owner - Khorlochhu Hydro Power Limited
Location - Doksum New Township, Trashiyangtse

Khorlochhu

SYMBOLS	Specifications
	60W,1200 sweep Ceiling fan
	6W Led Ceiling Light
	20W Led Tube Light
	6A/10A Modular switches.
	80W Exhaust fan
	5/6 Pin 16 Amps Switch/Socket Combined with indicator, 2000W
	Switch Board with 6A Socket(100W)
	Data Outlet Socket,RJ45 Modular type
	Telephone Outlet Socket, RJ11.
SDB	Sub Distribution Board,Double Door Type (SDB)
	Main Control Panel Board (MCPB)
JB	Telephone Terminal Cabinet (Junction Box)

Notes 1:

1. Light points wiring shall be with 1.5sq.mm PVC insulated copper conductor
2. Light supply circuit shall be done with 2.5sq.mm PVC insulated copper conductor
3. Power circuits shall be done with 4sq.mm PVC insulated copper conductor.
4. Different conduit lines shall be used for wiring with different phases.
5. Power points wiring below window shall not be dropped from above but supplied from below the window seal level.
6. Light switchboards shall be 1400mm from finished floor level to top.
7. Power sockets shall be 400mm from finished floor level to top except in Kitchen or toilets/bathrooms (wet area) where the height shall be 1400mm from floor to bottom and for air condition the height shall be 1750mm from finished floor level.
8. No power point shall be looped.
9. Main switch boards are to be flushed in the wall 230mm below the ceiling level.

Notes 2: (As recommended by service providers)

1. Telephone wiring shall be with 0.5Sq.mm PVC insulated and sheathed copper conductor.
2. Ducting to be at least 500mm away from electrical cable routes.
3. To provide bridging where telephone and electric cables cross.
4. Telephone terminal cabinet shall be 300x300x150mm with hole punches to receive 25mm dia conduit on all four sides and mounted at 2500mm above floor level.
5. Cable ducting shall be provided with 25mm dia PVC conduit and shall be common for drawing of TV cables.
6. RJ-11 sockets shall be provided for telephone points.
7. To supply direct lines for all the rooms where points are marked, from the terminal cabinet.
8. The incoming lines shall be brought and connected to incoming side of the terminal cabinet from where lines to all the rooms commence

Khorlochhu

ELECTRICAL DRAWING

PROJECT TITLE	DRAWING TITLE
Construction of Doksum Primary School	NOTE_&_SPECIFICATION

NOTES

1. ALL DIMENSIONS ARE IN MILLIMETER & ELEVATION IN METER UNLESS SPECIFIED OTHERWISE.
2. ALL DIMENSIONS MEASURE UNFINISHED SURFACES UNLESS SPECIFIED OTHERWISE.
3. DIMENSIONS ARE TO BE READ AND NOT SCALED OFF.
4. ANY DISCREPANCIES IN THE DRAWING ARE TO BE BROUGHT TO THE IMMEDIATE NOTICE OF THE SUPERVISION TEAM.

CHECKED	APPROVED	DATE	DRAWING NO.
			EL_1
		MARCH, 2026	SCALE
			NTS

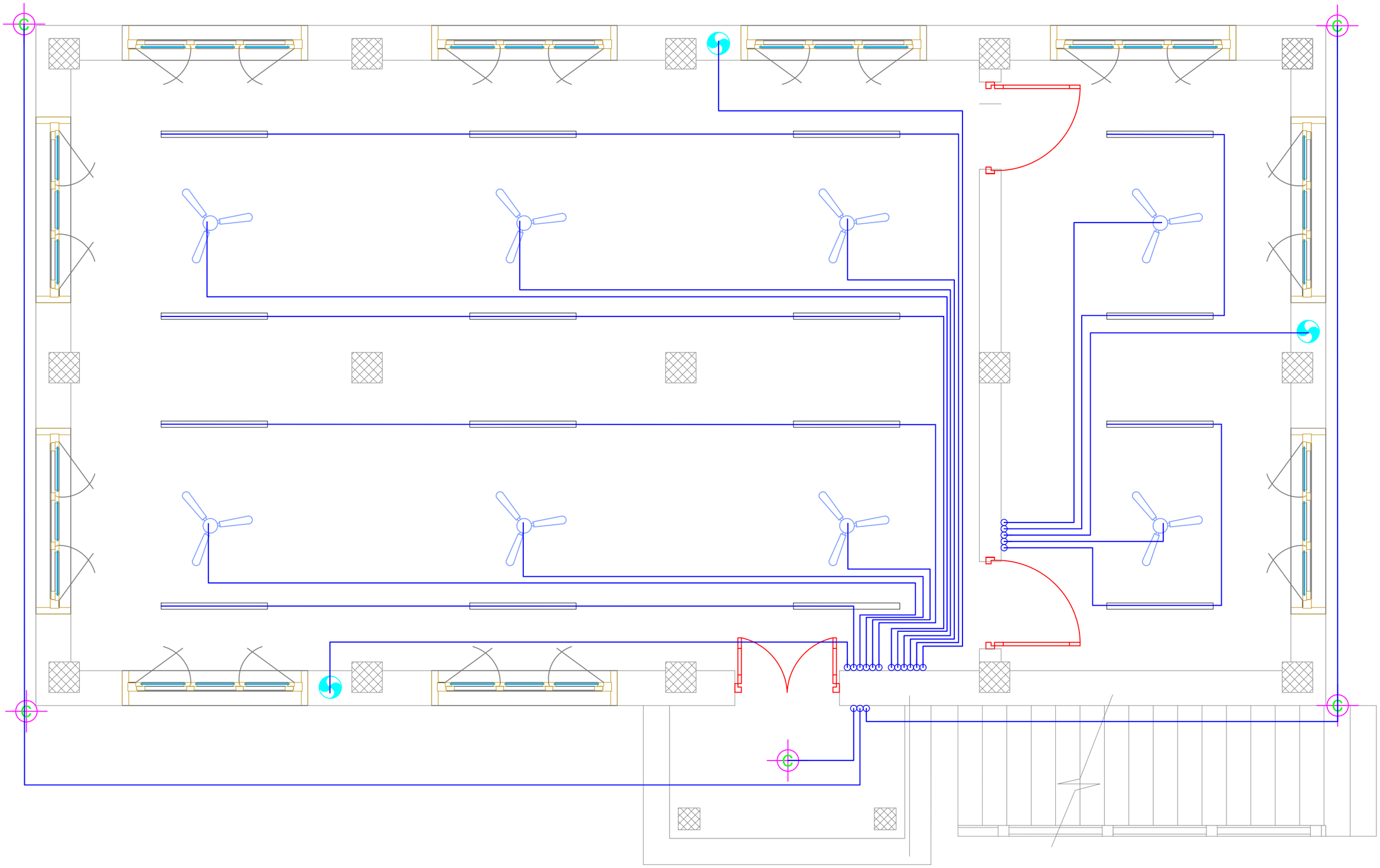

ELECTRICAL DRAWING

PROJECT TITLE	DRAWING TITLE
Construction of Doksum Primary School	FITTINGS_LAYOUT_GROUND_FLOOR

NOTES

1. ALL DIMENSIONS ARE IN MILLIMETER & ELEVATION IN METER UNLESS SPECIFIED OTHERWISE.
2. ALL DIMENSIONS MEASURE UNFINISHED SURFACES UNLESS SPECIFIED OTHERWISE.
3. DIMENSIONS ARE TO BE READ AND NOT SCALED OFF.
4. ANY DISCREPANCIES IN THE DRAWING ARE TO BE BROUGHT TO THE IMMEDIATE NOTICE OF THE SUPERVISION TEAM.

CHECKED	APPROVED	DATE	DRAWING NO.
			EL_2
		MARCH, 2026	SCALE
			NTS

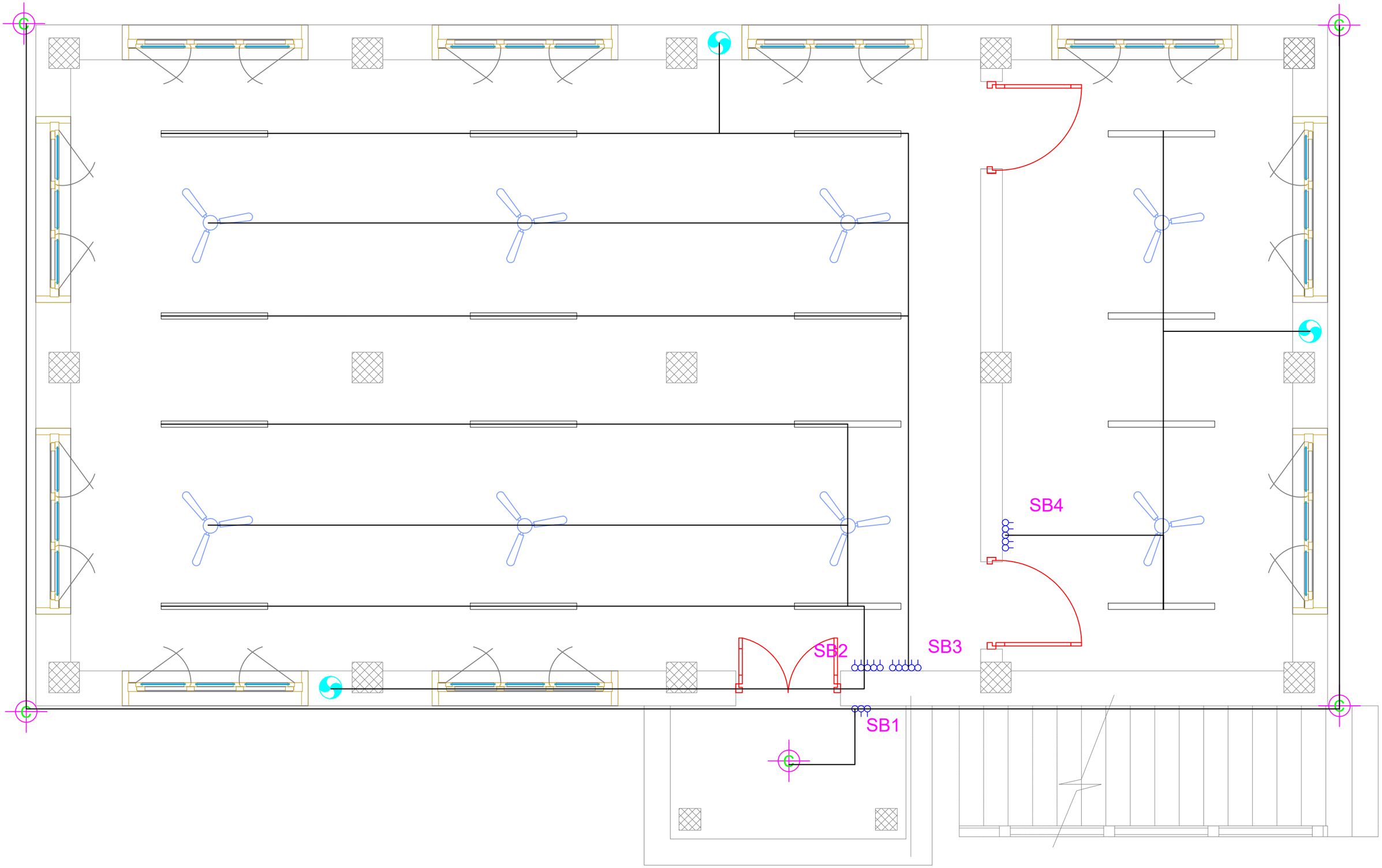

Khorlochhu

ELECTRICAL DRAWING

PROJECT TITLE	DRAWING TITLE
Construction of Doksum Primary School	FITTINGS_&_CONDUCT_LAYOUT_GROUND_FLOOR

NOTES

1. ALL DIMENSIONS ARE IN MILLIMETER & ELEVATION IN METER UNLESS SPECIFIED OTHERWISE.
2. ALL DIMENSIONS MEASURE UNFINISHED SURFACES UNLESS SPECIFIED OTHERWISE.
3. DIMENSIONS ARE TO BE READ AND NOT SCALED OFF.
4. ANY DISCREPANCIES IN THE DRAWING ARE TO BE BROUGHT TO THE IMMEDIATE NOTICE OF THE SUPERVISION TEAM.

CHECKED	APPROVED	DATE	DRAWING NO.
			EL_3
		MARCH, 2026	SCALE
			NTS

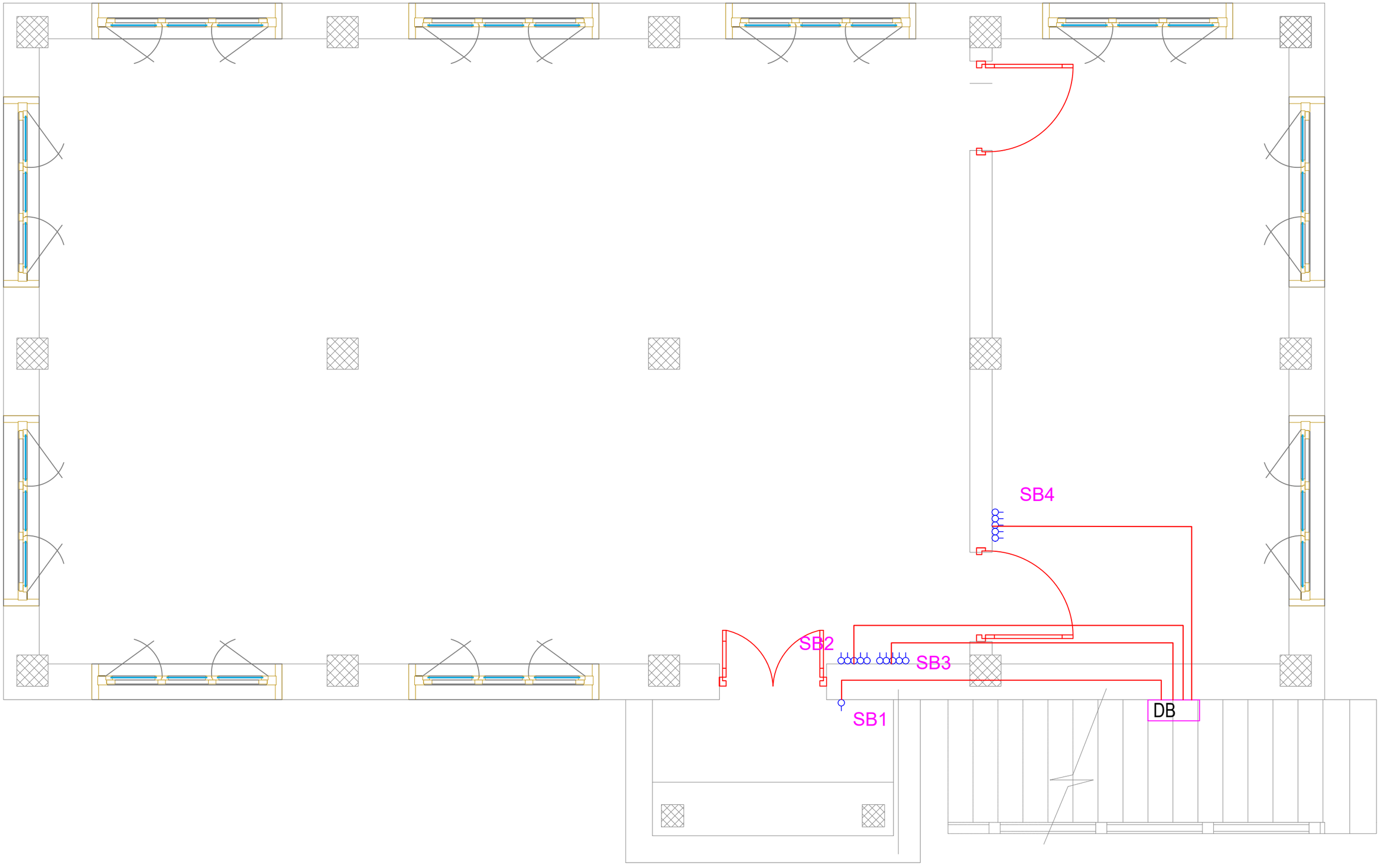

Khorlochhu

ELECTRICAL DRAWING

PROJECT TITLE	DRAWING TITLE
Construction of Doksum Primary School	LIGHT_CIRCUITS_LAYOUT_GROUND_FLOOR

NOTES

1. ALL DIMENSIONS ARE IN MILLIMETER & ELEVATION IN METER UNLESS SPECIFIED OTHERWISE.
2. ALL DIMENSIONS MEASURE UNFINISHED SURFACES UNLESS SPECIFIED OTHERWISE.
3. DIMENSIONS ARE TO BE READ AND NOT SCALED OFF.
4. ANY DISCREPANCIES IN THE DRAWING ARE TO BE BROUGHT TO THE IMMEDIATE NOTICE OF THE SUPERVISION TEAM.

CHECKED	APPROVED	DATE	DRAWING NO.
			EL_4
		MARCH, 2026	SCALE
			NTS

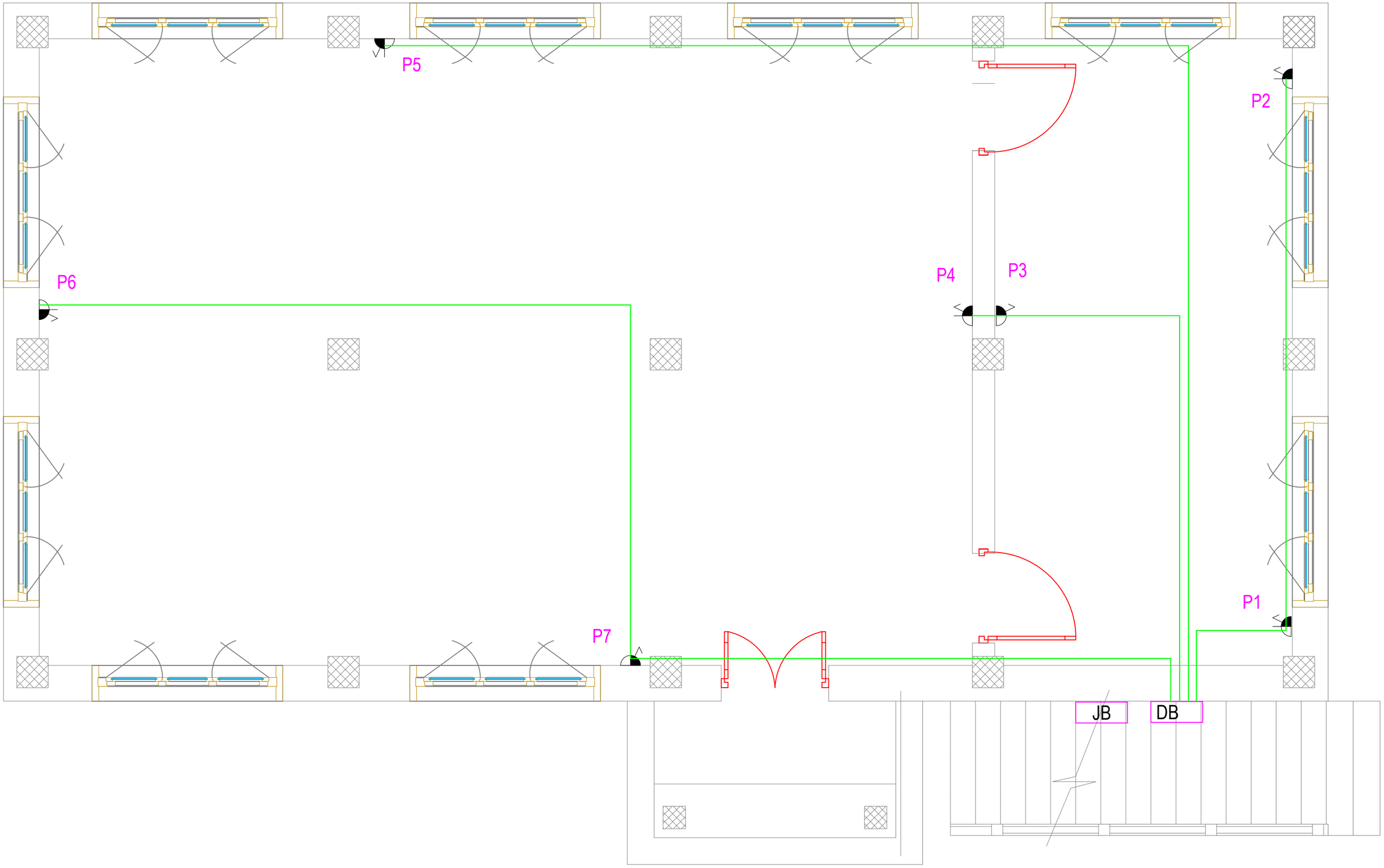

Khorlochhu

ELECTRICAL DRAWING

PROJECT TITLE	DRAWING TITLE
Construction of Doksum Primary School	POWER_SOCKET_OUTLET_&_CONDUITS_LAYOUT_GROUND_FLOOR

NOTES

1. ALL DIMENSIONS ARE IN MILLIMETER & ELEVATION IN METER UNLESS SPECIFIED OTHERWISE.
2. ALL DIMENSIONS MEASURE UNFINISHED SURFACES UNLESS SPECIFIED OTHERWISE.
3. DIMENSIONS ARE TO BE READ AND NOT SCALED OFF.
4. ANY DISCREPANCIES IN THE DRAWING ARE TO BE BROUGHT TO THE IMMEDIATE NOTICE OF THE SUPERVISION TEAM.

CHECKED	APPROVED	DATE	DRAWING NO.
			EL_5
		MARCH, 2026	SCALE
			NTS

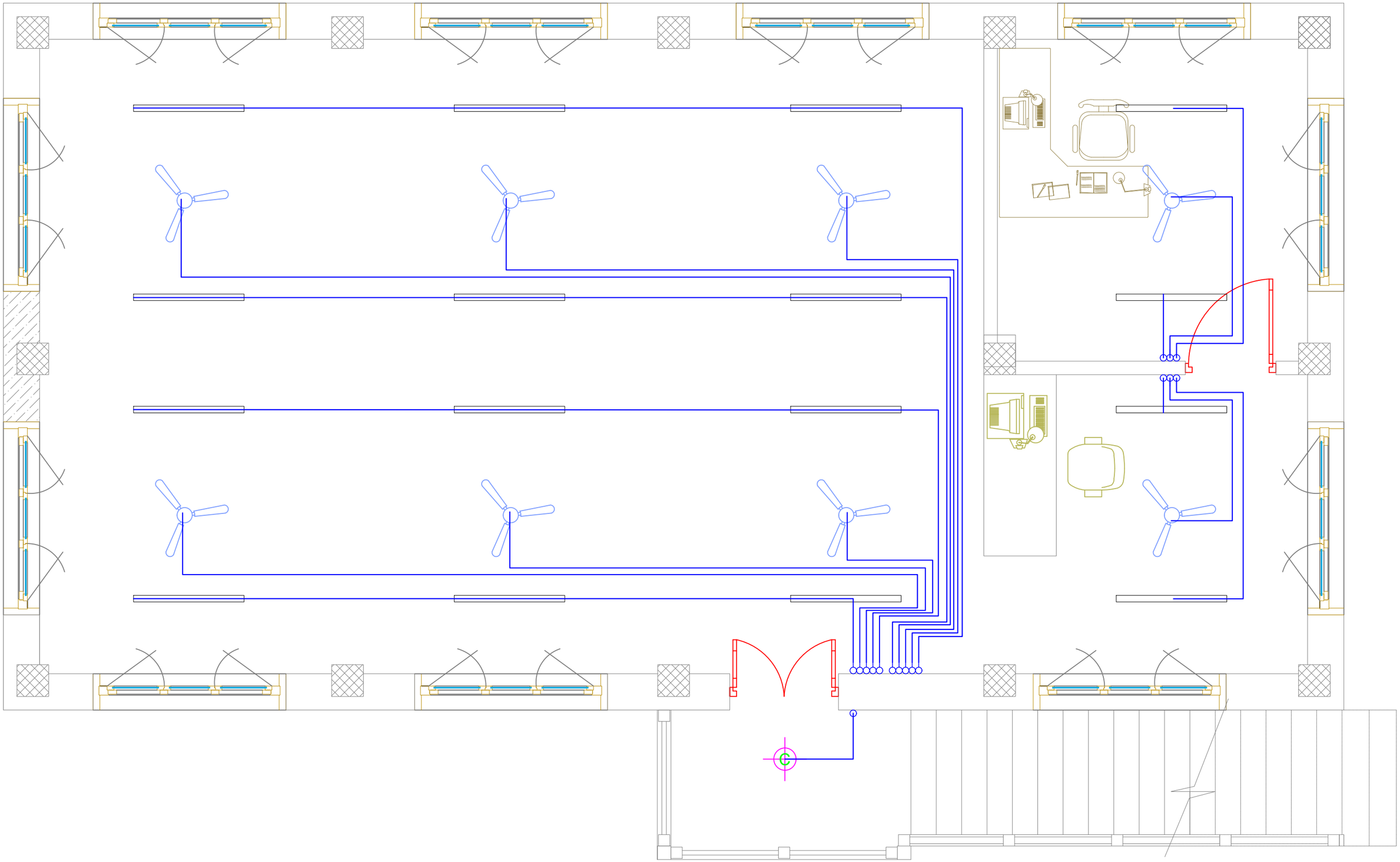

ELECTRICAL DRAWING

PROJECT TITLE	DRAWING TITLE
Construction of Doksum Primary School	FITTINGS_LAYOUT_FIRST_FLOOR

NOTES

1. ALL DIMENSIONS ARE IN MILLIMETER & ELEVATION IN METER UNLESS SPECIFIED OTHERWISE.
2. ALL DIMENSIONS MEASURE UNFINISHED SURFACES UNLESS SPECIFIED OTHERWISE.
3. DIMENSIONS ARE TO BE READ AND NOT SCALED OFF.
4. ANY DISCREPANCIES IN THE DRAWING ARE TO BE BROUGHT TO THE IMMEDIATE NOTICE OF THE SUPERVISION TEAM.

CHECKED	APPROVED	DATE	DRAWING NO.
			EL_6
		MARCH, 2026	SCALE
			NTS

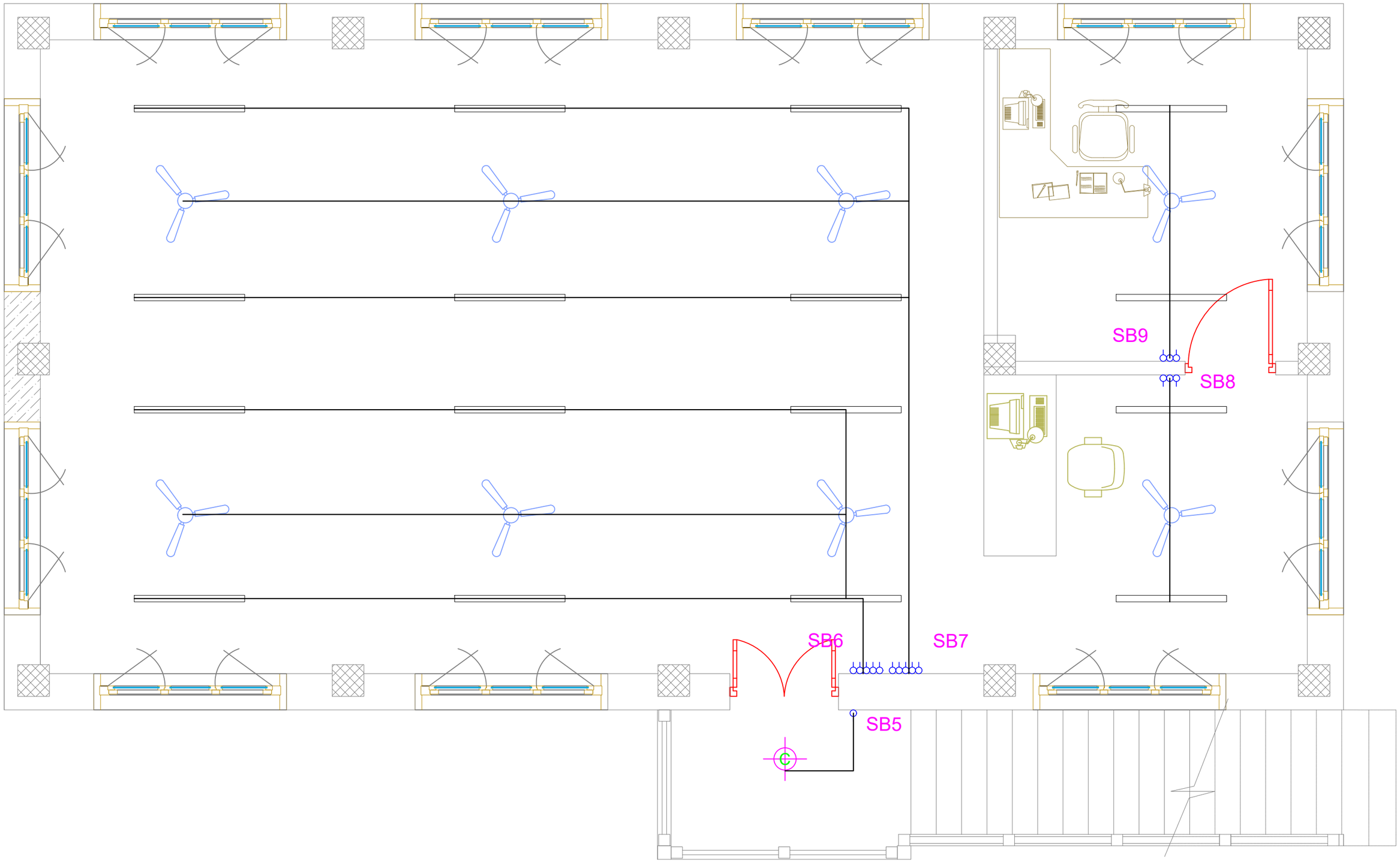

Khorlochhu

ELECTRICAL DRAWING

PROJECT TITLE	DRAWING TITLE
Construction of Doksum Primary School	FITTINGS_&_CONDUCT_LAYOUT_FIRST_FLOOR

NOTES

1. ALL DIMENSIONS ARE IN MILLIMETER & ELEVATION IN METER UNLESS SPECIFIED OTHERWISE.
2. ALL DIMENSIONS MEASURE UNFINISHED SURFACES UNLESS SPECIFIED OTHERWISE.
3. DIMENSIONS ARE TO BE READ AND NOT SCALED OFF.
4. ANY DISCREPANCIES IN THE DRAWING ARE TO BE BROUGHT TO THE IMMEDIATE NOTICE OF THE SUPERVISION TEAM.

CHECKED	APPROVED	DATE	DRAWING NO.
			EL_7
		MARCH, 2026	SCALE
			NTS

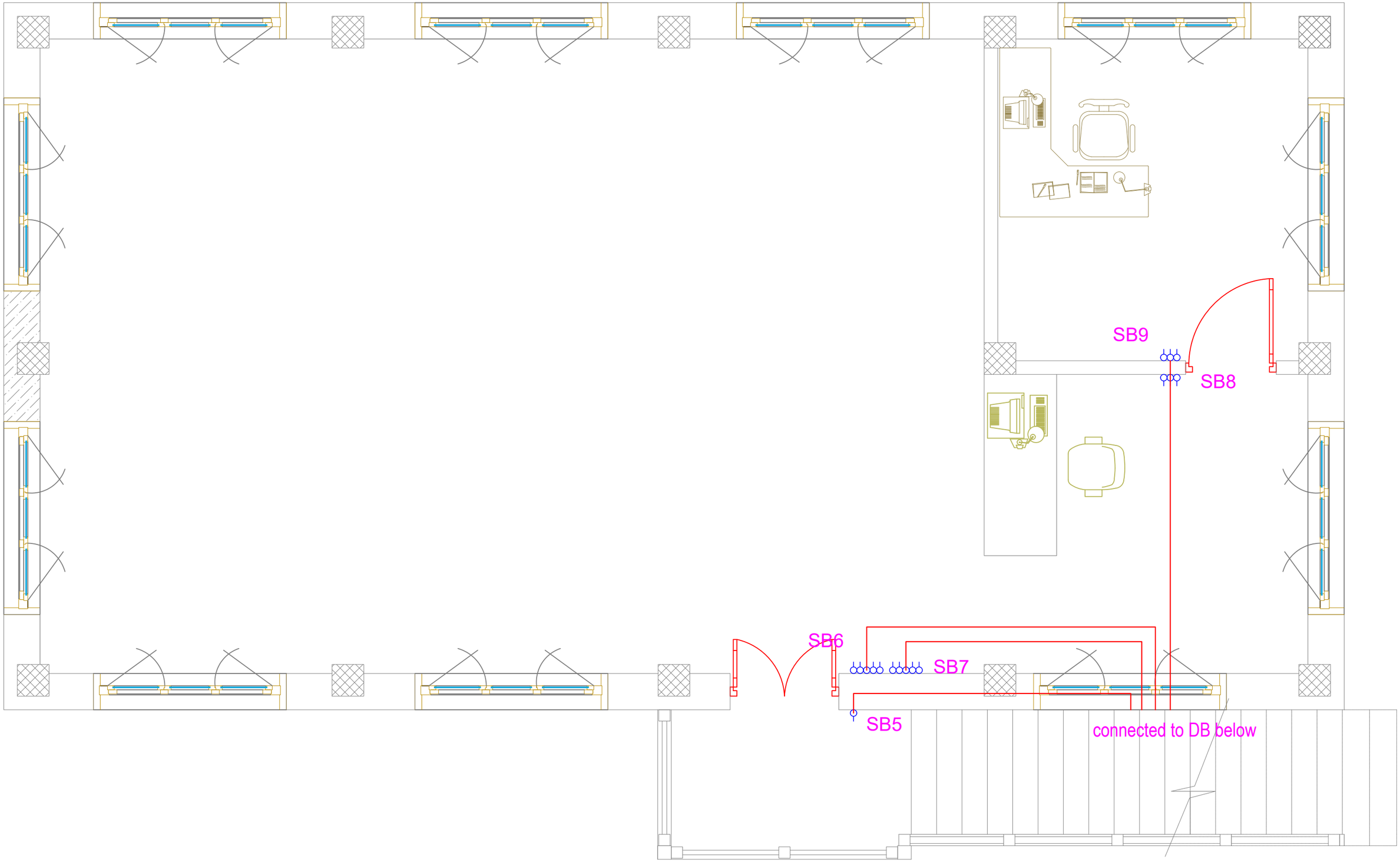

Khorlochhu

ELECTRICAL DRAWING

PROJECT TITLE	DRAWING TITLE
Construction of Doksum Primary School	LIGHT_CIRCUITS_LAYOUT_FIRST_FLOOR

NOTES

1. ALL DIMENSIONS ARE IN MILLIMETER & ELEVATION IN METER UNLESS SPECIFIED OTHERWISE.
2. ALL DIMENSIONS MEASURE UNFINISHED SURFACES UNLESS SPECIFIED OTHERWISE.
3. DIMENSIONS ARE TO BE READ AND NOT SCALED OFF.
4. ANY DISCREPANCIES IN THE DRAWING ARE TO BE BROUGHT TO THE IMMEDIATE NOTICE OF THE SUPERVISION TEAM.

CHECKED	APPROVED	DATE	DRAWING NO.
			EL_8
		MARCH, 2026	SCALE
			NTS

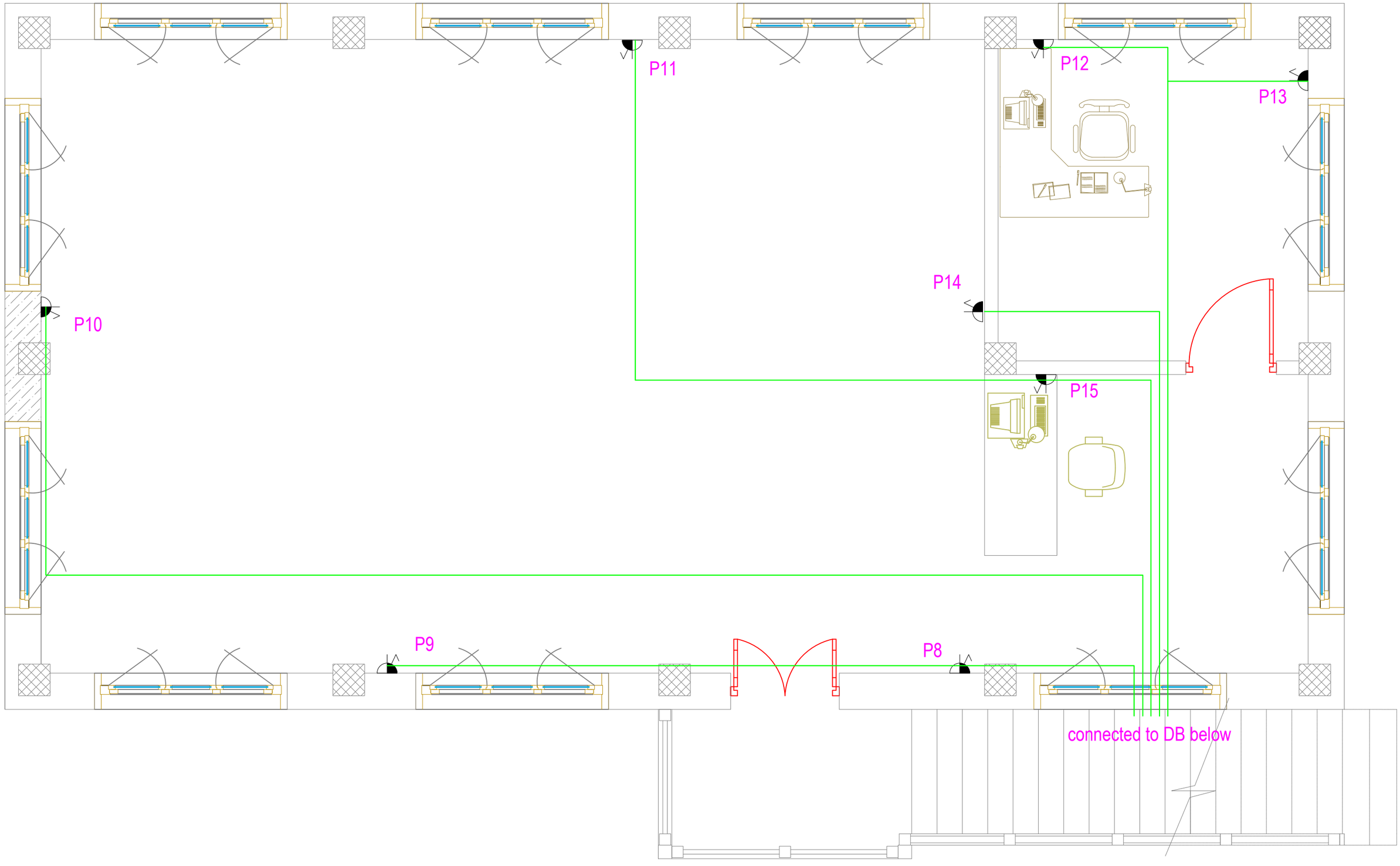

Khorlochhu

ELECTRICAL DRAWING

PROJECT TITLE	DRAWING TITLE
Construction of Doksum Primary School	POWER_SOCKET_OUTLET_&_CONDUITS_LAYOUT_FIRST_FLOOR

NOTES

1. ALL DIMENSIONS ARE IN MILLIMETER & ELEVATION IN METER UNLESS SPECIFIED OTHERWISE.
2. ALL DIMENSIONS MEASURE UNFINISHED SURFACES UNLESS SPECIFIED OTHERWISE.
3. DIMENSIONS ARE TO BE READ AND NOT SCALED OFF.
4. ANY DISCREPANCIES IN THE DRAWING ARE TO BE BROUGHT TO THE IMMEDIATE NOTICE OF THE SUPERVISION TEAM.

CHECKED	APPROVED	DATE	DRAWING NO.
			EL_9
		MARCH, 2026	SCALE
			NTS

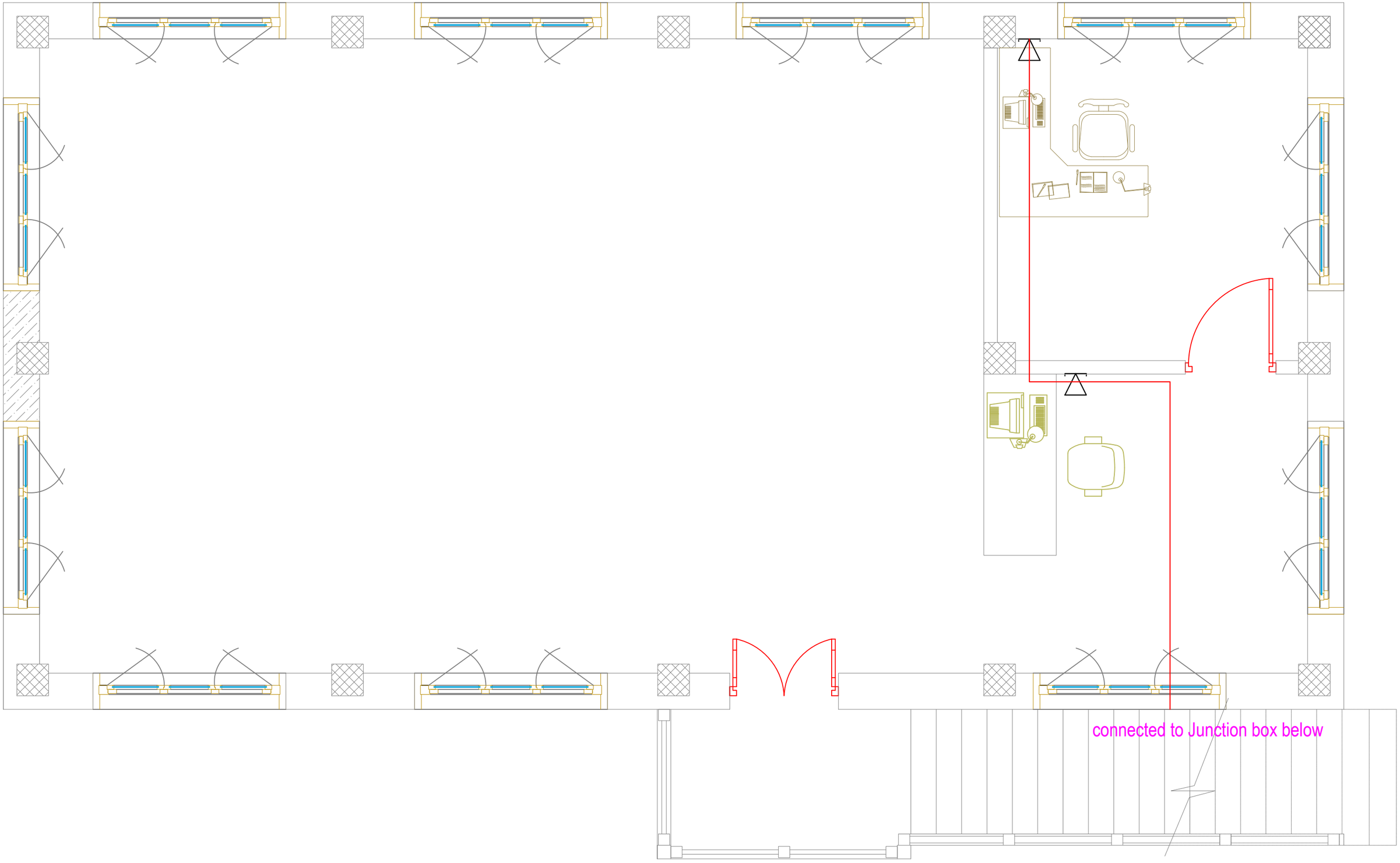

Khorlochhu

ELECTRICAL DRAWING

PROJECT TITLE	DRAWING TITLE
Construction of Doksum Primary School	LAN,TELEPHONE_OUTLET_&_CONDUITS_LAYOUT_FIRST_FLOOR

NOTES

1. ALL DIMENSIONS ARE IN MILLIMETER & ELEVATION IN METER UNLESS SPECIFIED OTHERWISE.
2. ALL DIMENSIONS MEASURE UNFINISHED SURFACES UNLESS SPECIFIED OTHERWISE.
3. DIMENSIONS ARE TO BE READ AND NOT SCALED OFF.
4. ANY DISCREPANCIES IN THE DRAWING ARE TO BE BROUGHT TO THE IMMEDIATE NOTICE OF THE SUPERVISION TEAM.

CHECKED	APPROVED	DATE	DRAWING NO.
			EL_10
		MARCH, 2026	SCALE
			NTS

DISTRIBUTION BOARD

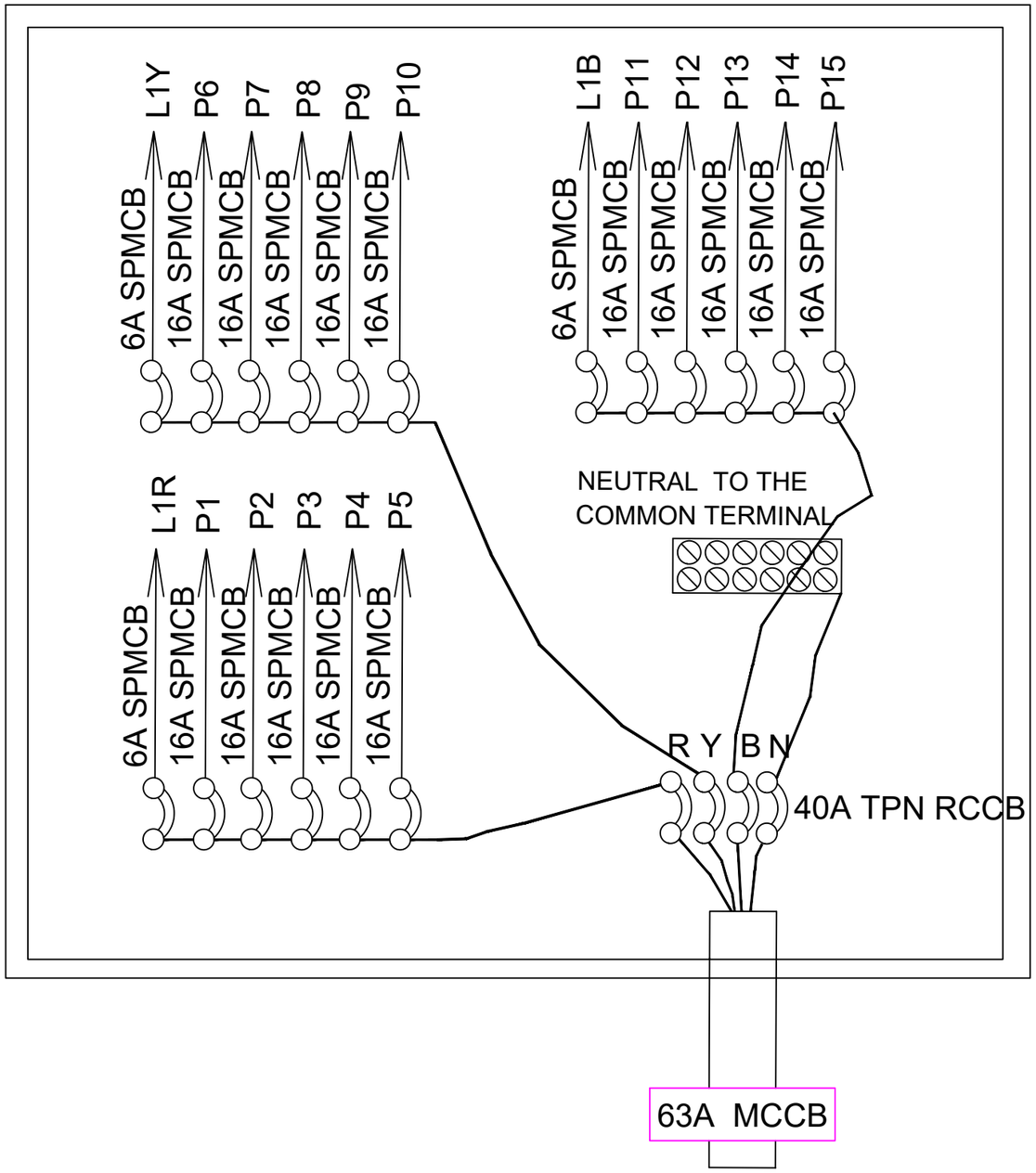

4 CORE,10 sq mm armoured UG cable
or as recommended by BPC

6 WAY TPN DB,DOUBLE DOOR TYPE,& 40A TPN RCCB WITH FOLLOWING OUTGOING:
6A SPMCB - 3 NOs.
16A SPMCB - 15 NOs.

BALANCE LOAD IN WATTS

R-PHASE	Y-PHASE	B-PHASE
L1- 790	L1- 586	L1- 500
P1- 2000	P6- 2000	P11-2000
P2- 2000	P7- 2000	P12-2000
P3- 2000	P8- 2000	P13-2000
P4- 2000	P9- 2000	P14-2000
P5- 2000	P10- 2000	P15-2000
10,790	10,586	10,500

L1R=SB1,SB2,SB3
L1Y=SB4,SB5,SB6
L1B=SB7,SB8,SB9

Connected load= 31,876 W
Demand load(L.F- 70%)= 22,313 W

Khorlochhu

ELECTRICAL DRAWING		NOTES	CHECKED	APPROVED	DATE	DRAWING NO.
PROJECT TITLE	DRAWING TITLE	1. ALL DIMENSIONS ARE IN MILLIMETER & ELEVATION IN METER UNLESS SPECIFIED OTHERWISE. 2. ALL DIMENSIONS MEASURE UNFINISHED SURFACES UNLESS SPECIFIED OTHERWISE. 3. DIMENSIONS ARE TO BE READ AND NOT SCALED OFF. 4. ANY DISCREPANCIES IN THE DRAWING ARE TO BE BROUGHT TO THE IMMEDIATE NOTICE OF THE SUPERVISION TEAM.				EL_11
Construction of Doksum Primary School	MDB_DETAILS				MARCH, 2026	SCALE NTS

ARCHITECTURAL DRAWINGS

ACADEMIC BLOCK

Owner - Khorlochhu Hydro Power Limited
Location - Doksum New Township, Trashiyangtse

Khorlochhu

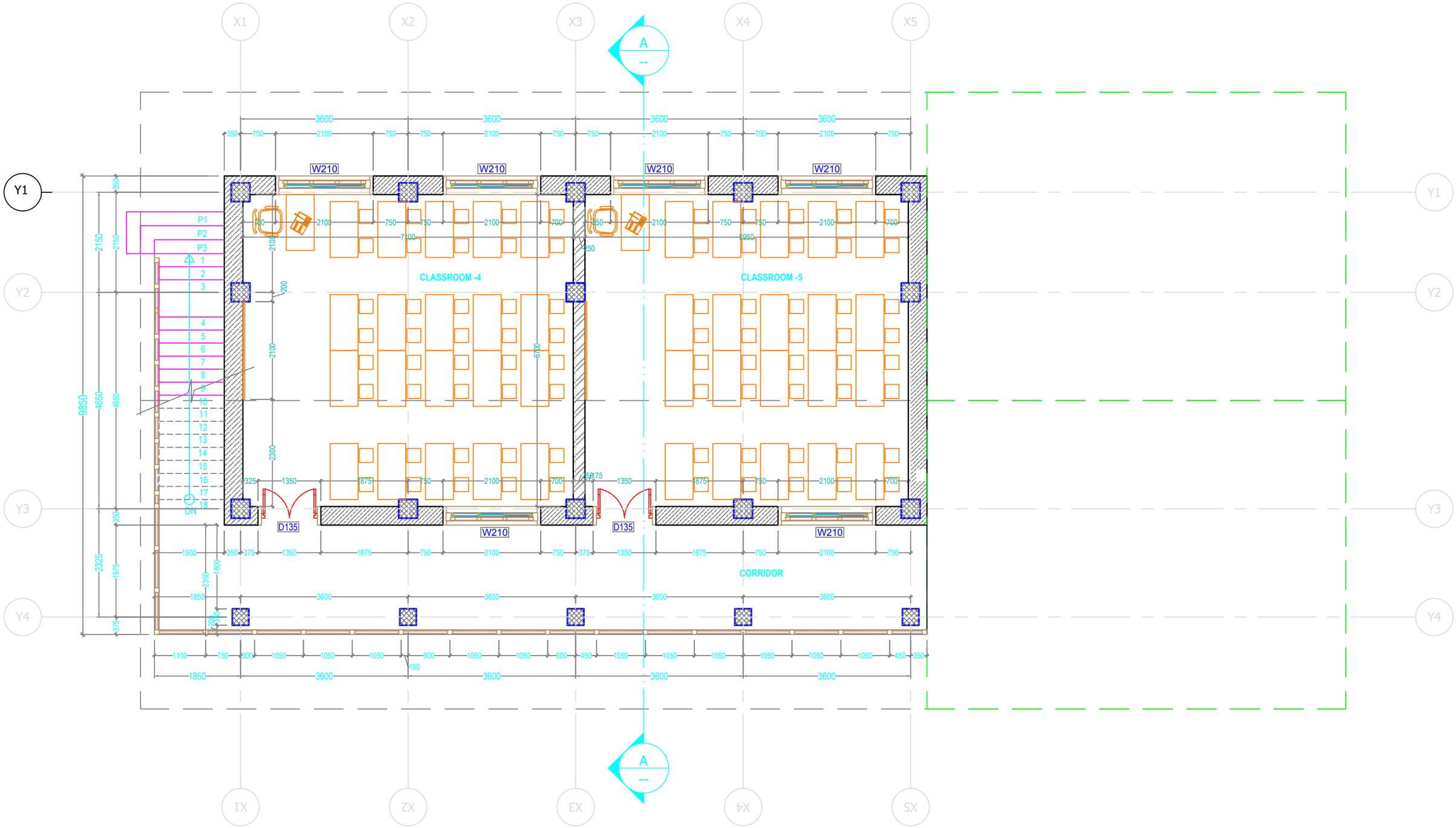

ARCHITECTURAL DRAWING

PROJECT TITLE	DRAWING TITLE
Construction of Doksum Primary School	FIRST_FLOOR_PLAN

NOTES

1. ALL DIMENSIONS ARE IN MILLIMETER & ELEVATION IN METER UNLESS SPECIFIED OTHERWISE.
2. ALL DIMENSIONS MEASURE UNFINISHED SURFACES UNLESS SPECIFIED OTHERWISE.
3. DIMENSIONS ARE TO BE READ AND NOT SCALED OFF.
4. ANY DISCREPANCIES IN THE DRAWING ARE TO BE BROUGHT TO THE IMMEDIATE NOTICE OF THE SUPERVISION TEAM.

CHECKED	APPROVED	DATE	DRAWING NO.
			AR_01
		MARCH, 2026	SCALE
			NTS

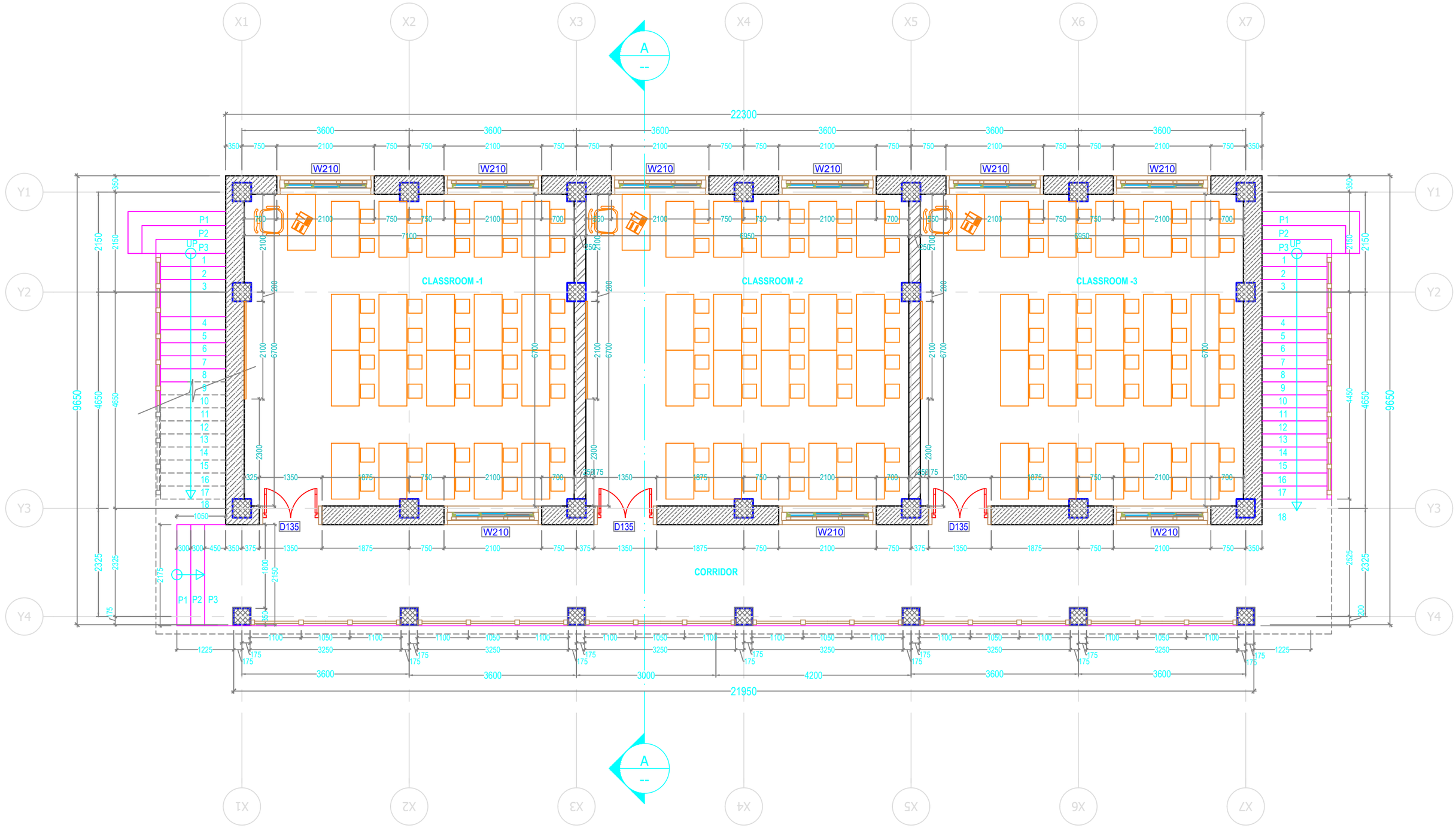

ARCHITECTURAL DRAWING

PROJECT TITLE	DRAWING TITLE
Construction of Doksum Primary School	GROUND_FLOOR_PLAN

NOTES

1. ALL DIMENSIONS ARE IN MILLIMETER & ELEVATION IN METER UNLESS SPECIFIED OTHERWISE.
2. ALL DIMENSIONS MEASURE UNFINISHED SURFACES UNLESS SPECIFIED OTHERWISE.
3. DIMENSIONS ARE TO BE READ AND NOT SCALED OFF.
4. ANY DISCREPANCIES IN THE DRAWING ARE TO BE BROUGHT TO THE IMMEDIATE NOTICE OF THE SUPERVISION TEAM.

CHECKED	APPROVED	DATE	DRAWING NO.
			AR_02
		MARCH, 2026	SCALE
			NTS

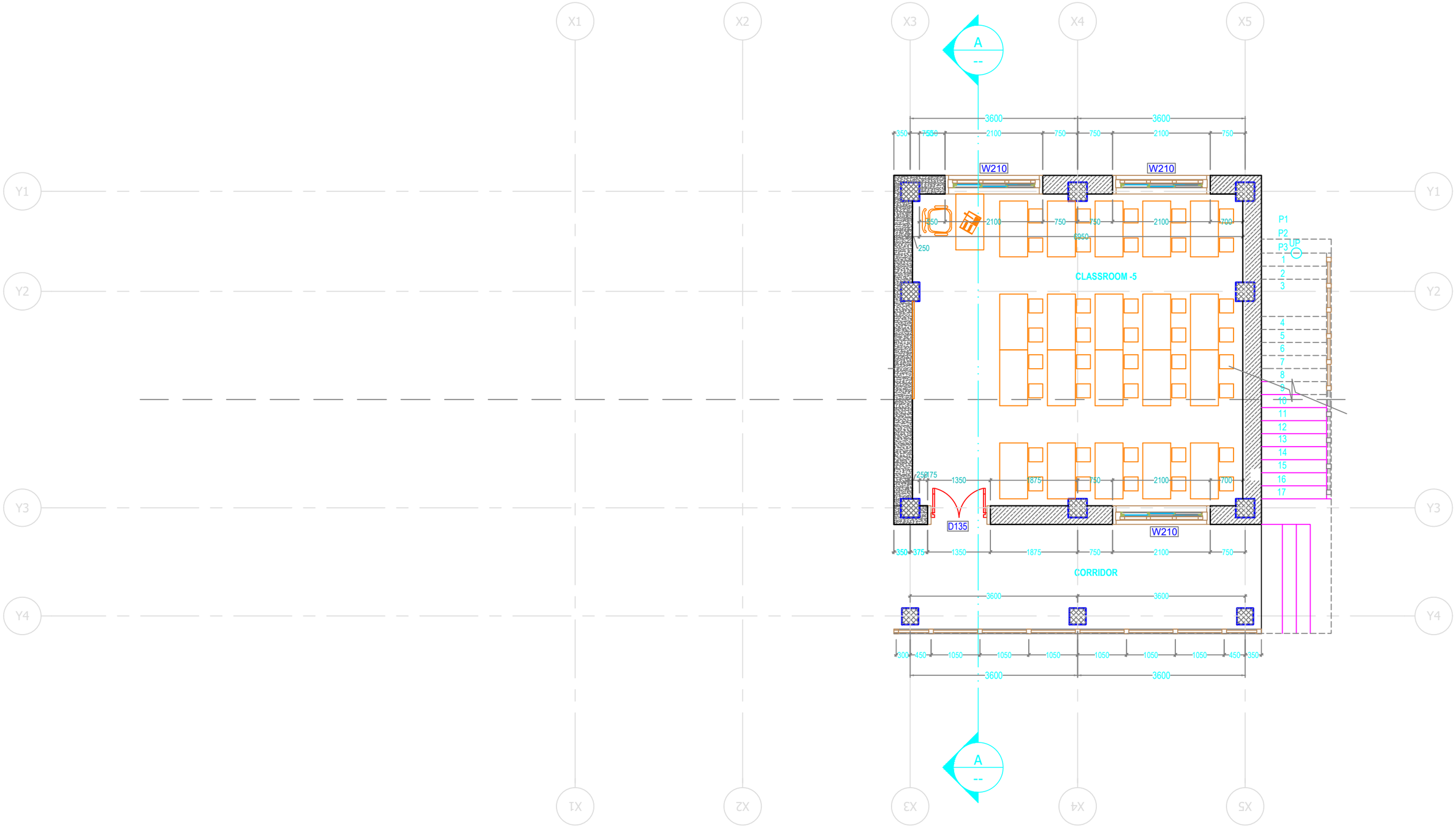

Khorlochhu	**ARCHITECTURAL DRAWING**	**NOTES**	**CHECKED**	**APPROVED**	**DATE**	**DRAWING NO.**
	PROJECT TITLE	**DRAWING TITLE**				**AR_03**
	Construction of Doksum Primary School	**GROUND_FLOOR_PLAN**			MARCH, 2026	**SCALE**
						NTS

1. ALL DIMENSIONS ARE IN MILLIMETER & ELEVATION IN METER UNLESS SPECIFIED OTHERWISE.
2. ALL DIMENSIONS MEASURE UNFINISHED SURFACES UNLESS SPECIFIED OTHERWISE.
3. DIMENSIONS ARE TO BE READ AND NOT SCALED OFF.
4. ANY DISCREPANCIES IN THE DRAWING ARE TO BE BROUGHT TO THE IMMEDIATE NOTICE OF THE SUPERVISION TEAM.

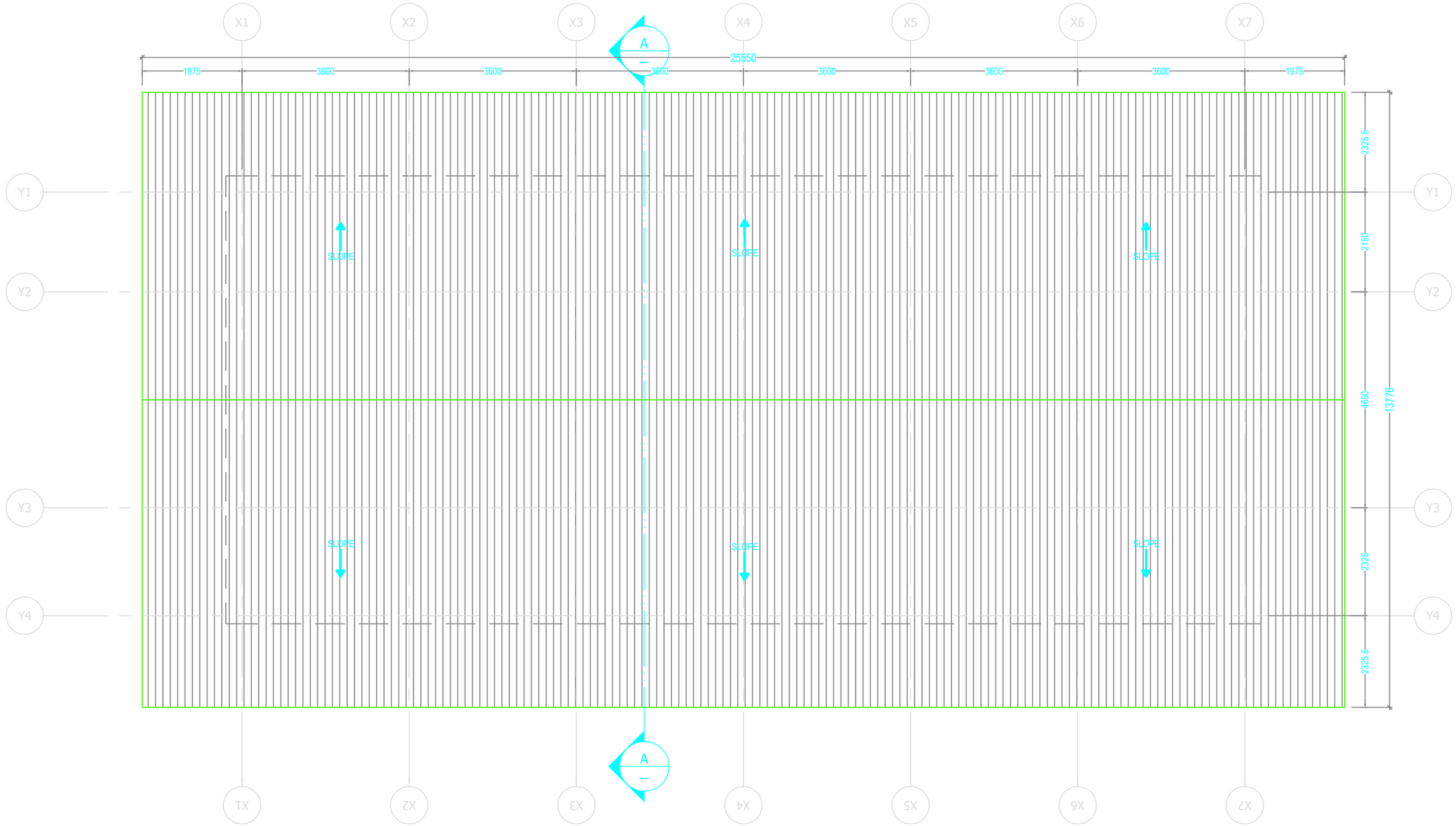

ARCHITECTURAL DRAWING

PROJECT TITLE	DRAWING TITLE
Construction of Doksum Primary School	ROOF_PLAN

NOTES

1. ALL DIMENSIONS ARE IN MILLIMETER & ELEVATION IN METER UNLESS SPECIFIED OTHERWISE.
2. ALL DIMENSIONS MEASURE UNFINISHED SURFACES UNLESS SPECIFIED OTHERWISE.
3. DIMENSIONS ARE TO BE READ AND NOT SCALED OFF.
4. ANY DISCREPANCIES IN THE DRAWING ARE TO BE BROUGHT TO THE IMMEDIATE NOTICE OF THE SUPERVISION TEAM.

CHECKED	APPROVED	DATE	DRAWING NO.
			AR_04
		MARCH, 2026	SCALE
			NTS

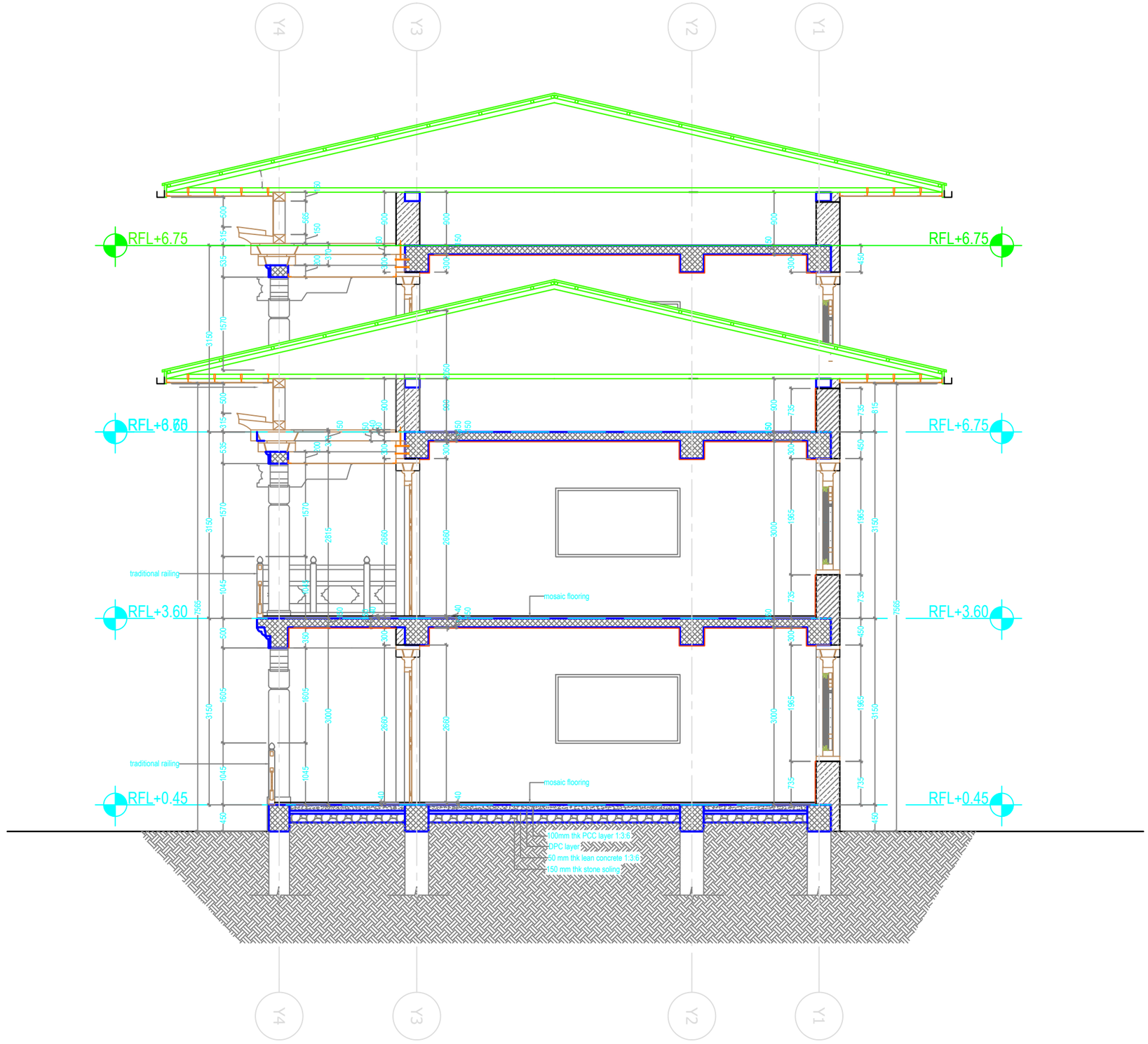

Khorlochhu

ARCHITECTURAL DRAWING

PROJECT TITLE	DRAWING TITLE
Construction of Doksum Primary School	SECTION_A-A

NOTES

1. ALL DIMENSIONS ARE IN MILLIMETER & ELEVATION IN METER UNLESS SPECIFIED OTHERWISE.
2. ALL DIMENSIONS MEASURE UNFINISHED SURFACES UNLESS SPECIFIED OTHERWISE.
3. DIMENSIONS ARE TO BE READ AND NOT SCALED OFF.
4. ANY DISCREPANCIES IN THE DRAWING ARE TO BE BROUGHT TO THE IMMEDIATE NOTICE OF THE SUPERVISION TEAM.

CHECKED	APPROVED	DATE	DRAWING NO.
			AR_05
		MARCH, 2026	SCALE
			NTS

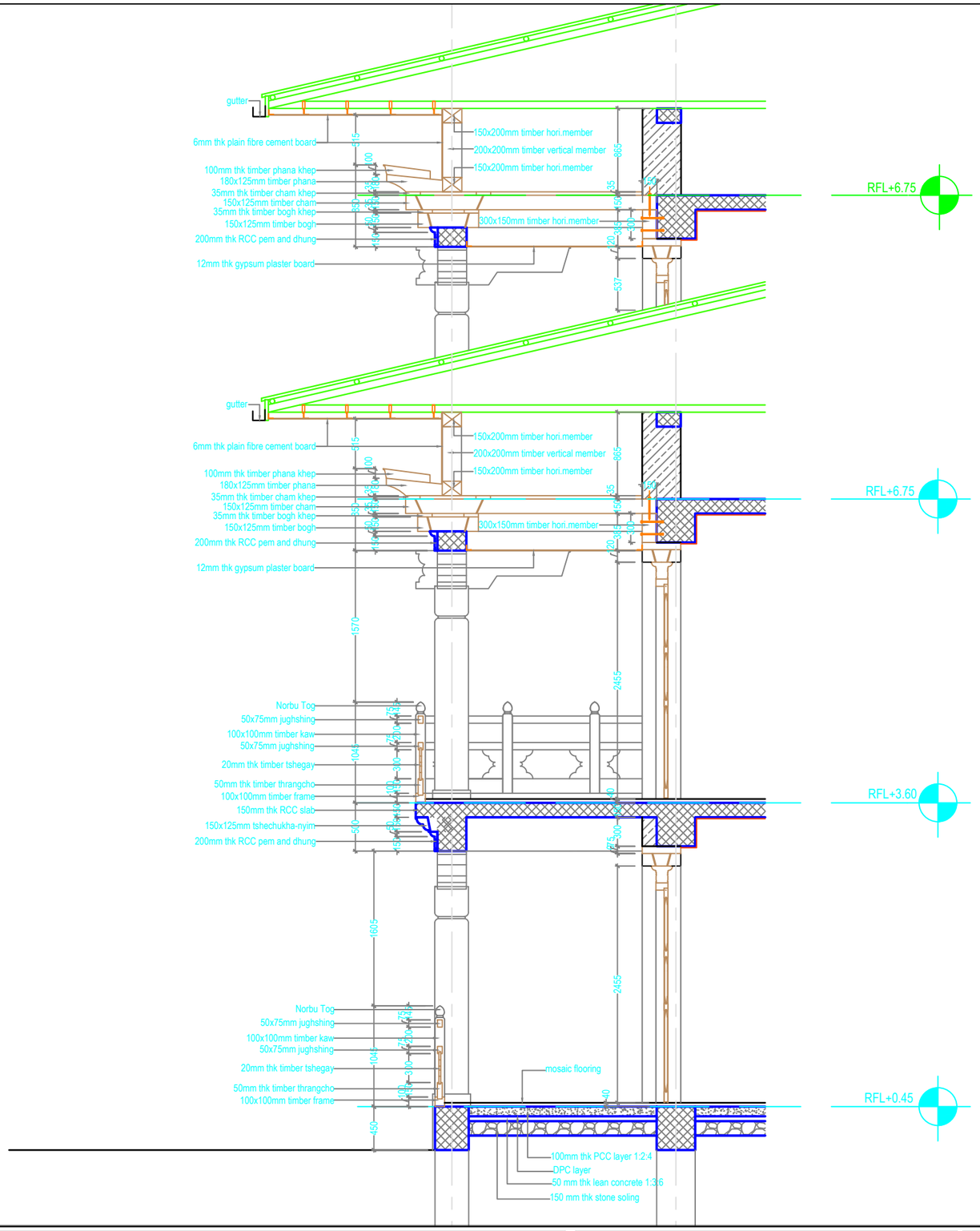

Khorlochhu

ARCHITECTURAL DRAWING

PROJECT TITLE	DRAWING TITLE
Construction of Doksum Primary School	DETAIL_A

NOTES

1. ALL DIMENSIONS ARE IN MILLIMETER & ELEVATION IN METER UNLESS SPECIFIED OTHERWISE.
2. ALL DIMENSIONS MEASURE UNFINISHED SURFACES UNLESS SPECIFIED OTHERWISE.
3. DIMENSIONS ARE TO BE READ AND NOT SCALED OFF.
4. ANY DISCREPANCIES IN THE DRAWING ARE TO BE BROUGHT TO THE IMMEDIATE NOTICE OF THE SUPERVISION TEAM.

CHECKED	APPROVED	DATE	DRAWING NO.
			AR_06
		MARCH, 2026	SCALE
			NTS

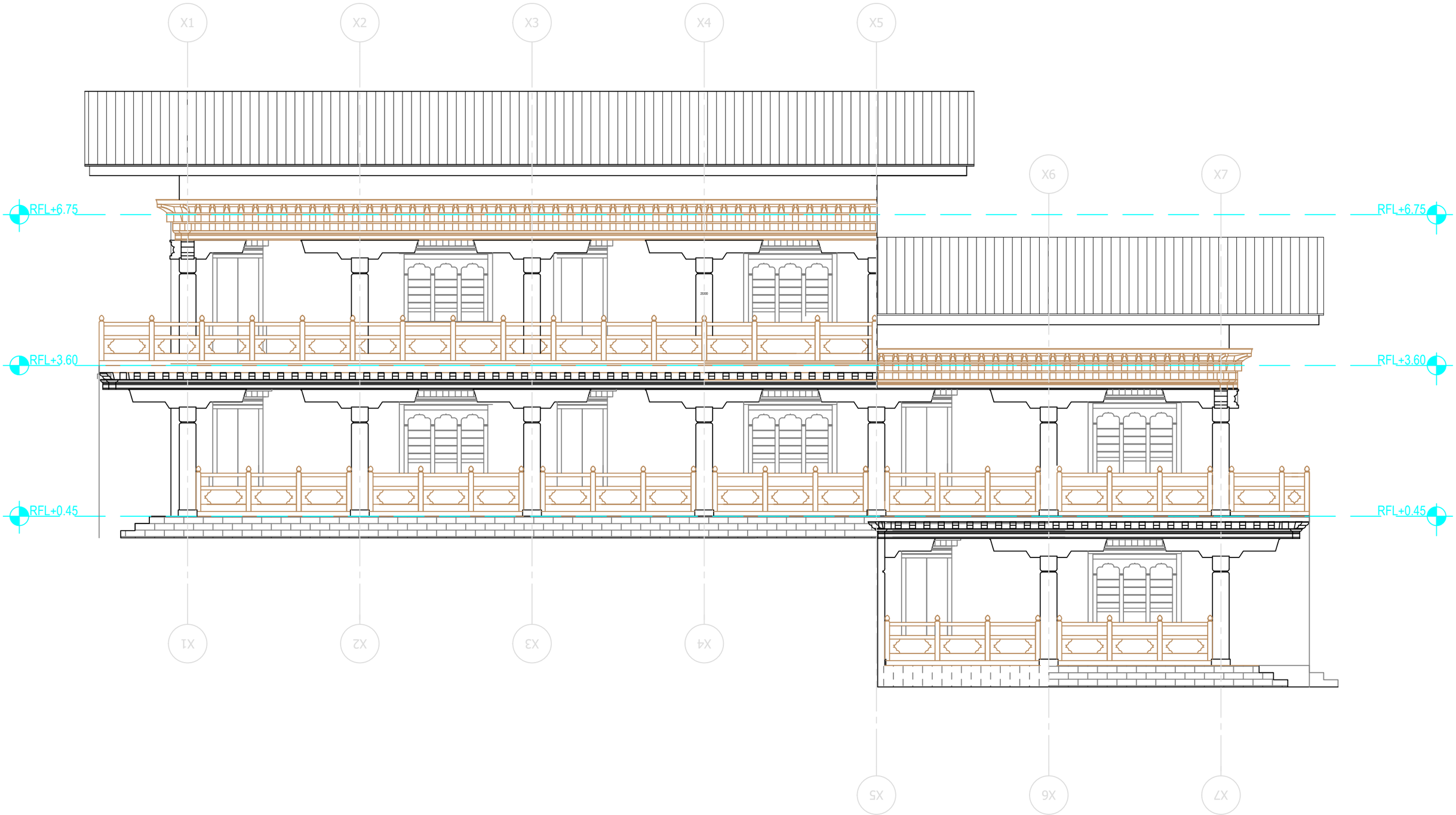

Khorlochhu

ARCHITECTURAL DRAWING

PROJECT TITLE	DRAWING TITLE
Construction of Doksum Primary School	ELEVATION_A

NOTES

1. ALL DIMENSIONS ARE IN MILLIMETER & ELEVATION IN METER UNLESS SPECIFIED OTHERWISE.
2. ALL DIMENSIONS MEASURE UNFINISHED SURFACES UNLESS SPECIFIED OTHERWISE.
3. DIMENSIONS ARE TO BE READ AND NOT SCALED OFF.
4. ANY DISCREPANCIES IN THE DRAWING ARE TO BE BROUGHT TO THE IMMEDIATE NOTICE OF THE SUPERVISION TEAM.

CHECKED	APPROVED	DATE	DRAWING NO.
		MARCH, 2026	AR_07
			SCALE
			NTS

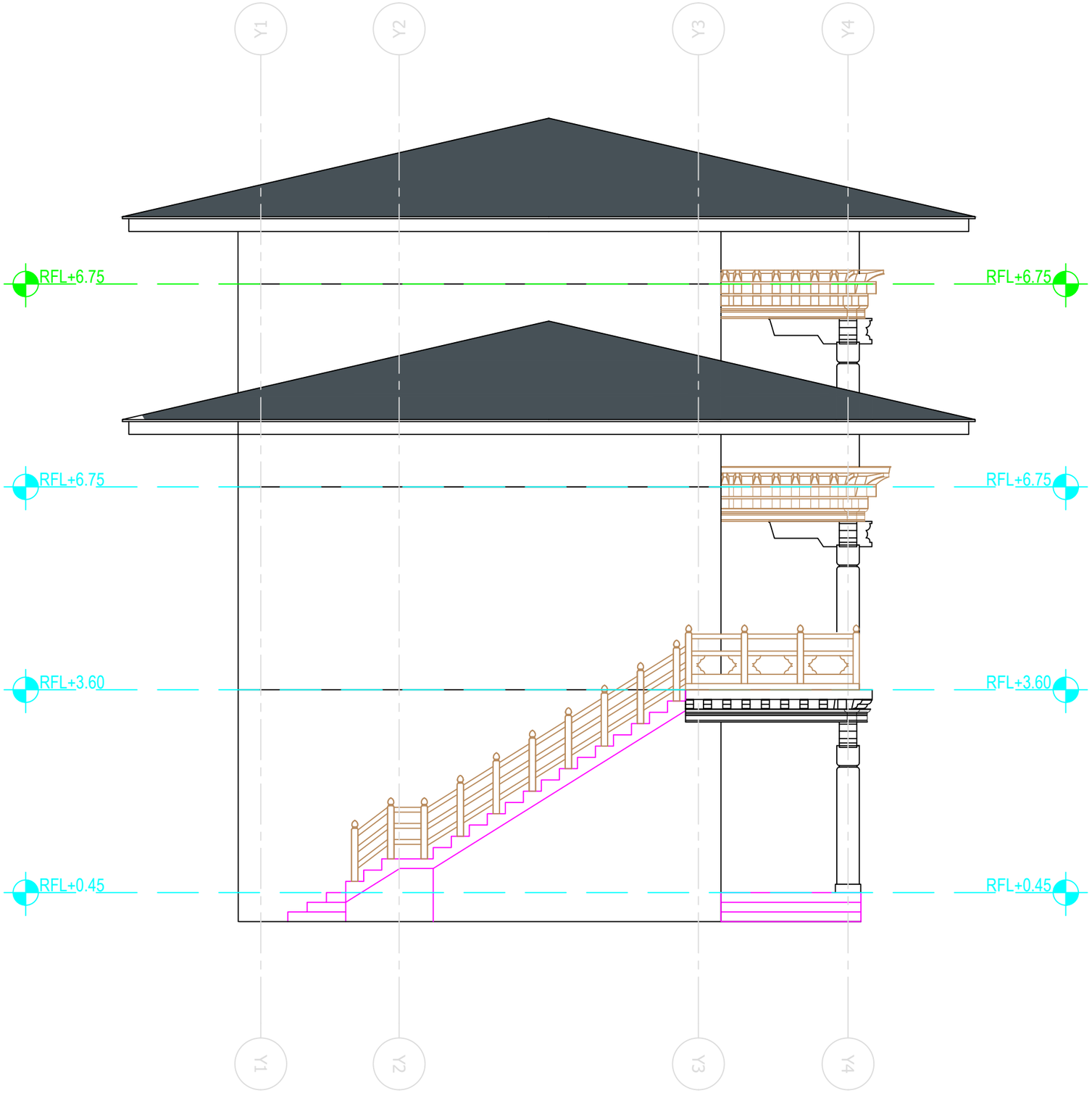

Khorlochhu

ARCHITECTURAL DRAWING

PROJECT TITLE	DRAWING TITLE
Construction of Doksum Primary School	ELEVATION_B

NOTES

1. ALL DIMENSIONS ARE IN MILLIMETER & ELEVATION IN METER UNLESS SPECIFIED OTHERWISE.
2. ALL DIMENSIONS MEASURE UNFINISHED SURFACES UNLESS SPECIFIED OTHERWISE.
3. DIMENSIONS ARE TO BE READ AND NOT SCALED OFF.
4. ANY DISCREPANCIES IN THE DRAWING ARE TO BE BROUGHT TO THE IMMEDIATE NOTICE OF THE SUPERVISION TEAM.

CHECKED	APPROVED	DATE	DRAWING NO.
			AR_08
		MARCH, 2026	SCALE
			NTS

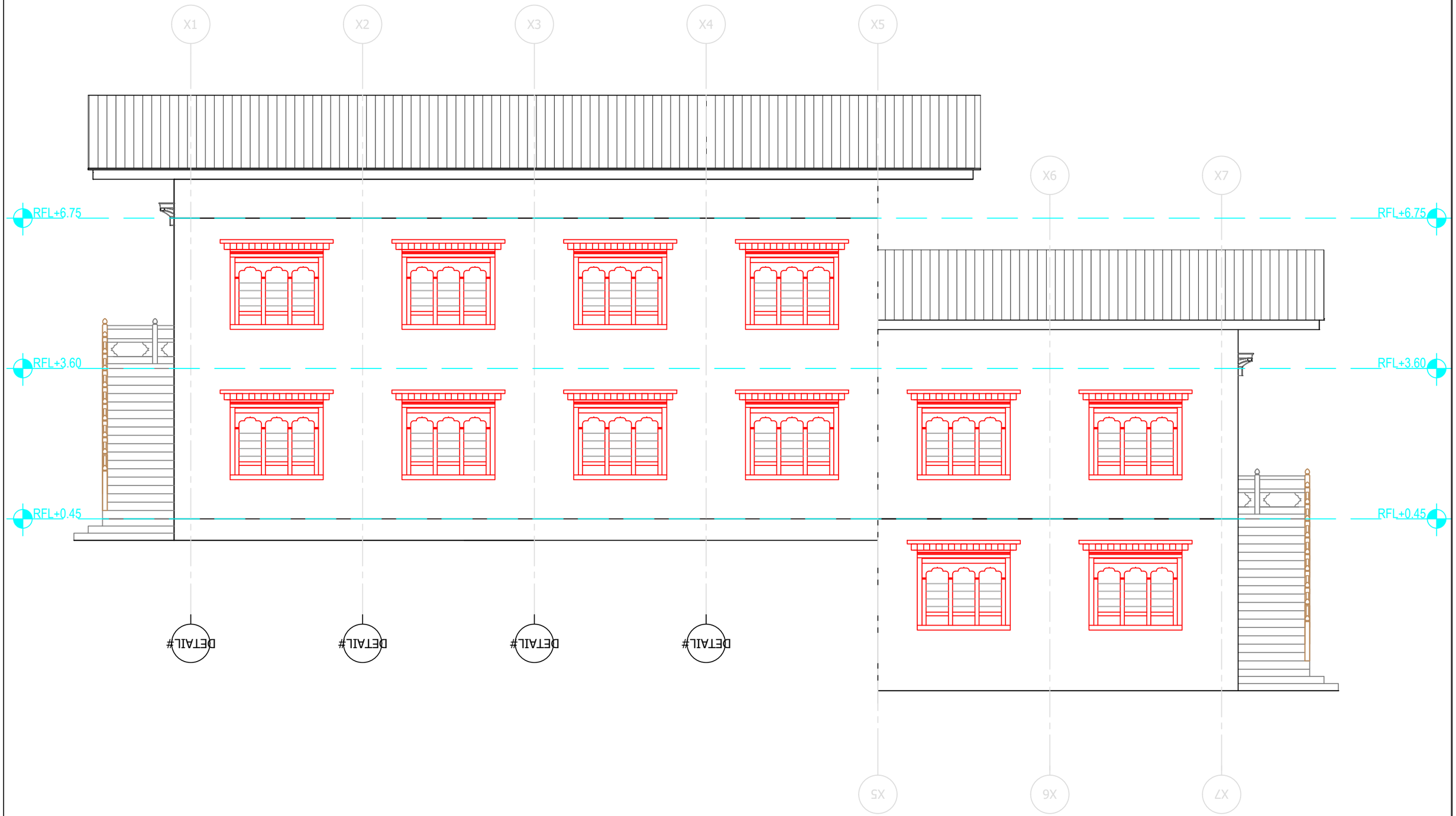

Khorlochhu

ARCHITECTURAL DRAWING

PROJECT TITLE	DRAWING TITLE
Construction of Doksum Primary School	ELEVATION_C

NOTES

1. ALL DIMENSIONS ARE IN MILLIMETER & ELEVATION IN METER UNLESS SPECIFIED OTHERWISE.
2. ALL DIMENSIONS MEASURE UNFINISHED SURFACES UNLESS SPECIFIED OTHERWISE.
3. DIMENSIONS ARE TO BE READ AND NOT SCALED OFF.
4. ANY DISCREPANCIES IN THE DRAWING ARE TO BE BROUGHT TO THE IMMEDIATE NOTICE OF THE SUPERVISION TEAM.

CHECKED	APPROVED	DATE	DRAWING NO.
			AR_09
		MARCH, 2026	SCALE
			NTS

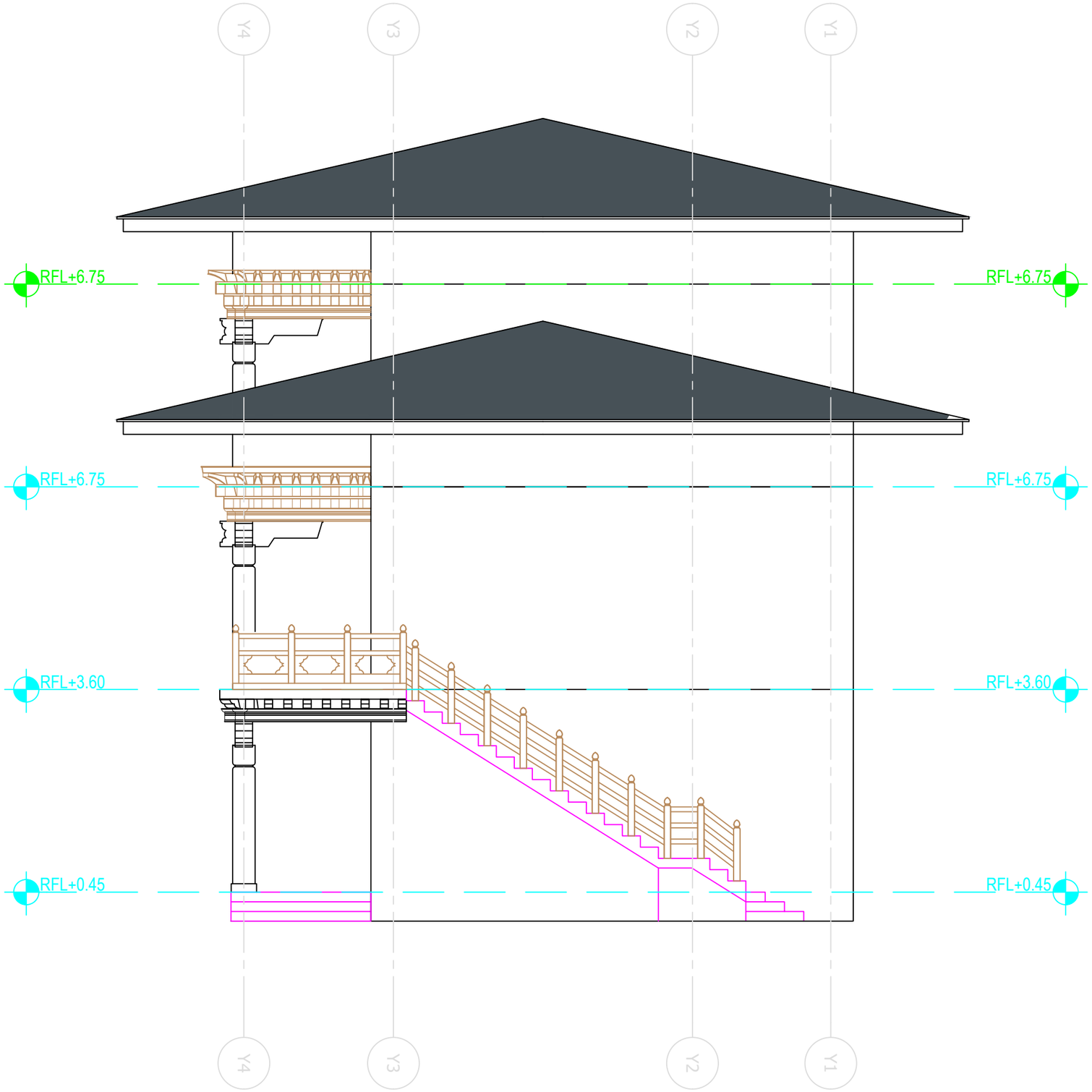

Khorlochhu

ARCHITECTURAL DRAWING

PROJECT TITLE	DRAWING TITLE
Construction of Doksum Primary School	ELEVATION_D

NOTES

1. ALL DIMENSIONS ARE IN MILLIMETER & ELEVATION IN METER UNLESS SPECIFIED OTHERWISE.
2. ALL DIMENSIONS MEASURE UNFINISHED SURFACES UNLESS SPECIFIED OTHERWISE.
3. DIMENSIONS ARE TO BE READ AND NOT SCALED OFF.
4. ANY DISCREPANCIES IN THE DRAWING ARE TO BE BROUGHT TO THE IMMEDIATE NOTICE OF THE SUPERVISION TEAM.

CHECKED	APPROVED	DATE	DRAWING NO.
			AR_10
		MARCH, 2026	SCALE
			NTS

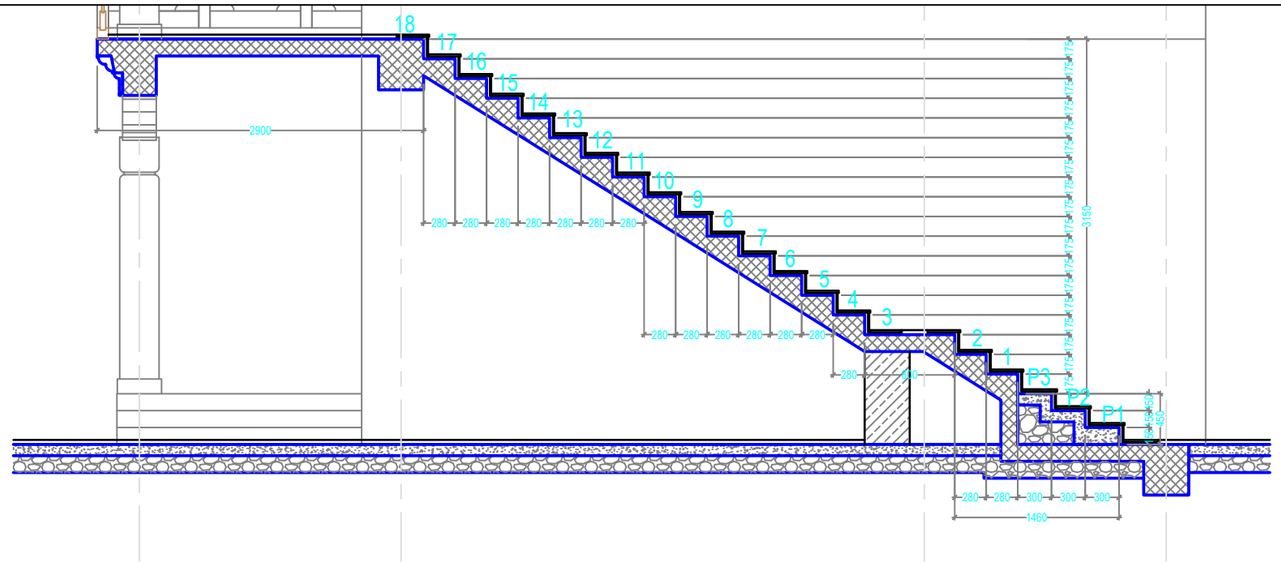

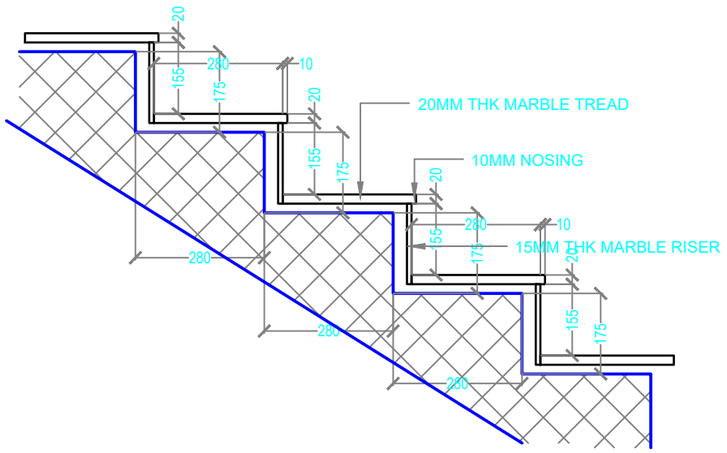

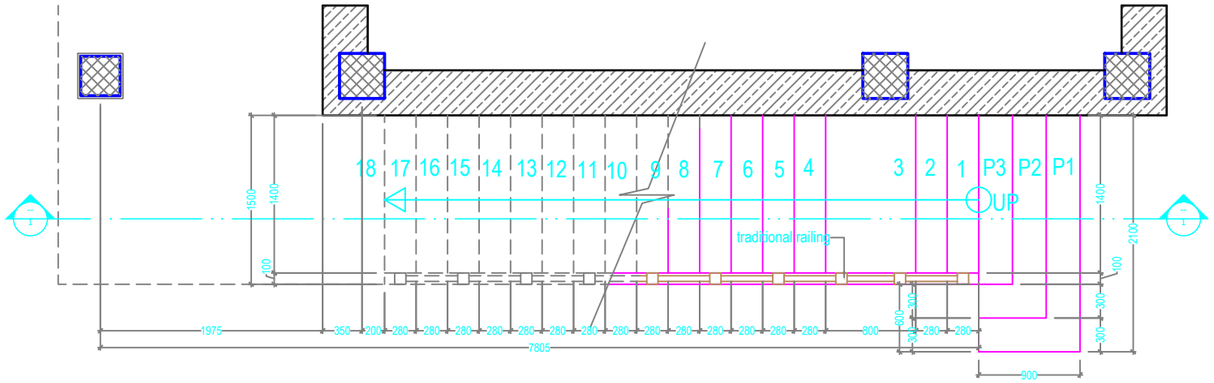

GROUND_FLOOR_TO_FIRST_FLOOR

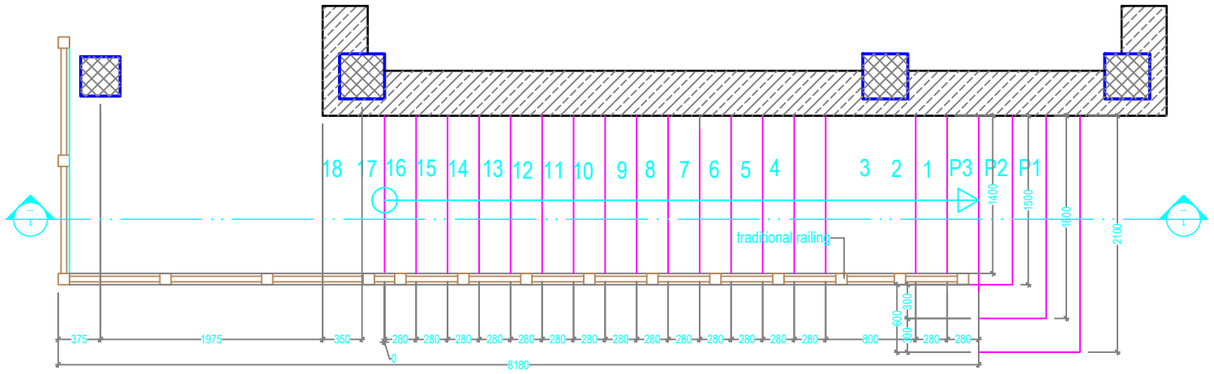

FIRST_FLOOR_TO_GROUND_FLOOR

Khorlochhu

ARCHITECTURAL DRAWING

PROJECT TITLE	DRAWING TITLE
Construction of Doksum Primary School	STAIRCASE_DETAILS

NOTES

1. ALL DIMENSIONS ARE IN MILLIMETER & ELEVATION IN METER UNLESS SPECIFIED OTHERWISE.
2. ALL DIMENSIONS MEASURE UNFINISHED SURFACES UNLESS SPECIFIED OTHERWISE.
3. DIMENSIONS ARE TO BE READ AND NOT SCALED OFF.
4. ANY DISCREPANCIES IN THE DRAWING ARE TO BE BROUGHT TO THE IMMEDIATE NOTICE OF THE SUPERVISION TEAM.

CHECKED	APPROVED	DATE	DRAWING NO.
			AR_11
		MARCH, 2026	SCALE
			NTS

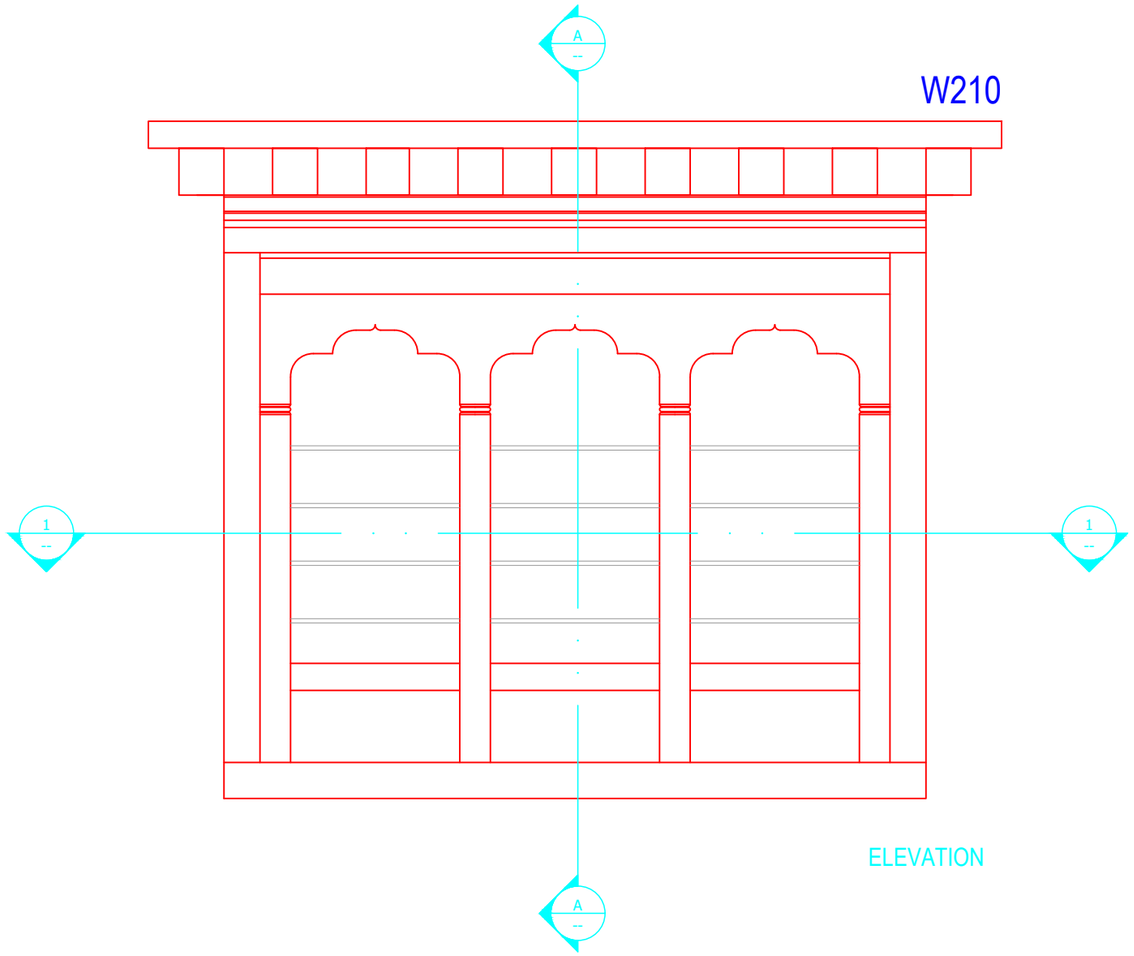

ELEVATION

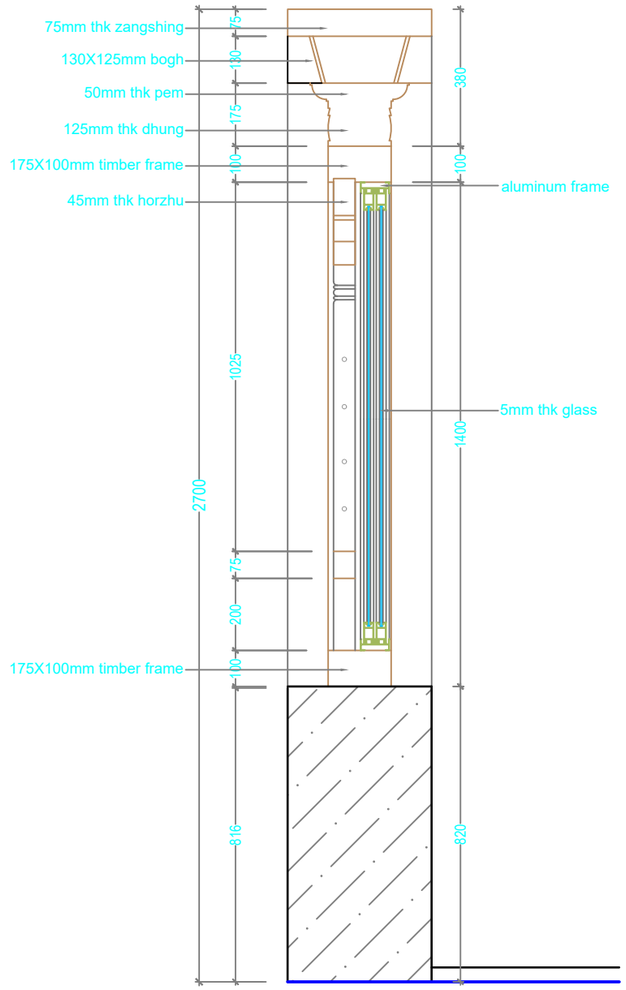

SECTION A-A

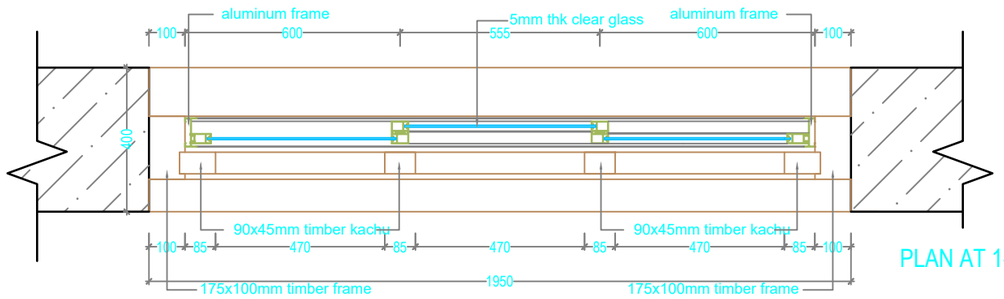

PLAN AT 1-1

Khorlochhu

ARCHITECTURAL DRAWING

PROJECT TITLE	DRAWING TITLE
Construction of Doksum Primary School	WINDOW_DETAILS

NOTES

1. ALL DIMENSIONS ARE IN MILLIMETER & ELEVATION IN METER UNLESS SPECIFIED OTHERWISE.
2. ALL DIMENSIONS MEASURE UNFINISHED SURFACES UNLESS SPECIFIED OTHERWISE.
3. DIMENSIONS ARE TO BE READ AND NOT SCALED OFF.
4. ANY DISCREPANCIES IN THE DRAWING ARE TO BE BROUGHT TO THE IMMEDIATE NOTICE OF THE SUPERVISION TEAM.

CHECKED	APPROVED	DATE	DRAWING NO.
			AR_12
		MARCH, 2026	SCALE
			NTS

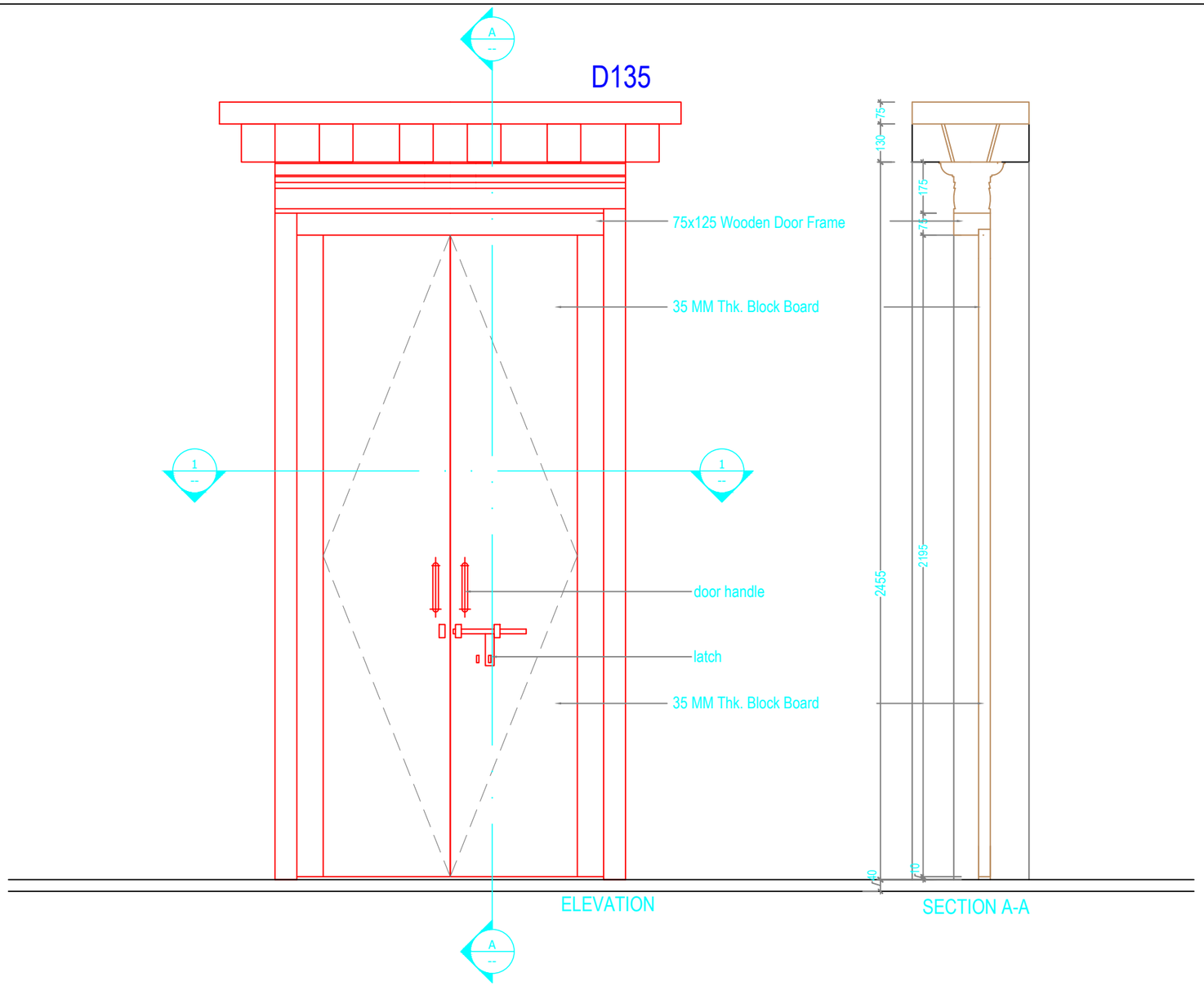

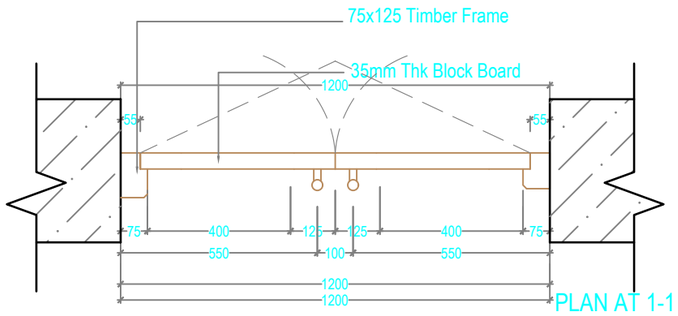

Khorlochhu

ARCHITECTURAL DRAWING

PROJECT TITLE	DRAWING TITLE
Construction of Doksum Primary School	DOOR_DETAILS

NOTES

1. ALL DIMENSIONS ARE IN MILLIMETER & ELEVATION IN METER UNLESS SPECIFIED OTHERWISE.
2. ALL DIMENSIONS MEASURE UNFINISHED SURFACES UNLESS SPECIFIED OTHERWISE.
3. DIMENSIONS ARE TO BE READ AND NOT SCALED OFF.
4. ANY DISCREPANCIES IN THE DRAWING ARE TO BE BROUGHT TO THE IMMEDIATE NOTICE OF THE SUPERVISION TEAM.

CHECKED	APPROVED	DATE	DRAWING NO.
			AR_13
		MARCH, 2026	SCALE
			NTS

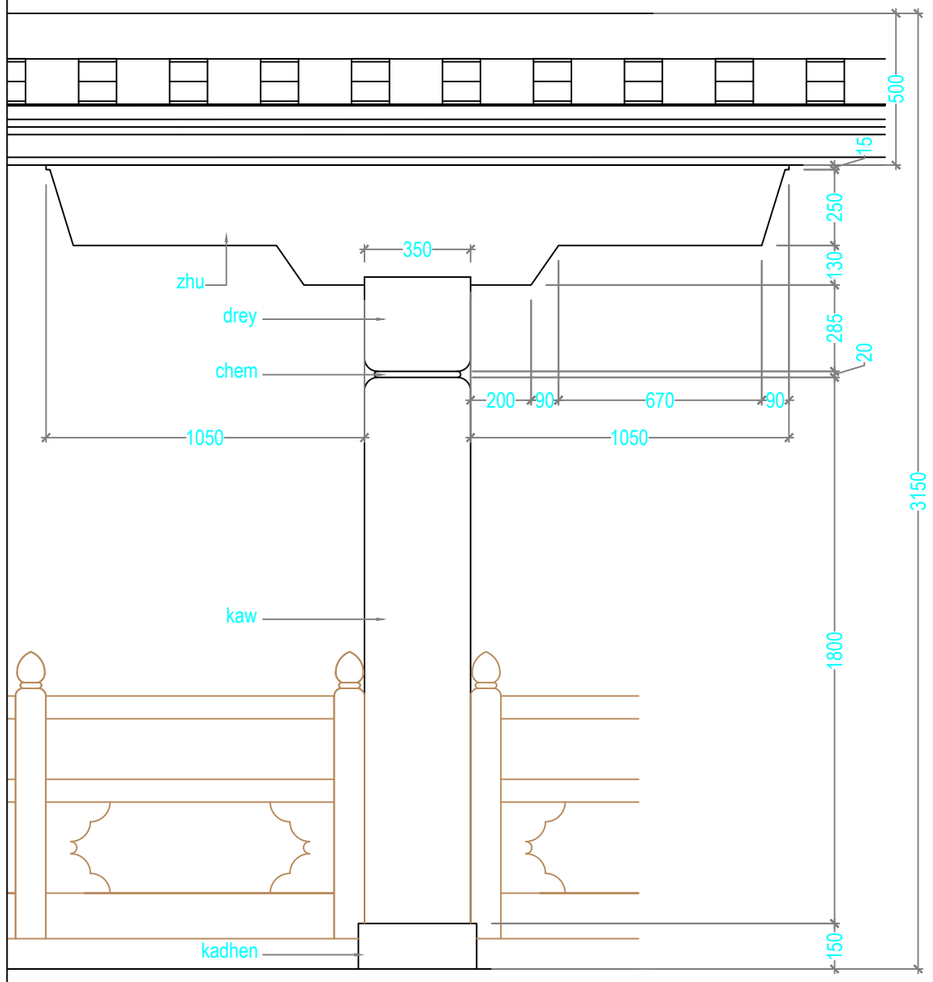

GROUND_FLOOR_KACHEN

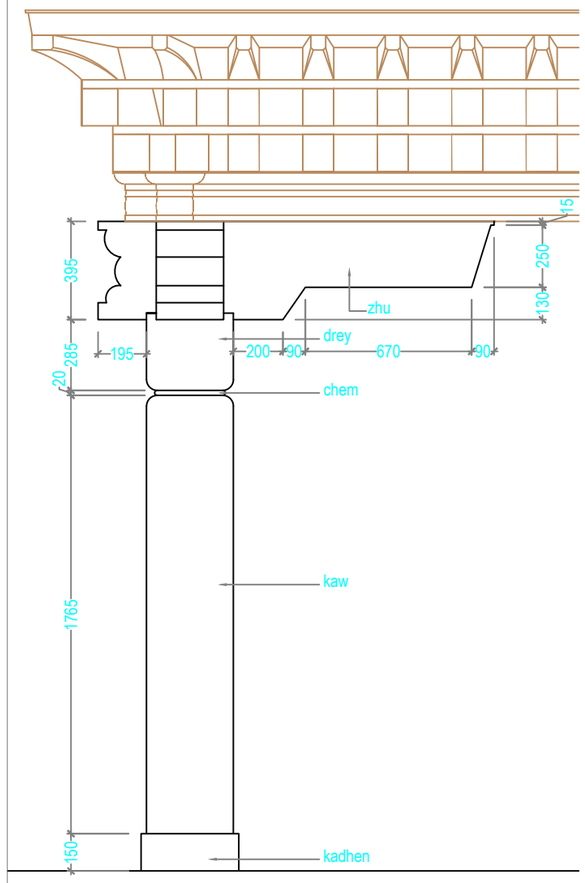

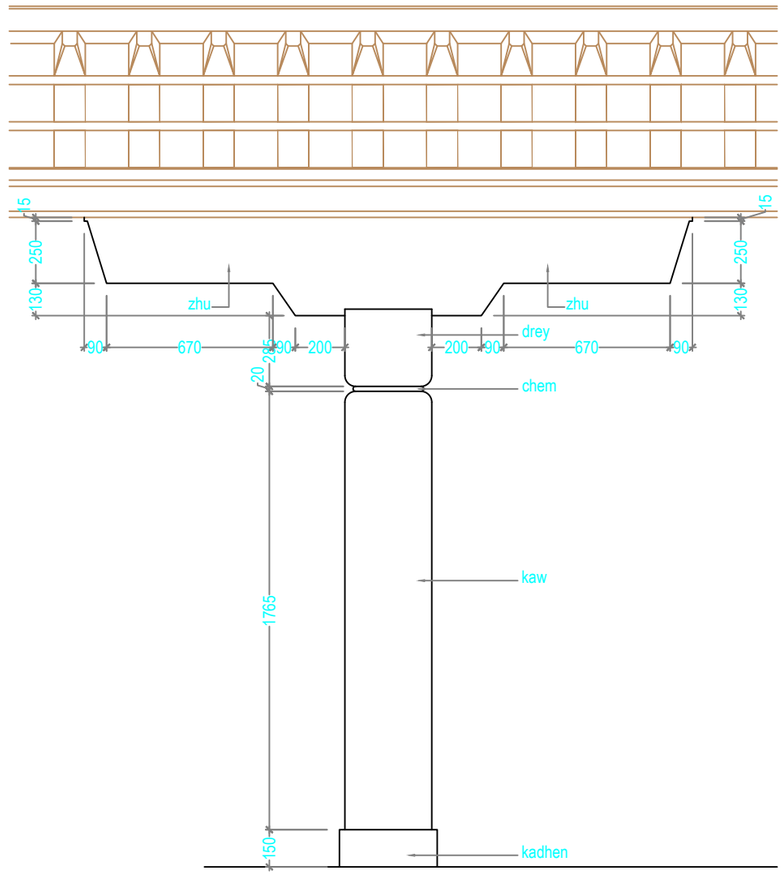

FIRST_FLOOR_KACHEN

Khorlochhu

ARCHITECTURAL DRAWING

PROJECT TITLE	DRAWING TITLE
Construction of Doksum Primary School	KACHEN_DETAILS

NOTES

1. ALL DIMENSIONS ARE IN MILLIMETER & ELEVATION IN METER UNLESS SPECIFIED OTHERWISE.
2. ALL DIMENSIONS MEASURE UNFINISHED SURFACES UNLESS SPECIFIED OTHERWISE.
3. DIMENSIONS ARE TO BE READ AND NOT SCALED OFF.
4. ANY DISCREPANCIES IN THE DRAWING ARE TO BE BROUGHT TO THE IMMEDIATE NOTICE OF THE SUPERVISION TEAM.

CHECKED	APPROVED	DATE	DRAWING NO.
			AR_13
		MARCH, 2026	SCALE
			NTS

STRUCTURAL DRAWINGS

ACADEMIC BLOCK

Owner - Khorlochhu Hydro Power Limited
Location - Doksum New Township, Trashiyangtse

Khorlochhu

GENERAL NOTES FOR STRUCTURAL DRAWINGS.

A. GENERAL

1. STRUCTURAL DRAWINGS SHALL BE READ IN CONJUNCTION WITH ARCHITECTURAL DRAWINGS AND OTHER ENGINEERS' DRAWINGS AND SPECIFICATIONS AND SUCH OTHER WRITTEN INSTRUCTIONS MAY BE ISSUED.
2. ALL DIMENSIONS ARE IN MM AND RELATIVE LEVEL IN M UNLESS STATED OTHERWISE.
3. DIMENSIONS SHALL NOT BE SCALED FROM THE DRAWINGS.
4. DESIGN CONFORMS TO:
   (a). IS 4326:1993 EARTHQUAKE RESISTANT DESIGN AND CONSTRUCTION OF BUILDINGS.
   (b). IS 456:2000 CODE OF PRACTICE FOR PLAIN & REINFORCED CONCRETE.
   (c). IS13920:1993 DUCTILE DETAILING OF REINFORCED CONCRETE STRUCTURES SUBJECTED TO SEISMIC FORCES.
   (d).BUILDING CODE OF BHUTAN 2003
   (e). IS1893:2002 SEISMIC RESISTANT DESIGN OF STRUCTURES.
   (f). IS 800, SP 38 (S&T)-1987
5. VERIFY ALL SETTING OUT DIMENSIONS WITH ENGINEER/ARCHITECT.
6. REFER ANY DISCREPANCY TO ENGINEER/ARCHITECT BEFORE PROCEEDING THE WORK.
7. ALL CONSTRUCTION MATERIALS AND WORKMANSHIP SHALL COMPLY WITH THE SPECIFICATIONS FOR BUILDING AND ROAD WORKS TOGETHER WITH THE REQUIREMENTS OF ALL RELEVANT CODES OF PRACTICE REFERRED TO HEREIN AND THE REQUIREMENTS OF ALL STATUTORY AUTHORITIES.
8. ALWAYS REFER ADDITIONAL NOTES PROVIDED IN THE DRAWINGS.

B. FOUNDATIONS AND FOOTINGS.

1. FOOTINGS ARE DESIGNED FOR AN ALLOWABLE BEARING CAPACITY OF 180 KN/Sq M. VERIFY THE SOIL STRENGTH AND OBTAIN APPROVAL FROM THE ENGINEER BEFORE PLACING THE CONCRETE.
2. WALLS SHALL BE PROVIDED BELOW THE EXTERIOR PLINTH BEAM. IT IS RECOMMENDED TO PROVIDE THE SAME BELOW THE INTERNAL PLINTH BEAM.
3. FOOTINGS ARE DESIGNED CONSIDERING THE MINIMUM DEPTH OF 1500MM BELOW THE ORIGINAL GROUND LEVEL. NOTIFY ENGINEER SHOULD THE DEPTH OF FOOTINGS REQUIRED TO BE PROVIDED IS MORE THAN THE DEPTH SPECIFIED ABOVE.
4. ALL CONCRETE SHALL BE PLACED 'IN THE DRY' FOR FOUNDATIONS.
5. COMPACTION OF FOUNDATION SHALL BE APPROVED BY ENGINEER PRIOR TO PLACEMENT OF CONCRETE.

C. LOADING

1. THIS STRUCTURE HAS BEEN DESIGNED FOR THE FOLLOWING LOADS.
   (a). DEAD LOADS;

UNIT WEIGHT OF CONCRETE BLOCK BRICK	16.79KN/M3
UNIT WEIGHT OF RCC	25KN/M3
UNIT WEIGHT OF PCC	24KN/M3
UNIT WEIGHT OF STONE	28KN/M3

   (b). SUPERIMPOSED (LIVE LOADS)

GROUND FLOOR	3KN/M2
SUPERIMPOSED (LIVE LOADS)	
Ground Floor & 1st Floor	3KN/M2
LIVE LOAD FOR ROOF FLOORS	0.75KN/M2
LIVE LOAD FOR STAIRCASE	4KN/M2

   (c). WIND LOAD

WIND PRESSURE	45.6M/S (AS CALCULATED)

   (d). OTHER LOADS:
   EARTHQUAKE LOAD IN ACCORDANCE WITH IS 1893:2002 ASSUMING ZONE V
   SUPERIMPOSED DEAD LOAD 1KN/M2
2. MAINTAIN STRUCTURE IN STABLE CONDITION DURING CONSTRUCTION.
3. DO NOT PLACE OR STORE BUILDING MATERIALS ON CONCRETE MEMBERS WITHOUT ENGINEER'S APPROVAL.

D. CONCRETE.

1. CONCRETE QUALITY SHALL COMPLY WITH IS 456:2000
2. PROJECT ASSESSMENT OF CONCRETE STRENGTH IS REQUIRED.
3. GRADE OF CONCRETE IS M20 FOR ALL RCC WORKS. (1:1.5:3=1 cement:1.5 Sand: 3 Aggregates)
4. FOR THE ABOVE GRADE TO BE ACHIEVED, MAXIMUM FREE WATER-CEMENT RATIO SHALL BE 0.55, MINIMUM CEMENT CONTENT SHALL BE 300KG/M3 AND MAXIMUM AMOUNT OF WATER SHALL BE 180L.
5. WATER USED FOR MIXING AND CURING SHALL COMPLY WITH CLAUSE 5.4 OF IS 456:2000.

6. MECHANICALLY VIBRATE CONCRETE IN THE FORM TO GIVE MAXIMUM COMPACTION WITHOUT SEGREGATION OF THE CONCRETE.
7. CURE CONCRETE AS REQUIRED BY THE CLAUSE 13.5 OF IS456:2000 AND WORK SPECIFICATIONS.
8. CONCRETE SIZES AS DRAWN ARE MINIMUM AND DO NOT INCLUDE APPLIED FINISHES.
9. DO NOT MAKE UNSPECIFIED HOLES OR CHASES WITHOUT ENGINEER'S APPROVAL.
10. DO NOT PLACE CONDUITS, PIPES AND THE LIKE WITHIN COVER CONCRETE.
11. AGGREGATES SHALL COMPLY WITH CLAUSE 5.3 OF IS456:2000. NOMINAL SIZE OF COARSE AGGREGATES SHALL BE 20MM.
12. THE CHARACTERISTICS STRENGTH OF CONCRETE AT 28 DAYS SHALL BE 20MPA. NOTE THAT THE MEAN COMPRESSIVE STRENGTH OBTAINED FROM THE LABORATORY HAS TO BE WELL ABOVE THIS VALUE.
13. ALL FORMWORKS FOR BEAMS AND SLABS ARE TO REMOVED BEFORE CONSTRUCTION OF WALLS OR OTHER PERMANENT LOADINGS. ALL FORMWORK AND ITS REMOVAL MUST BE IN ACCORDANCE TO IS 456:2000.

E. REINFORCEMENT.

1. GRADE OF STEEL USED FOR RCC WORKS SHALL BE FE500.
2. BAR NOTATION GIVES THE FOLLOWING INFORMATION IN THIS ORDER: NUMBER OF BARS BAR SIZE(MM),SPACING(MM, IF REQUIRED).
3. REINFORCEMENT IS REPRESENTED DIAGRAMMATICALLY AND NOT NECESSARILY IN TRUE PROJECTION.
4. LAP REINFORCEMENT ONLY AT LOCATIONS SHOWN IN THE DRAWINGS. LAP LENGTH SHALL COMPLY WITH IS456:2000. LAP SPLICES SHALL NOT BE LESS THAN THE DEVELOPMENT LENGTH IN TENSION(GENERALLY 57Ø).
5. REINFORCEMENT SHALL NOT BE CUT, BENT OR HEATED ON SITE WITHOUT ENGINEER'S APPROVAL.
6. THE DEVIATION OF REINFORCEMENT FROM ITS SPECIFIED POSITION SHALL NOT EXCEED THE FOLLOWING(MM)
   (a). TOLERANCE FOR COVER -0,+10MM. WHERE A NEGATIVE VALUE INDICATE A DECREASE IN SPECIFIED COVER, AND POSITIVE VALUE INDICATES AN INCREASE IN COVER.
   (b). TOLERANCE ON PLACEMENT OF REINFORCEMENT.
   FOR SLABS AND STAIRCASE -10,+10MM.
   FOR BEAMS, COLUMNS AND FOUNDATION -15,+15MM.
7. SPACERS AND SUPPORTS SHALL BE LOCATED AT CENTERS CLOSE ENOUGH (PREFERABLY NOT EXCEEDING 750MM C/C FOR COLUMN AND BEAM REINFORCEMENT AND 450MM FOR SLAB REINFORCEMENT). TO PREVENT DISPLACEMENT OF REINFORCEMENT BY WORKMEN OR EQUIPMENT DURING FIXING AND SUBSEQUENT CONCRETE PLACEMENT WITHIN TOLERANCE GIVEN ABOVE.
8. THE COVER TO THE REINFORCEMENT NEAREST THE CONCRETE SURFACE SHALL NOT LESS THAN THE FOLLOWING EXCEPT WHERE SPECIFIED OTHERWISE:

BEAMS	30MM
COLUMNS	40MM
FLOOR SLABS AND STAIRCASE	20MM
FOUNDATION	50MM

9. BENDING OF REINFORCEMENT IN BEAMS AND COLUMNS SHALL COMPLY WITH THE REQUIREMENTS OF IS 456:2000
10. FORMWORK SHALL COMPLY WITH CLAUSE 11 OF IS 456:2000
11. STRIPPING OF FORMWORK SHALL COMPLY WITH CLAUSE 11.3 OF IS:456:2000

F. WELDING AND BOLTING.

1. WELDING TO BE CARRIED OUT IN ACCORDANCE WITH IS 816:1969, IS 819:1957, IS 1024:1979, IS 1261:1959, IS 1323:1982 AND IS: 9595: 1980 AS APPROPRIATE.
2. THE STRENGTH OF ELECTRODE USED FOR WELDING SHALL BE EQUAL TO OR GREATER THAN THE STRENGTH OF MEMBER THAT IS BEING WELDED.
3. ALL WELD SHALL BE COMPLETE PENETRATION BUTT WELD.
4. ALL BOLTS SHALL BE HIGH STRENGTH FRICTION GRIP GALVANIZED M16 AND M20 IN ACCORDANCE WITH IS 3757:1967 AND IS 800: 1984.
5. ALL MEMBERS OF STEEL TRUSS SHALL BE DRY AND THOROUGHLY CLEANED FROM ALL LOOSE SCALE AND RUST PRIOR TO PAINTING.
6. THE MEMBERS SHALL BE PROVIDED WITH COAT OF ZINC COATING.

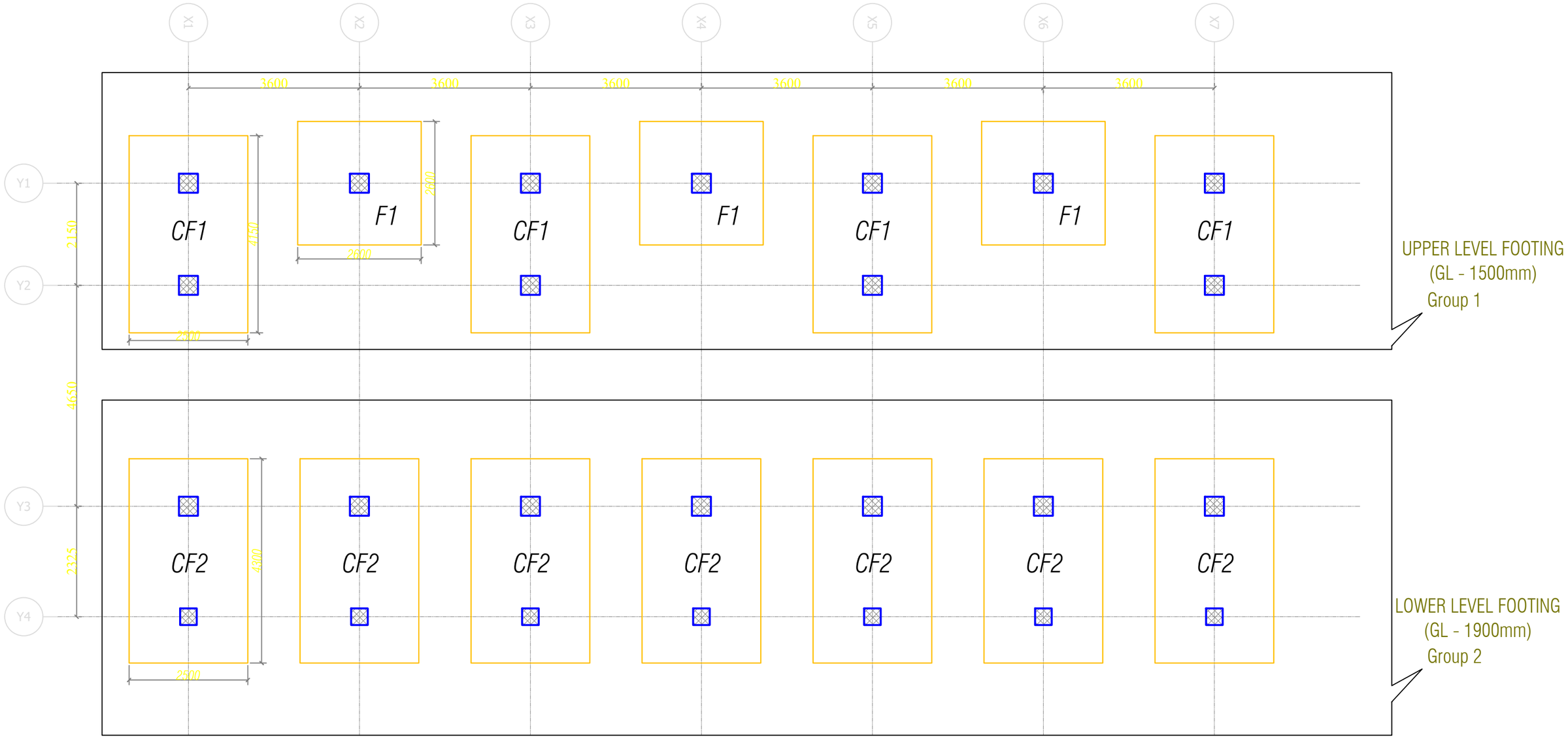

Footing Layout Plan

Khorlochhu

STRUCTURAL DRAWING

PROJECT TITLE	DRAWING TITLE
Construction of Doksum Primary School	FOOTING_PLAN_LAYOUT

NOTES

1. ALL DIMENSIONS ARE IN MILLIMETER & ELEVATION IN METER UNLESS SPECIFIED OTHERWISE.
2. ALL DIMENSIONS MEASURE UNFINISHED SURFACES UNLESS SPECIFIED OTHERWISE.
3. DIMENSIONS ARE TO BE READ AND NOT SCALED OFF.
4. ANY DISCREPANCIES IN THE DRAWING ARE TO BE BROUGHT TO THE IMMEDIATE NOTICE OF THE SUPERVISION TEAM.

CHECKED	APPROVED	DATE	DRAWING NO.
			STR_03
		MARCH, 2026	SCALE
			NTS

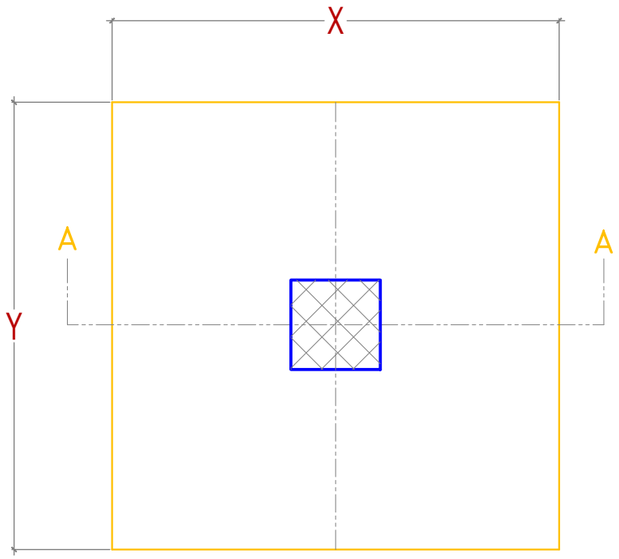

Typical Footing Plan

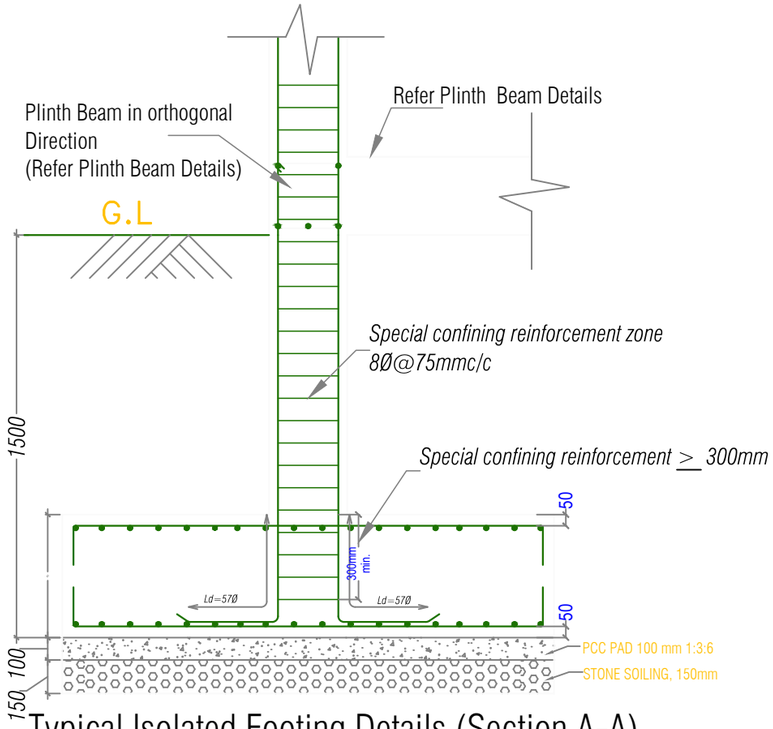

Typical Isolated Footing Details (Section A-A)
FOR GROUP 1 FOOTINGS

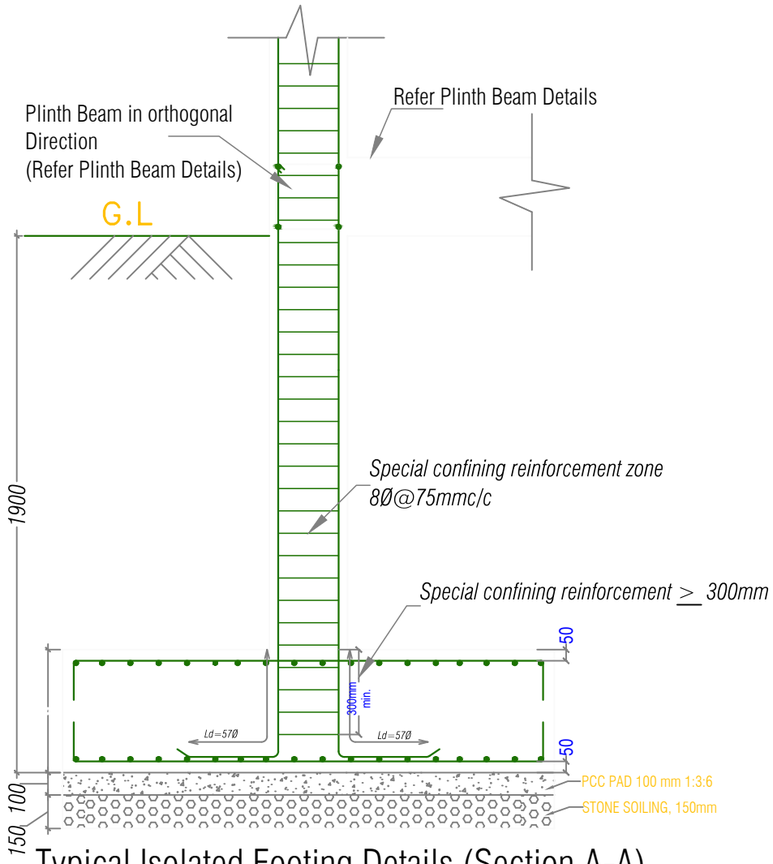

Typical Isolated Footing Details (Section A-A)
FOR GROUP 2 FOOTINGS

		FOOTING SCHEDULE			
Footing Type	Size (X x Y)	Column Size (X x Y)	D	RFT BAR IN Bottom (Bothways)	RFT BAR IN Top (Bothways)
F1	2600 x 2600	400 x 400	350	12Ø@ 225 c/c	12Ø@ 310c/c

Isolated Footing Details

Khorlochhu

STRUCTURAL DRAWING		NOTES	CHECKED	APPROVED	DATE	DRAWING NO.
PROJECT TITLE	DRAWING TITLE	1. ALL DIMENSIONS ARE IN MILLIMETER & ELEVATION IN METER UNLESS SPECIFIED OTHERWISE. 2. ALL DIMENSIONS MEASURE UNFINISHED SURFACES UNLESS SPECIFIED OTHERWISE. 3. DIMENSIONS ARE TO BE READ AND NOT SCALED OFF. 4. ANY DISCREPANCIES IN THE DRAWING ARE TO BE BROUGHT TO THE IMMEDIATE NOTICE OF THE SUPERVISION TEAM.				STR_04
Construction of Doksum Primary School	FOOTING_DETAILS				MARCH, 2026	SCALE NTS

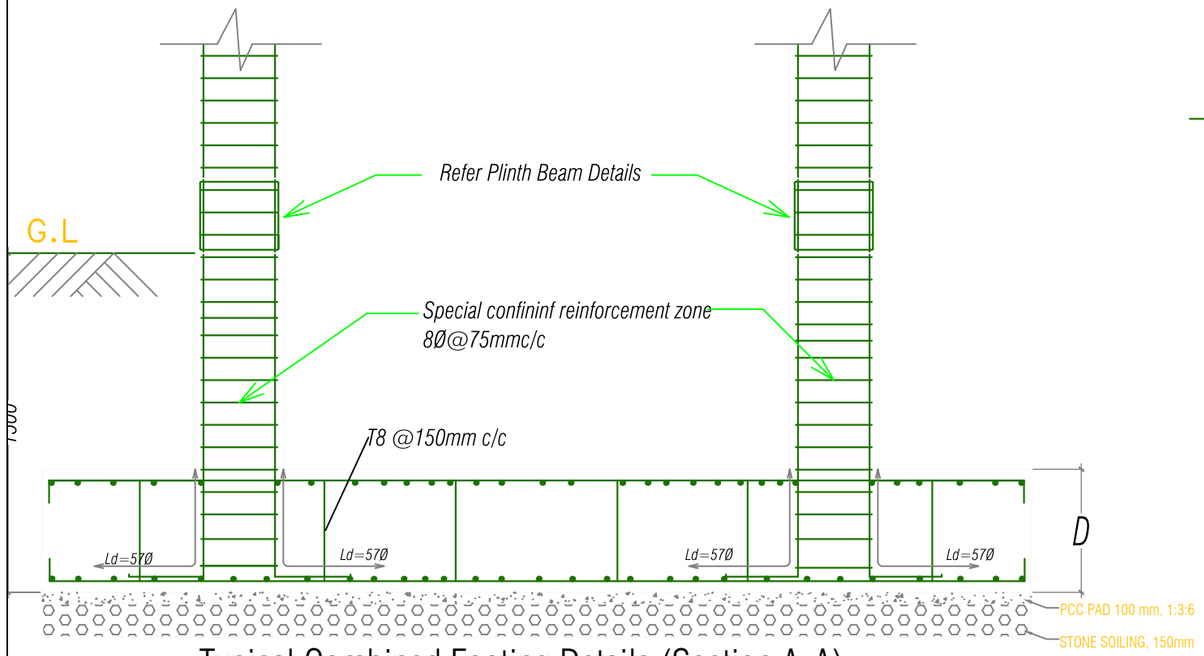

Typical Combined Footing Details (Section A-A)
FOR GROUP 1 FOOTINGS

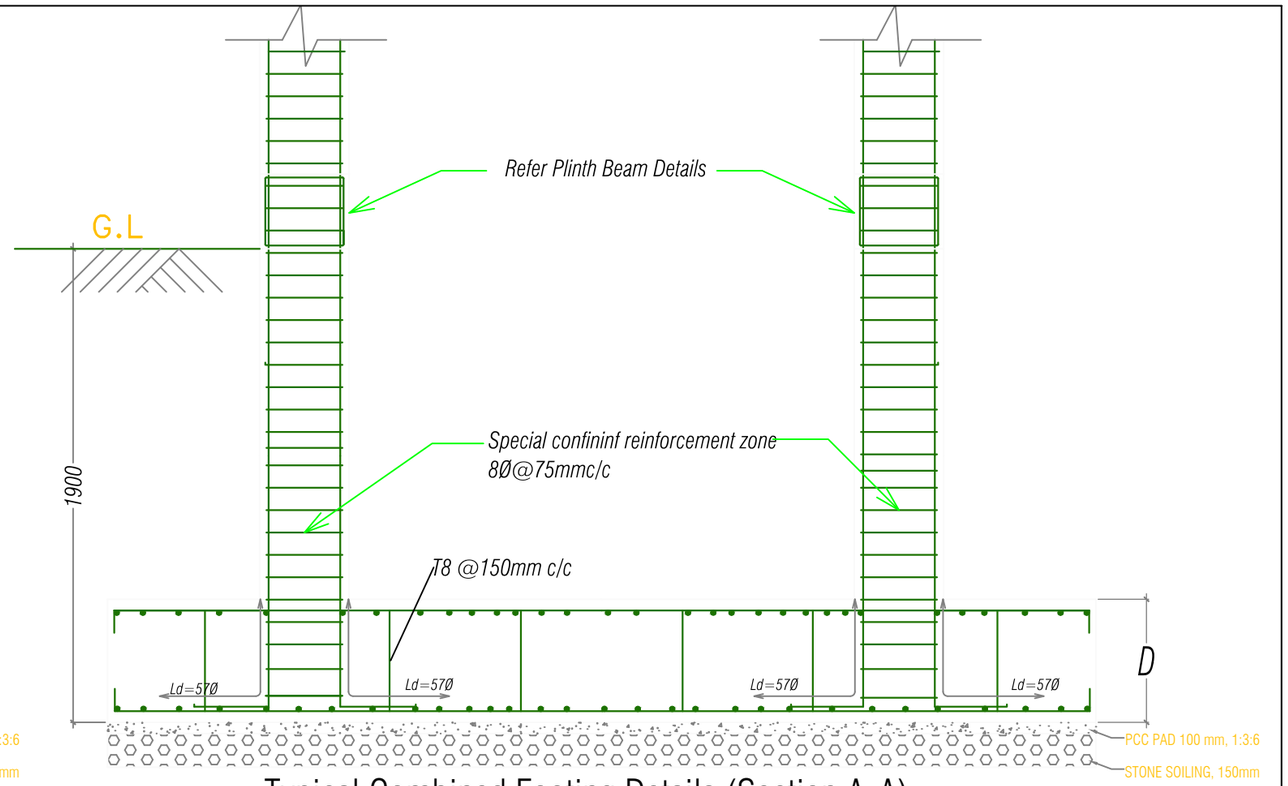

Typical Combined Footing Details (Section A-A)
FOR GROUP 2 FOOTINGS

		FOOTING SCHEDULE			
Footing Type	Size (X x Y)	Column Size (X x Y)	D	RFT BAR IN Bottom (Bothways)	RFT BAR IN Top (Bothways)
CF1	2500 x 4150	400 x 400	500	12Ø@ 180 c/c	12Ø@ 210c/c
CF2	2500 x 4300	400 x 400	500	12Ø@ 165 c/c	12Ø@ 200c/c

Combined Footing Details

Khorlochhu

STRUCTURAL DRAWING

PROJECT TITLE	DRAWING TITLE
Construction of Doksum Primary School	FOOTING_DETAILS

NOTES

1. ALL DIMENSIONS ARE IN MILLIMETER & ELEVATION IN METER UNLESS SPECIFIED OTHERWISE.
2. ALL DIMENSIONS MEASURE UNFINISHED SURFACES UNLESS SPECIFIED OTHERWISE.
3. DIMENSIONS ARE TO BE READ AND NOT SCALED OFF.
4. ANY DISCREPANCIES IN THE DRAWING ARE TO BE BROUGHT TO THE IMMEDIATE NOTICE OF THE SUPERVISION TEAM.

CHECKED	APPROVED	DATE	DRAWING NO.
			STR_05
		MARCH, 2026	SCALE
			NTS

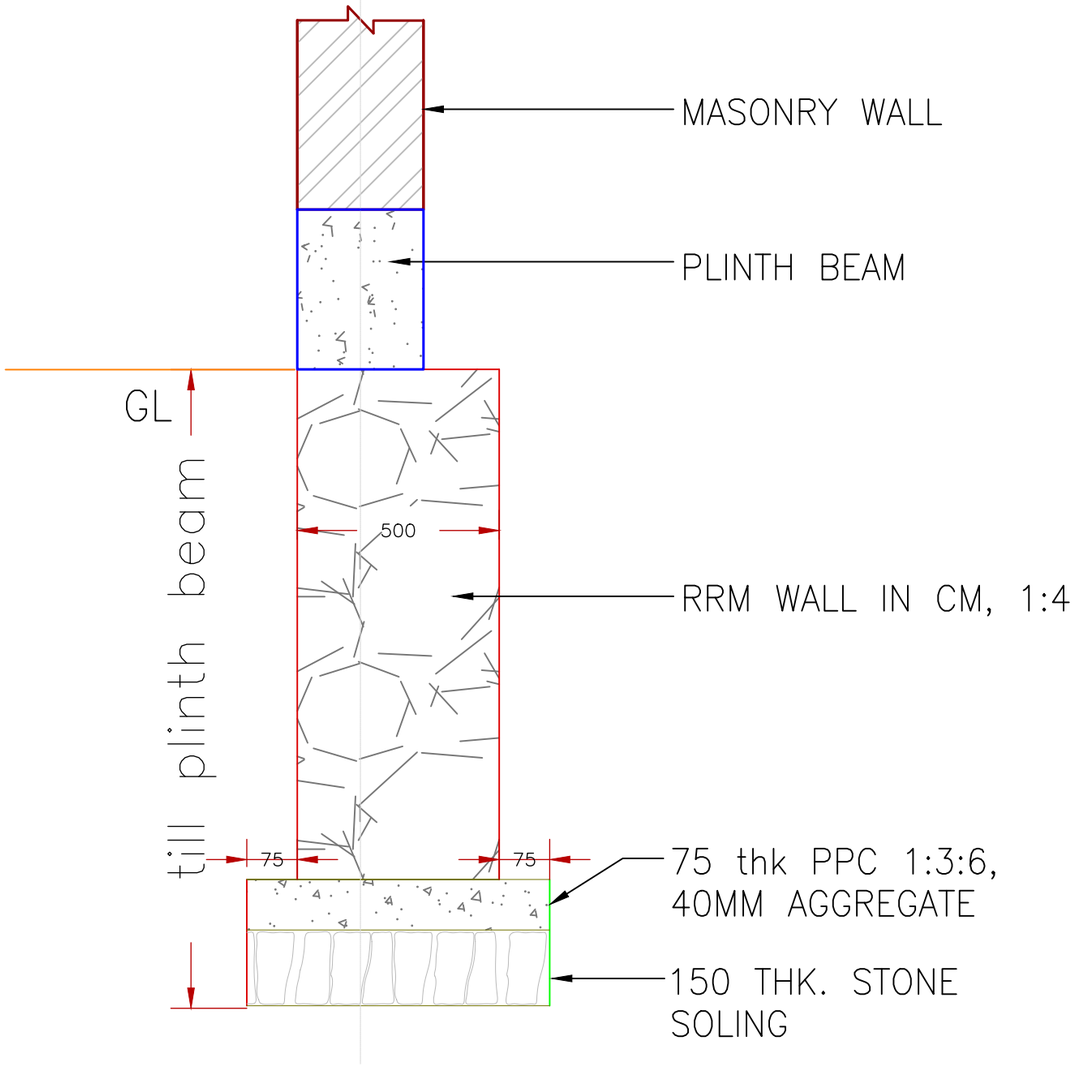

RRM WALL BELOW EXTERNAL PLINTH BEAM

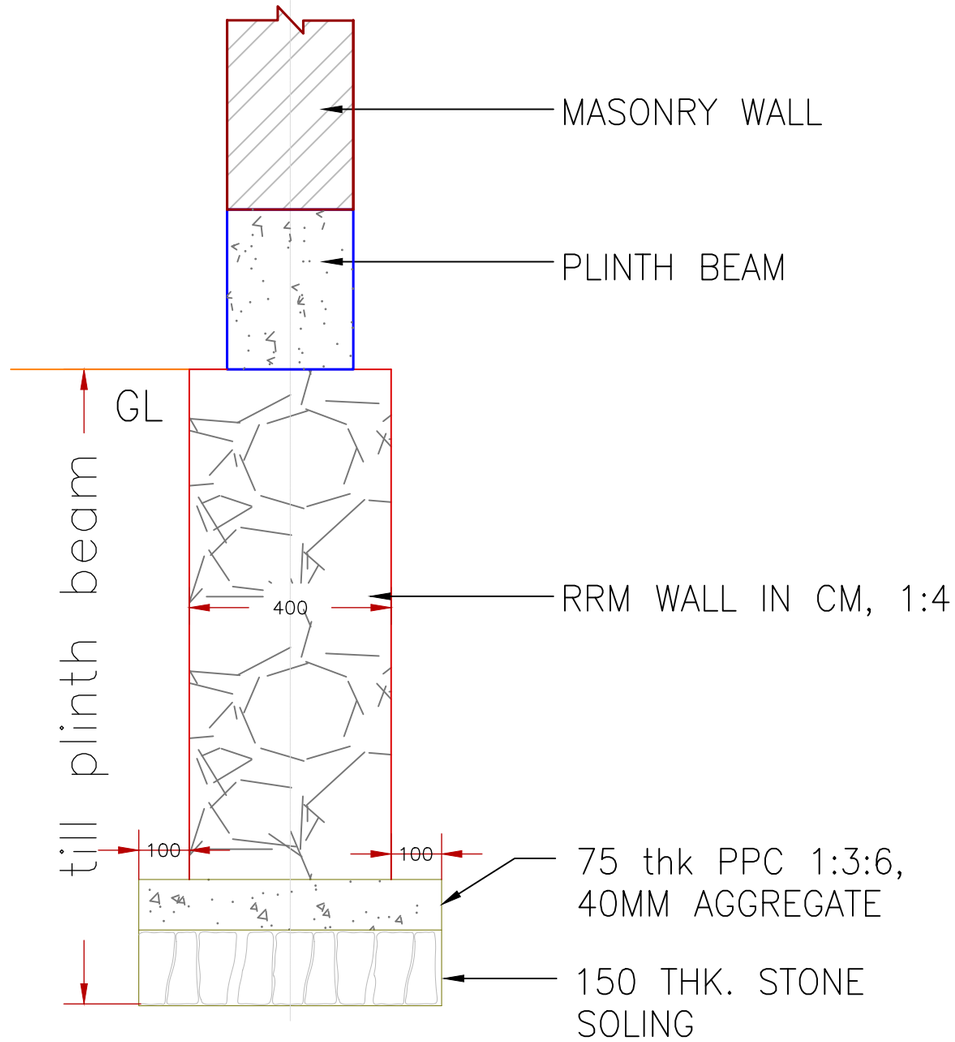

RRM WALL BELOW INTERNAL PLINTH BEAM

TYPICAL FOUNDATION WALL DETAILS

Khorlochhu	STRUCTURAL DRAWING	NOTES	CHECKED	APPROVED	DATE	DRAWING NO.
	PROJECT TITLE: Construction of Doksum Primary School	DRAWING TITLE: RRM_WALL_DETAILS				STR_06
		1. ALL DIMENSIONS ARE IN MILLIMETER & ELEVATION IN METER UNLESS SPECIFIED OTHERWISE. 2. ALL DIMENSIONS MEASURE UNFINISHED SURFACES UNLESS SPECIFIED OTHERWISE. 3. DIMENSIONS ARE TO BE READ AND NOT SCALED OFF. 4. ANY DISCREPANCIES IN THE DRAWING ARE TO BE BROUGHT TO THE IMMEDIATE NOTICE OF THE SUPERVISION TEAM.			MARCH, 2026	SCALE: NTS

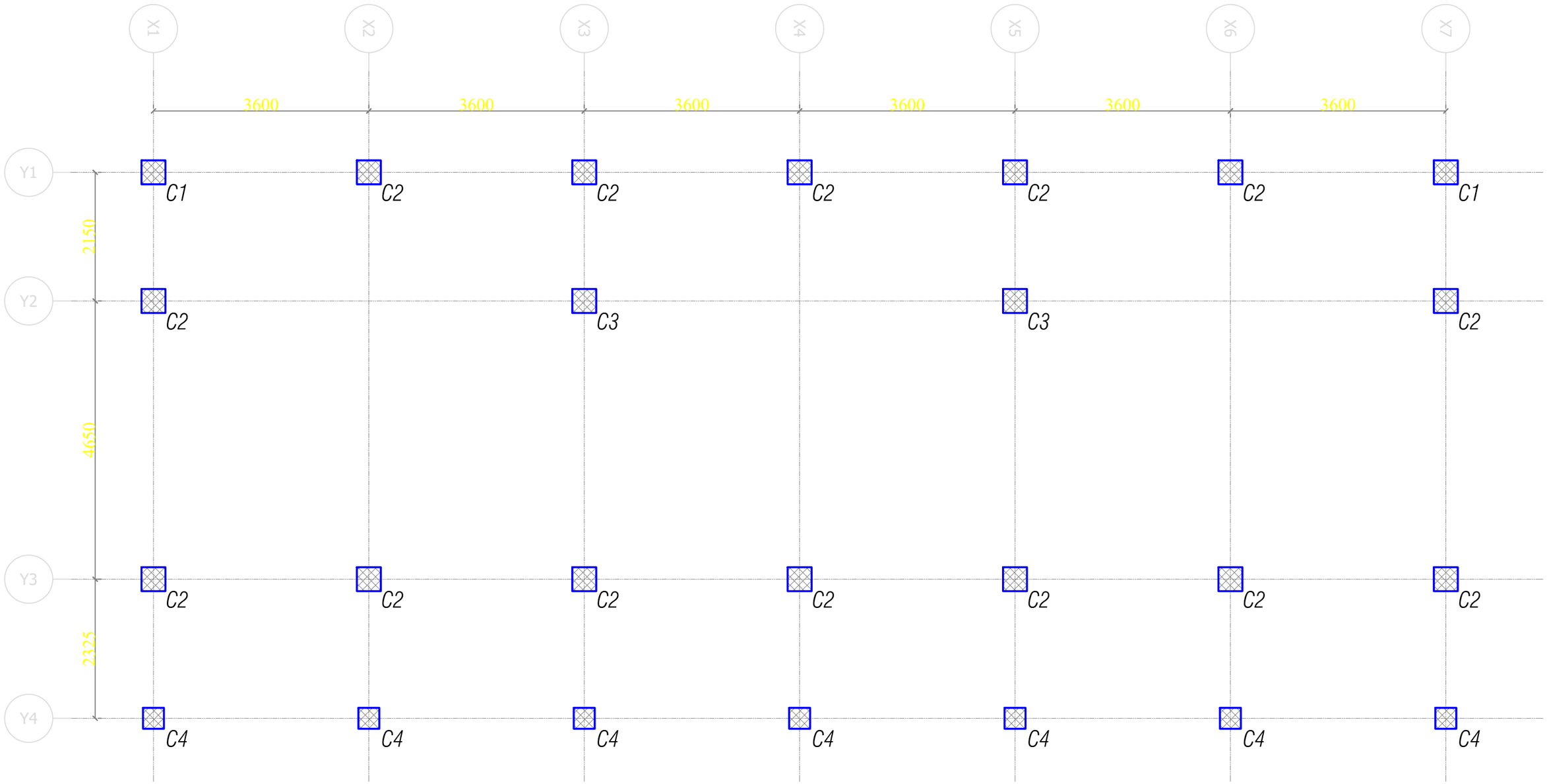

Column Layout Plan

Khorlochhu

STRUCTURAL DRAWING

PROJECT TITLE	DRAWING TITLE
Construction of Doksum Primary School	COLUMN_LAYOUT_PLAN

NOTES

1. ALL DIMENSIONS ARE IN MILLIMETER & ELEVATION IN METER UNLESS SPECIFIED OTHERWISE.
2. ALL DIMENSIONS MEASURE UNFINISHED SURFACES UNLESS SPECIFIED OTHERWISE.
3. DIMENSIONS ARE TO BE READ AND NOT SCALED OFF.
4. ANY DISCREPANCIES IN THE DRAWING ARE TO BE BROUGHT TO THE IMMEDIATE NOTICE OF THE SUPERVISION TEAM.

CHECKED	APPROVED	DATE	DRAWING NO.
			STR_07
		MARCH, 2026	SCALE
			NTS

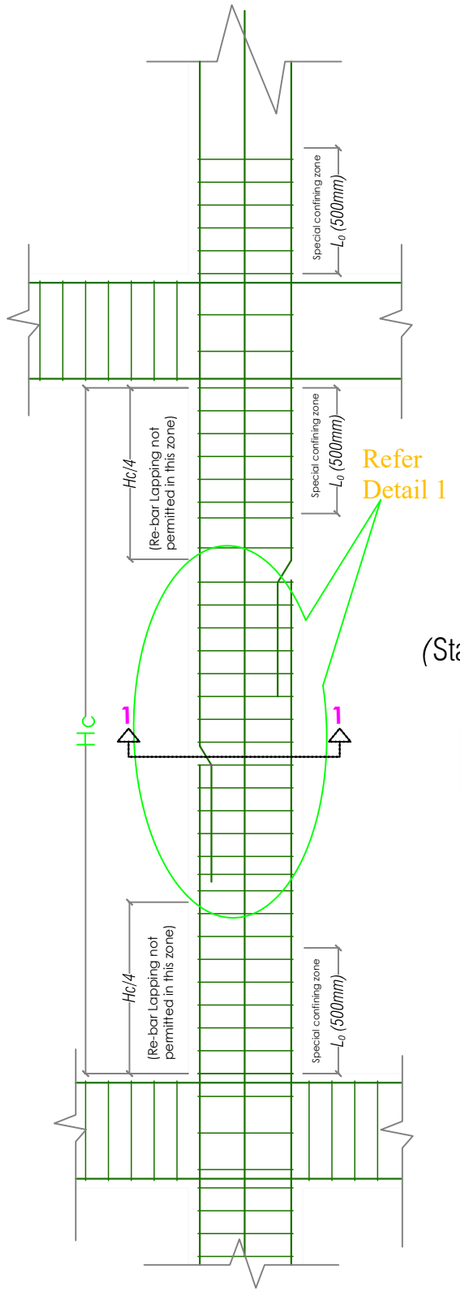

TYPICAL COLUMN SECTION
SHOWING TYPICAL ARRANGEMENT OF REBAR
AND TIES

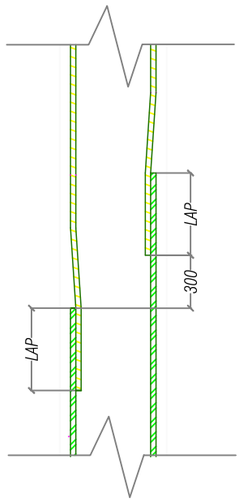

DETAIL 1
(Staggering of laps in columns)

Bar Dia.	Splice Length
16Ø	912
20Ø	1140

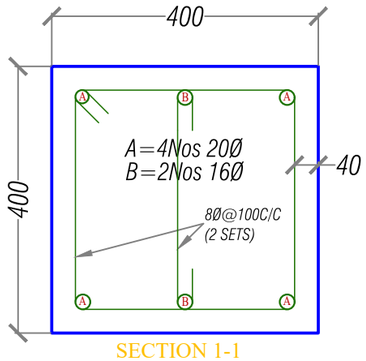

SECTION 1-1
(All columns shown as C1)

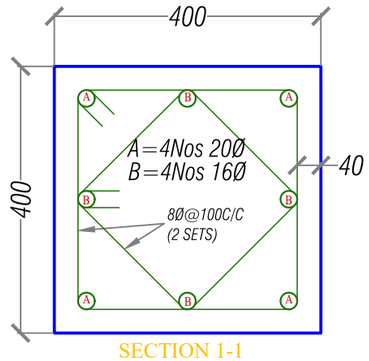

SECTION 1-1
(All columns shown as C2)

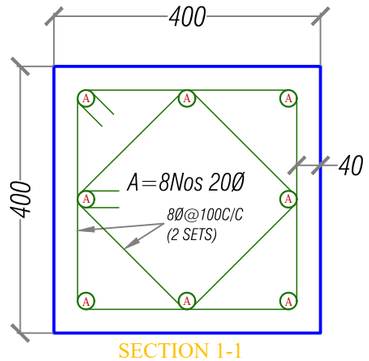

SECTION 1-1
(All columns shown as C3)

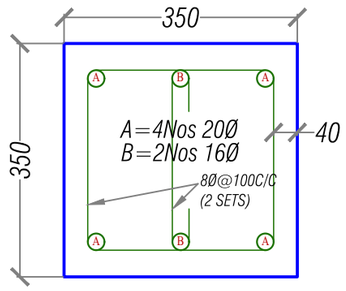

SECTION 1-1
(All columns shown as C4)

Khorlochhu

STRUCTURAL DRAWING

PROJECT TITLE	DRAWING TITLE
Construction of Doksum Primary School	COLUMN_DETAILS

NOTES

1. ALL DIMENSIONS ARE IN MILLIMETER & ELEVATION IN METER UNLESS SPECIFIED OTHERWISE.
2. ALL DIMENSIONS MEASURE UNFINISHED SURFACES UNLESS SPECIFIED OTHERWISE.
3. DIMENSIONS ARE TO BE READ AND NOT SCALED OFF.
4. ANY DISCREPANCIES IN THE DRAWING ARE TO BE BROUGHT TO THE IMMEDIATE NOTICE OF THE SUPERVISION TEAM.

CHECKED	APPROVED	DATE	DRAWING NO.
			STR_08
		MARCH, 2026	SCALE
			NTS

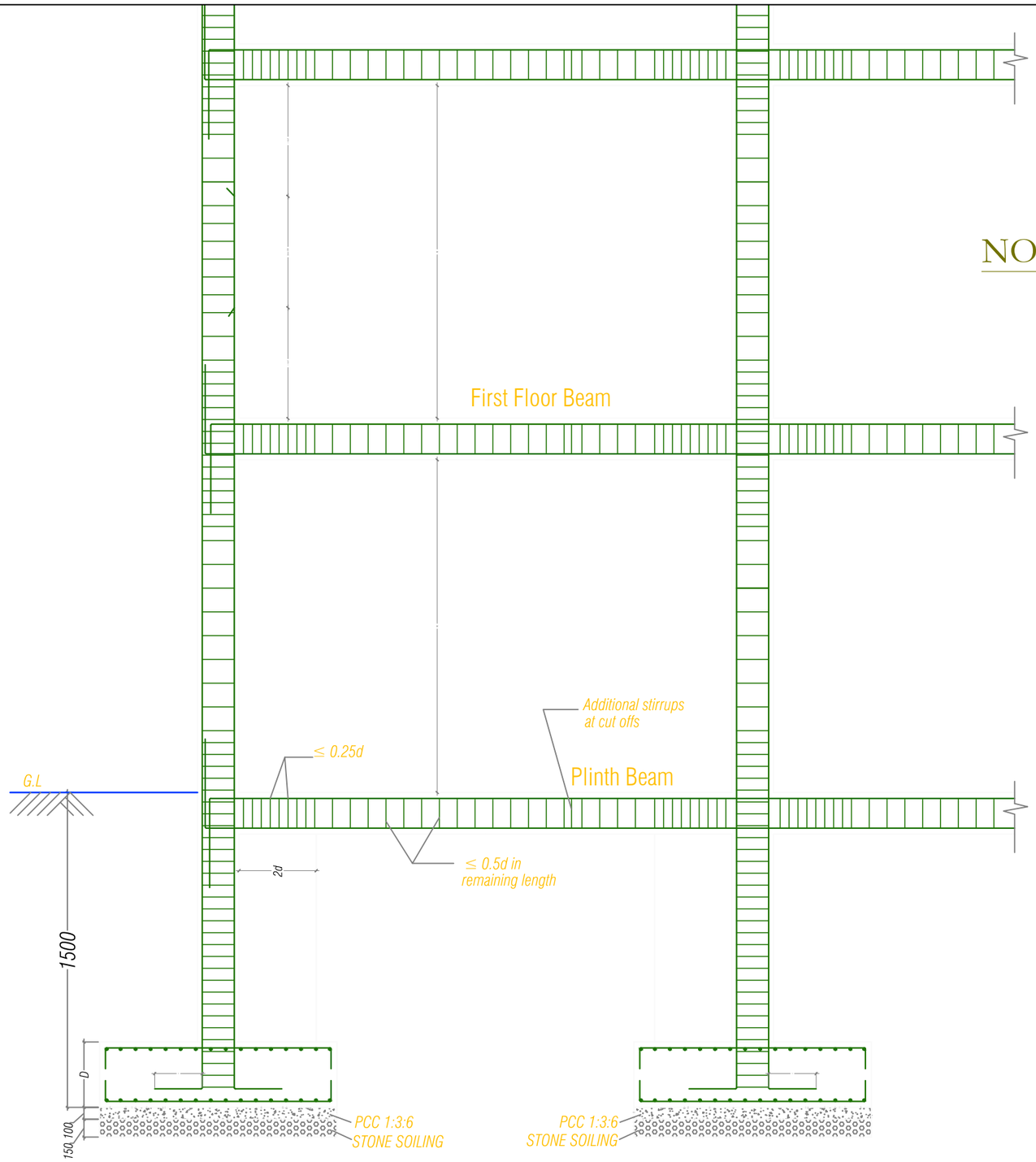

Beam - Column Junction Details

NOTE:

Clear Cover Details:

1. The clear cover to all footings should be 50 mm
2. The clear cover to all columns should be 40 mm
3. The clear cover to all beams should be 30 mm
4. The clear cover to all slabs should be 25 mm

Reinforcement Details

1. Not more than 50% of bars shall be spliced at one section both in beams and columns.
2. Column bars shall be spliced at a distance of Hc/4 from the face of support
3. No lap splice in columns are provided in first storey
4. Top bars in the beam shall splice at midspan while bottom bars shall be spliced at a distance of 2d from the face of the column but not at mid span
5. Full length of splice stirrups in ties in column shall be 8Ø @ 100mm c/c
6. The column encasing the stair case shall be provide with special confining reinforcement 8Ø @ 75mm c/c throughout the height of column

Khorlochhu	STRUCTURAL DRAWING		NOTES	CHECKED	APPROVED	DATE	DRAWING NO.
	PROJECT TITLE	DRAWING TITLE	1. ALL DIMENSIONS ARE IN MILLIMETER & ELEVATION IN METER UNLESS SPECIFIED OTHERWISE. 2. ALL DIMENSIONS MEASURE UNFINISHED SURFACES UNLESS SPECIFIED OTHERWISE. 3. DIMENSIONS ARE TO BE READ AND NOT SCALED OFF. 4. ANY DISCREPANCIES IN THE DRAWING ARE TO BE BROUGHT TO THE IMMEDIATE NOTICE OF THE SUPERVISION TEAM.				STR_09
	Construction of Doksum Primary School	COLUMN_BEAM_JUNCTION_DETAILS				MARCH, 2026	SCALE NTS

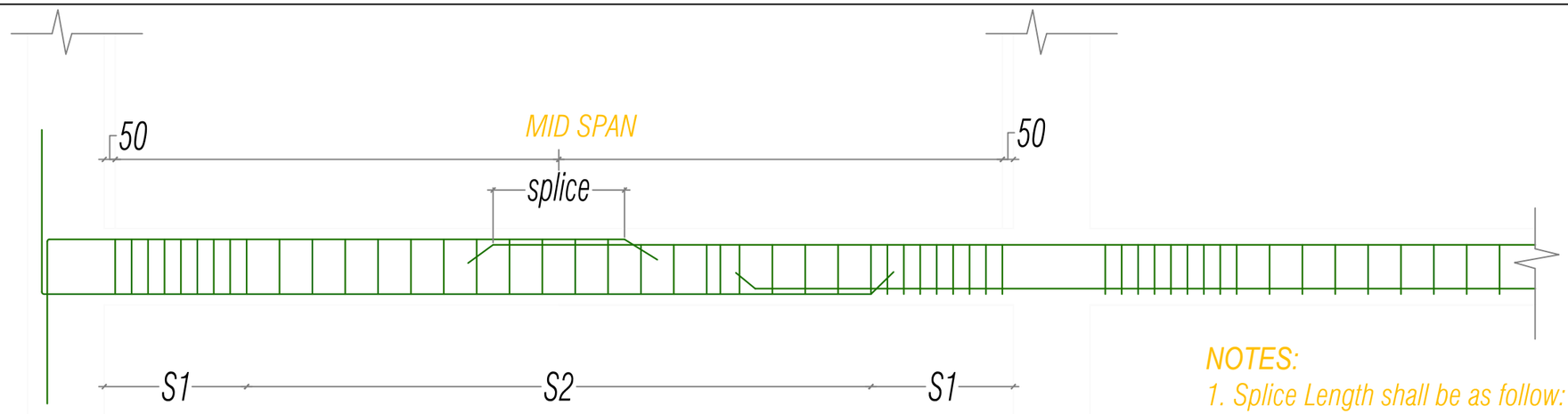

TYPICAL SPLICE DETAILS OF BEAMS

NOTES:

1. Splice Length shall be as follow:

25 Ø = 1175
20 Ø = 940
16 Ø = 752

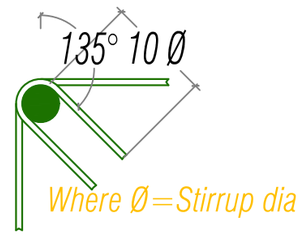

DETAILS AT - B

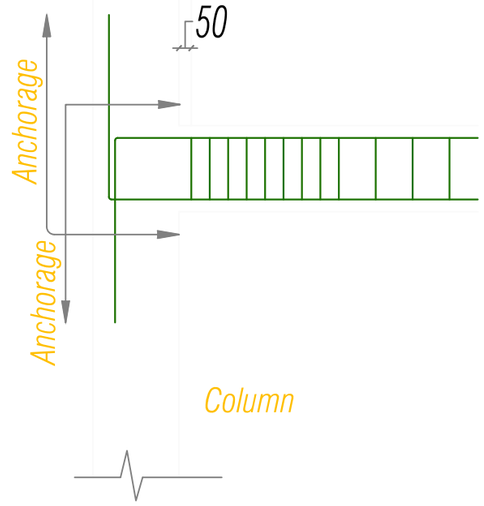

ANCHORAGE

DETAILS AT - A

Bar Anchorage Length

(Minimum Length = 57Ø)

16 Ø = 912
20 Ø = 1140
25 Ø = 1425

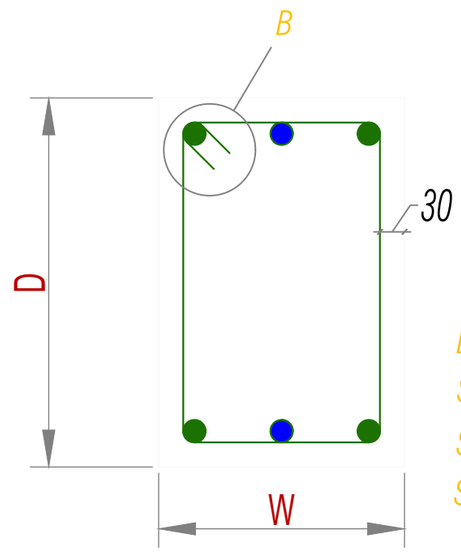

BEAM STIRRUPS DETAILS

Stirrups in the Beams

Location	: Stirrups provided
S1	: 8Ø@100c/c
S2	: 8Ø@150c/c
Splice	: 8Ø@100c/c

Typical Floor Beam Details

Khorlochhu

STRUCTURAL DRAWING		NOTES	CHECKED	APPROVED	DATE	DRAWING NO.
PROJECT TITLE	DRAWING TITLE	1. ALL DIMENSIONS ARE IN MILLIMETER & ELEVATION IN METER UNLESS SPECIFIED OTHERWISE. 2. ALL DIMENSIONS MEASURE UNFINISHED SURFACES UNLESS SPECIFIED OTHERWISE. 3. DIMENSIONS ARE TO BE READ AND NOT SCALED OFF. 4. ANY DISCREPANCIES IN THE DRAWING ARE TO BE BROUGHT TO THE IMMEDIATE NOTICE OF THE SUPERVISION TEAM.				STR_10
Construction of Doksum Primary School	TYPICAL_FLOOR_BEAM_DETAILS				MARCH, 2026	SCALE NTS

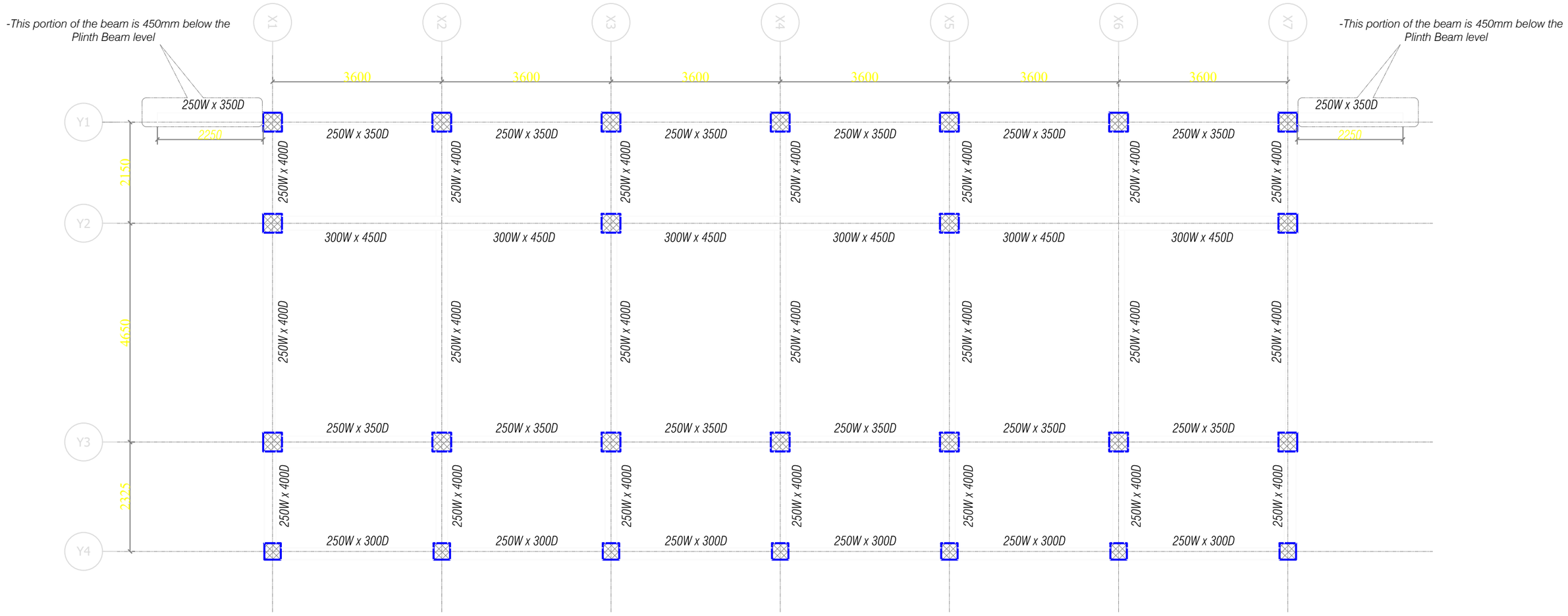

Plinth Beam Layout Plan

Khorlochhu

STRUCTURAL DRAWING

PROJECT TITLE	DRAWING TITLE
Construction of Doksum Primary School	PLINTH_BEAM_LAYOUT_PLAN

NOTES

1. ALL DIMENSIONS ARE IN MILLIMETER & ELEVATION IN METER UNLESS SPECIFIED OTHERWISE.
2. ALL DIMENSIONS MEASURE UNFINISHED SURFACES UNLESS SPECIFIED OTHERWISE.
3. DIMENSIONS ARE TO BE READ AND NOT SCALED OFF.
4. ANY DISCREPANCIES IN THE DRAWING ARE TO BE BROUGHT TO THE IMMEDIATE NOTICE OF THE SUPERVISION TEAM.

CHECKED	APPROVED	DATE	DRAWING NO.
			STR_11
		MARCH, 2026	SCALE
			NTS

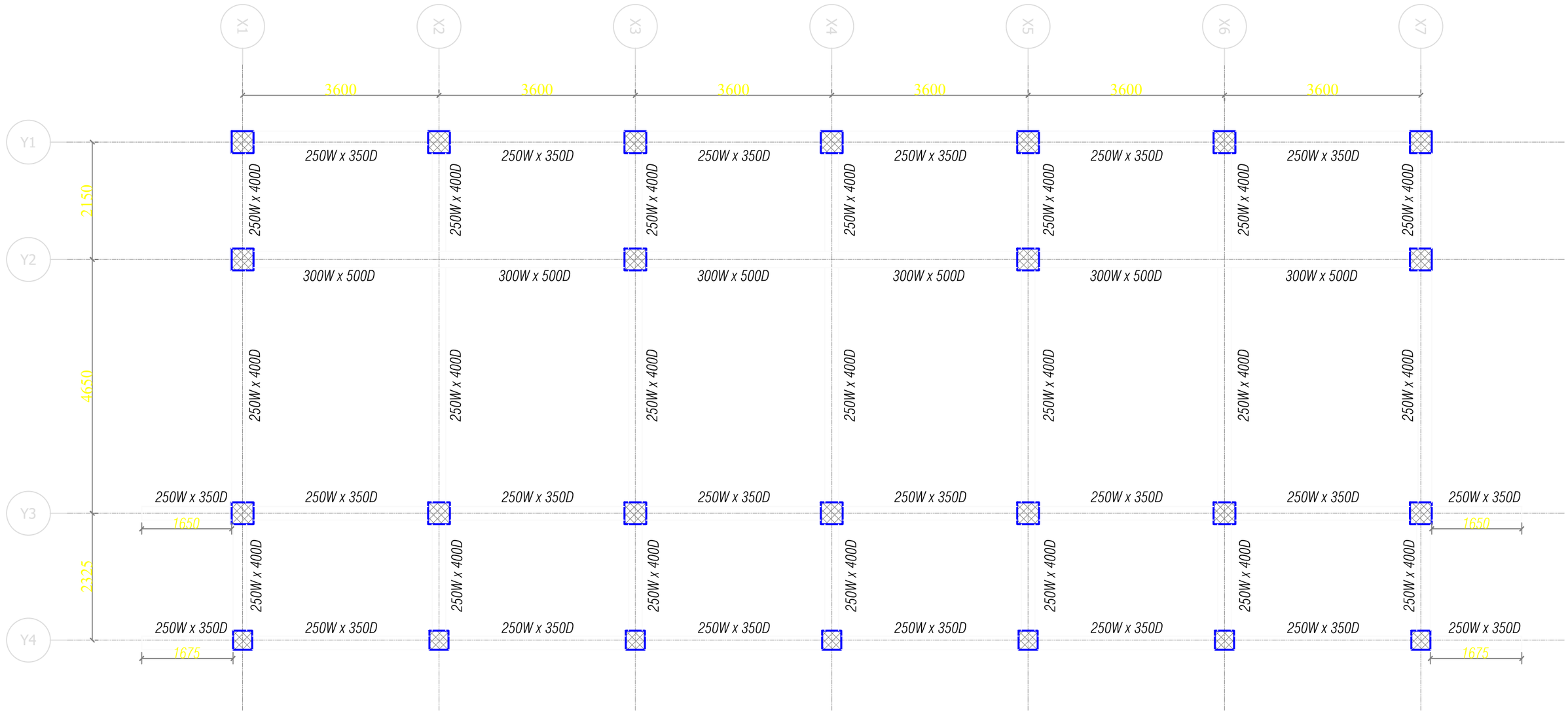

First Floor Beam Layout Plan

Khorlochhu	**STRUCTURAL DRAWING**	**NOTES**	**CHECKED**	**APPROVED**	**DATE**	**DRAWING NO.**
	PROJECT TITLE / **DRAWING TITLE**	1. ALL DIMENSIONS ARE IN MILLIMETER & ELEVATION IN METER UNLESS SPECIFIED OTHERWISE. 2. ALL DIMENSIONS MEASURE UNFINISHED SURFACES UNLESS SPECIFIED OTHERWISE. 3. DIMENSIONS ARE TO BE READ AND NOT SCALED OFF. 4. ANY DISCREPANCIES IN THE DRAWING ARE TO BE BROUGHT TO THE IMMEDIATE NOTICE OF THE SUPERVISION TEAM.				**STR_12**
	Construction of Doksum Primary School / **FIRST_BEAM_LAYOUT_PLAN**				MARCH, 2026	**SCALE** NTS

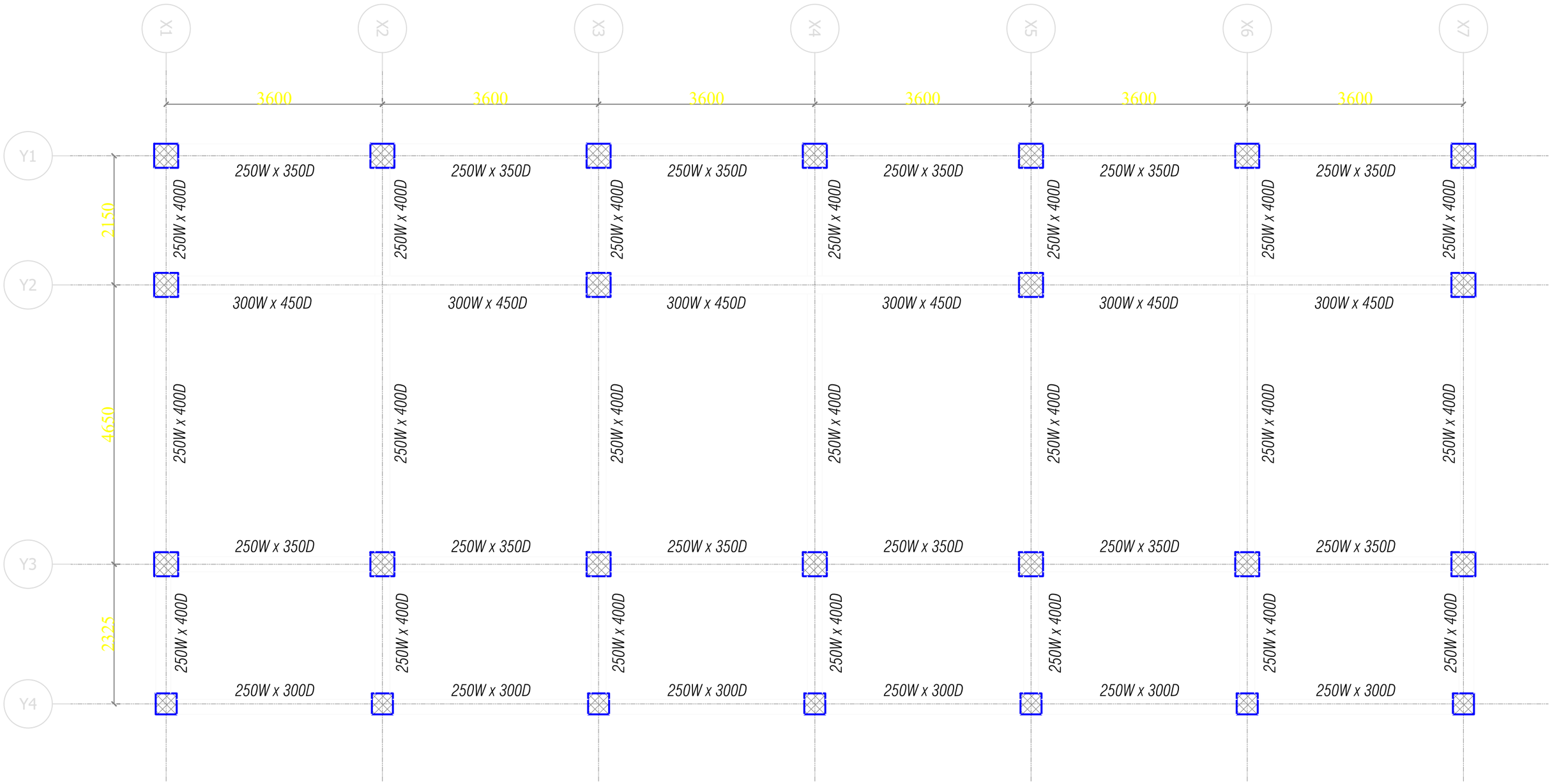

Roof Beam Layout Plan

Khorlochhu

STRUCTURAL DRAWING

PROJECT TITLE	DRAWING TITLE
Construction of Doksum Primary School	ROOF_BEAM_LAYOUT_PLAN

NOTES

1. ALL DIMENSIONS ARE IN MILLIMETER & ELEVATION IN METER UNLESS SPECIFIED OTHERWISE.
2. ALL DIMENSIONS MEASURE UNFINISHED SURFACES UNLESS SPECIFIED OTHERWISE.
3. DIMENSIONS ARE TO BE READ AND NOT SCALED OFF.
4. ANY DISCREPANCIES IN THE DRAWING ARE TO BE BROUGHT TO THE IMMEDIATE NOTICE OF THE SUPERVISION TEAM.

CHECKED	APPROVED	DATE	DRAWING NO.
			STR_13
		MARCH, 2026	SCALE
			NTS

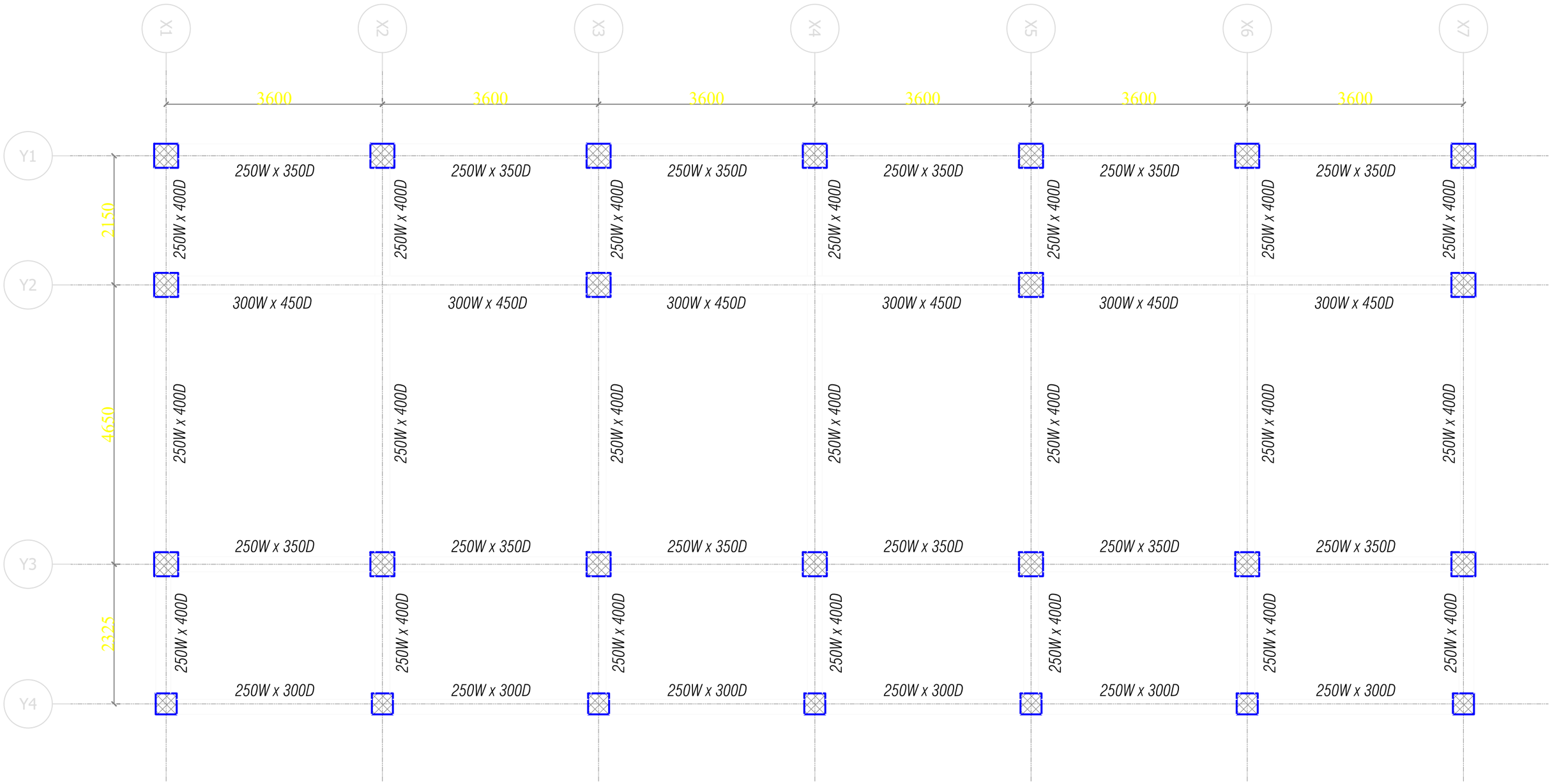

Roof Beam Layout Plan

Khorlochhu

STRUCTURAL DRAWING

PROJECT TITLE	DRAWING TITLE
Construction of Doksum Primary School	ROOF_BEAM_LAYOUT_PLAN

NOTES

1. ALL DIMENSIONS ARE IN MILLIMETER & ELEVATION IN METER UNLESS SPECIFIED OTHERWISE.
2. ALL DIMENSIONS MEASURE UNFINISHED SURFACES UNLESS SPECIFIED OTHERWISE.
3. DIMENSIONS ARE TO BE READ AND NOT SCALED OFF.
4. ANY DISCREPANCIES IN THE DRAWING ARE TO BE BROUGHT TO THE IMMEDIATE NOTICE OF THE SUPERVISION TEAM.

CHECKED	APPROVED	DATE	DRAWING NO.
			STR_14
		MARCH, 2026	SCALE
			NTS

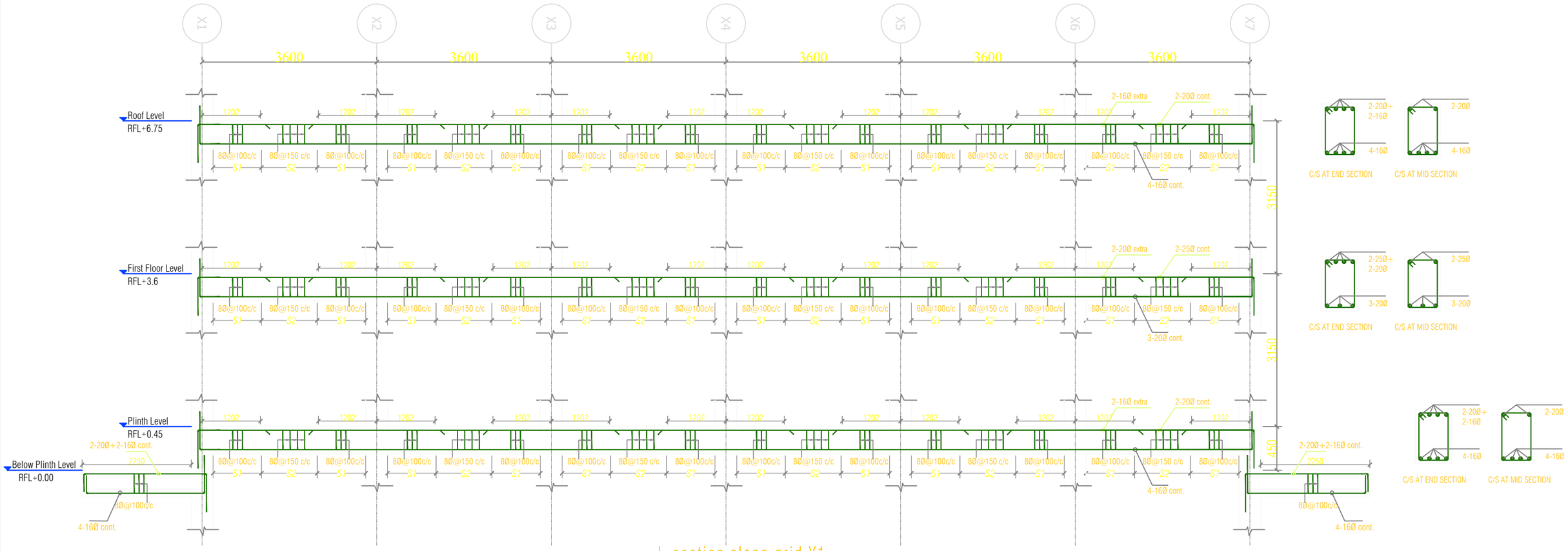

L-section along grid Y1

NOTE:
- S1=2D =8Ø @ 100 C/C (D=OVERALL DEPTH OF BEAM)
- S2=8Ø @ 150 C/C
- THE FIRST STIRRUPS IS PLACED MAXIMUM 50 MM FROM THE FACE OF COLUMN

Khorlochhu

STRUCTURAL DRAWING

PROJECT TITLE	DRAWING TITLE
Construction of Doksum Primary School	BEAM_SECTION_ALONG_FRAME_Y1

NOTES

1. ALL DIMENSIONS ARE IN MILLIMETER & ELEVATION IN METER UNLESS SPECIFIED OTHERWISE.
2. ALL DIMENSIONS MEASURE UNFINISHED SURFACES UNLESS SPECIFIED OTHERWISE.
3. DIMENSIONS ARE TO BE READ AND NOT SCALED OFF.
4. ANY DISCREPANCIES IN THE DRAWING ARE TO BE BROUGHT TO THE IMMEDIATE NOTICE OF THE SUPERVISION TEAM.

CHECKED	APPROVED	DATE	DRAWING NO.
			STR_15
		MARCH, 2026	SCALE
			NTS

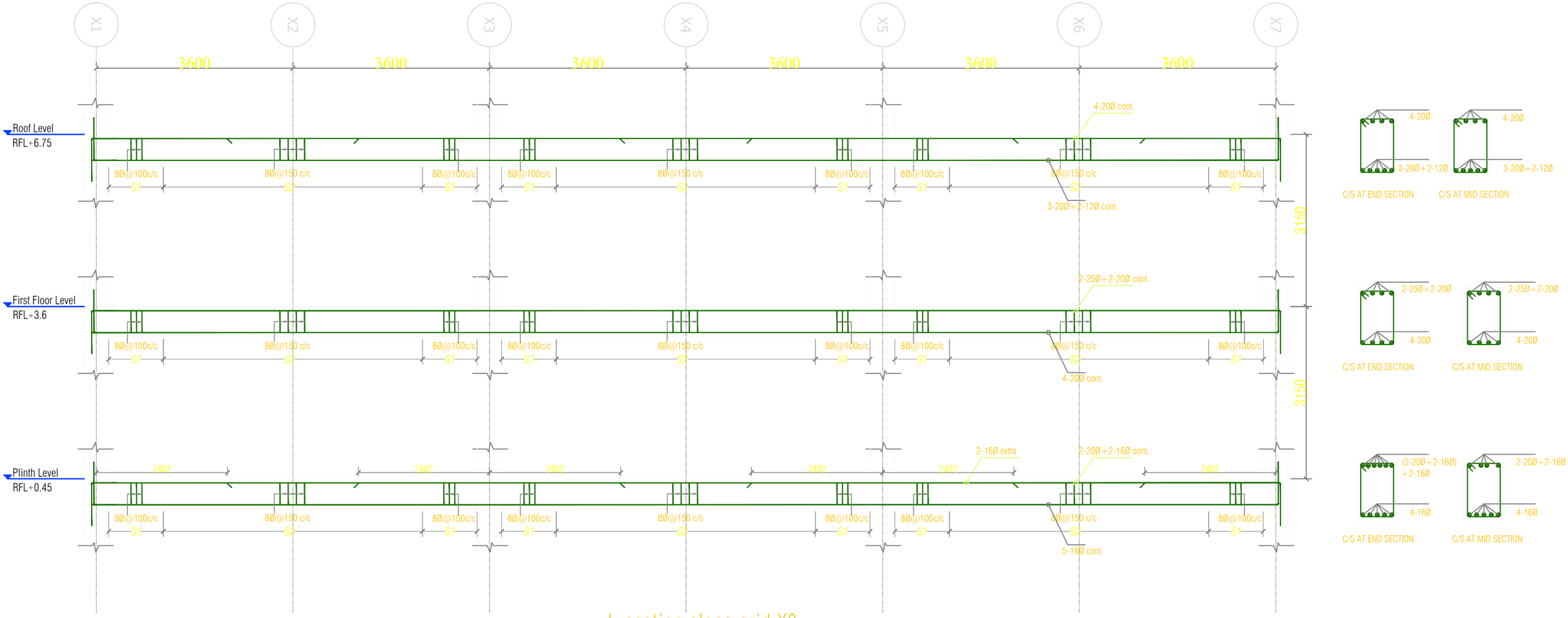

L-section along grid Y2

NOTE:
- S1=2D =8Ø @ 100 C/C (D=OVERALL DEPTH OF BEAM)
- S2=8Ø @ 150 C/C
- THE FIRST STIRRUPS IS PLACED MAXIMUM 50 MM FROM THE FACE OF COLUMN

Khorlochhu

STRUCTURAL DRAWING

PROJECT TITLE	DRAWING TITLE
Construction of Doksum Primary School	BEAM_SECTION_ALONG_Y2

NOTES

1. ALL DIMENSIONS ARE IN MILLIMETER & ELEVATION IN METER UNLESS SPECIFIED OTHERWISE.
2. ALL DIMENSIONS MEASURE UNFINISHED SURFACES UNLESS SPECIFIED OTHERWISE.
3. DIMENSIONS ARE TO BE READ AND NOT SCALED OFF.
4. ANY DISCREPANCIES IN THE DRAWING ARE TO BE BROUGHT TO THE IMMEDIATE NOTICE OF THE SUPERVISION TEAM.

CHECKED	APPROVED	DATE	DRAWING NO.
			STR_16
		MARCH, 2026	SCALE
			NTS

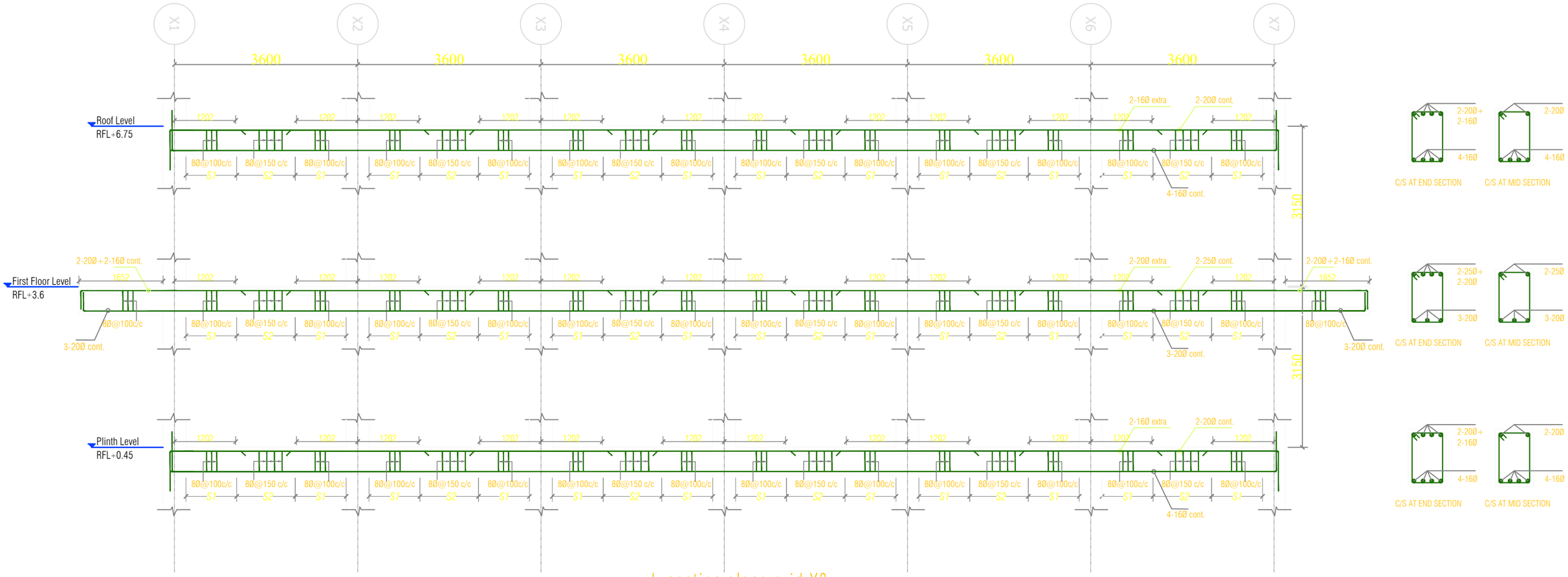

L-section along grid Y3

NOTE:
- S1=2D =8Ø @ 100 C/C (D=OVERALL DEPTH OF BEAM)
- S2=8Ø @ 150 C/C
- THE FIRST STIRRUPS IS PLACED MAXIMUM 50 MM FROM THE FACE OF COLUMN

Khorlochhu

STRUCTURAL DRAWING

PROJECT TITLE	DRAWING TITLE
Construction of Doksum Primary School	BEAM_SECTION_ALONG_FRAME_Y3

NOTES

1. ALL DIMENSIONS ARE IN MILLIMETER & ELEVATION IN METER UNLESS SPECIFIED OTHERWISE.
2. ALL DIMENSIONS MEASURE UNFINISHED SURFACES UNLESS SPECIFIED OTHERWISE.
3. DIMENSIONS ARE TO BE READ AND NOT SCALED OFF.
4. ANY DISCREPANCIES IN THE DRAWING ARE TO BE BROUGHT TO THE IMMEDIATE NOTICE OF THE SUPERVISION TEAM.

CHECKED	APPROVED	DATE	DRAWING NO.
			STR_17
		MARCH, 2026	SCALE
			NTS

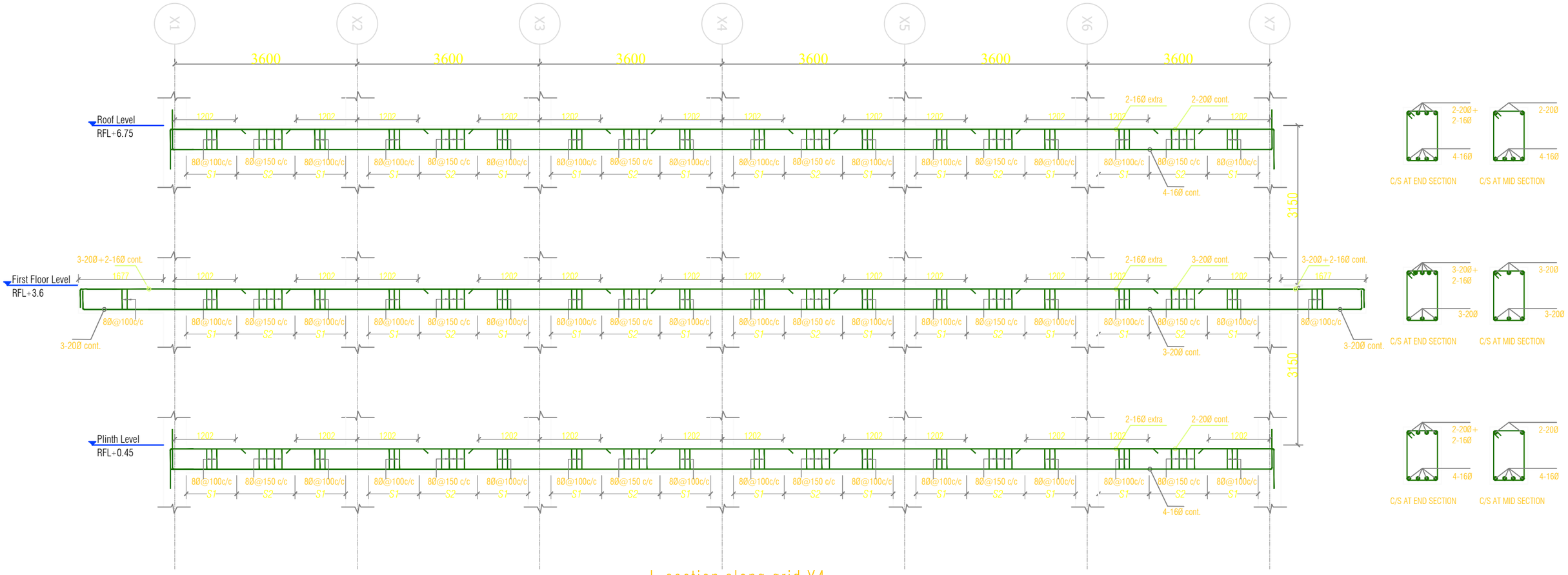

L-section along grid Y4

NOTE:
- S1=2D =8Ø @ 100 C/C (D=OVERALL DEPTH OF BEAM)
- S2=8Ø @ 150 C/C
- THE FIRST STIRRUPS IS PLACED MAXIMUM 50 MM FROM THE FACE OF COLUMN

Khorlochhu

STRUCTURAL DRAWING

PROJECT TITLE	DRAWING TITLE
Construction of Doksum Primary School	BEAM_SECTION_ALONG_FRAME_Y4

NOTES

1. ALL DIMENSIONS ARE IN MILLIMETER & ELEVATION IN METER UNLESS SPECIFIED OTHERWISE.
2. ALL DIMENSIONS MEASURE UNFINISHED SURFACES UNLESS SPECIFIED OTHERWISE.
3. DIMENSIONS ARE TO BE READ AND NOT SCALED OFF.
4. ANY DISCREPANCIES IN THE DRAWING ARE TO BE BROUGHT TO THE IMMEDIATE NOTICE OF THE SUPERVISION TEAM.

CHECKED	APPROVED	DATE	DRAWING NO.
			STR_18
		MARCH, 2026	SCALE
			NTS

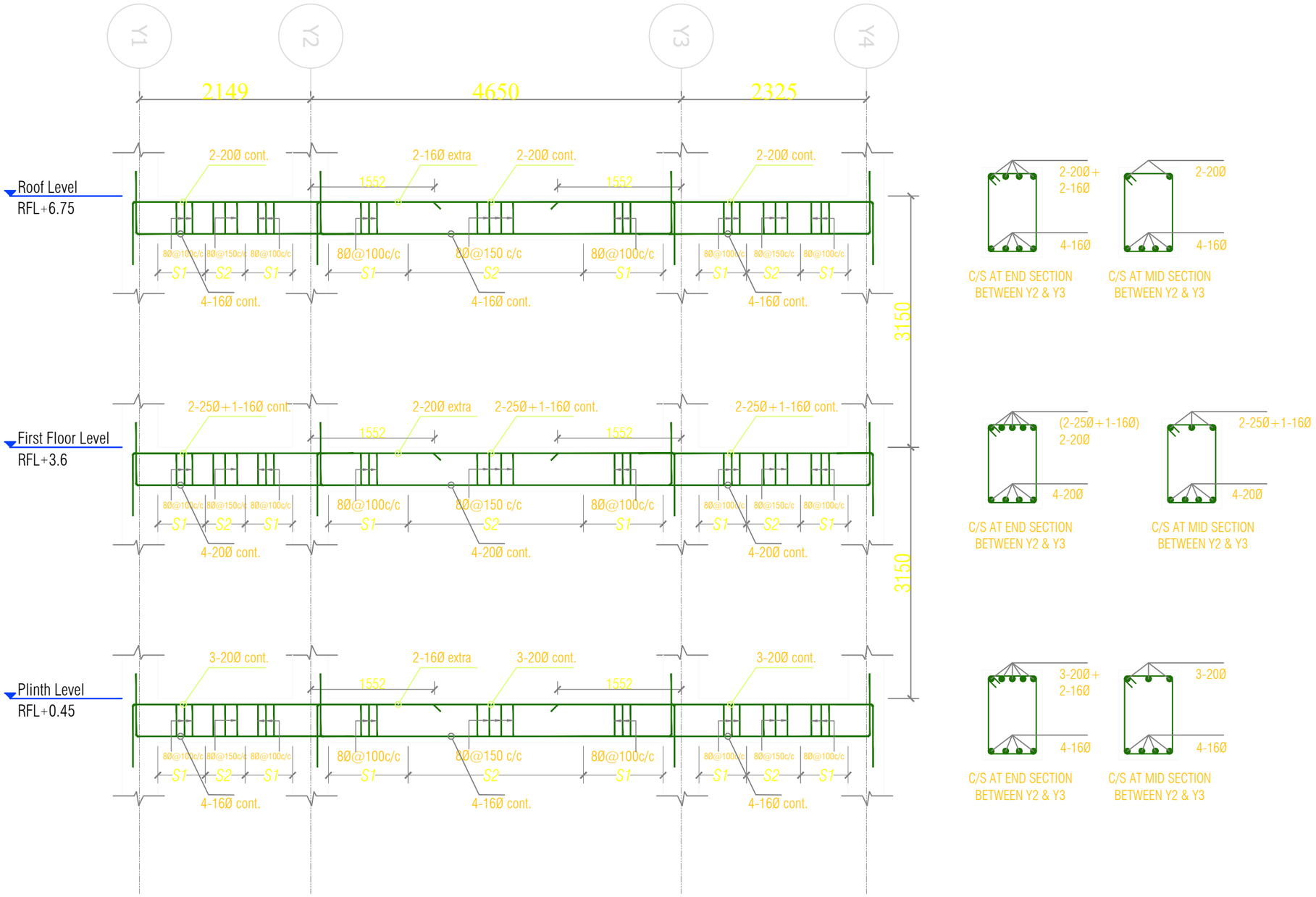

L-section along grid X1, X3, X5 & X7

NOTE:
- S1=2D =8Ø @ 100 C/C (D=OVERALL DEPTH OF BEAM)
- S2=8Ø @ 150 C/C
- THE FIRST STIRRUPS IS PLACED MAXIMUM 50 MM FROM THE FACE OF COLUMN

Khorlochhu

STRUCTURAL DRAWING

PROJECT TITLE	DRAWING TITLE
Construction of Doksum Primary School	BEAM_SECTION_ALONG_FRAME_X1,_X3,_X5_&_X7

NOTES

1. ALL DIMENSIONS ARE IN MILLIMETER & ELEVATION IN METER UNLESS SPECIFIED OTHERWISE.
2. ALL DIMENSIONS MEASURE UNFINISHED SURFACES UNLESS SPECIFIED OTHERWISE.
3. DIMENSIONS ARE TO BE READ AND NOT SCALED OFF.
4. ANY DISCREPANCIES IN THE DRAWING ARE TO BE BROUGHT TO THE IMMEDIATE NOTICE OF THE SUPERVISION TEAM.

CHECKED	APPROVED	DATE	DRAWING NO.
			STR_19
		MARCH, 2026	SCALE
			NTS

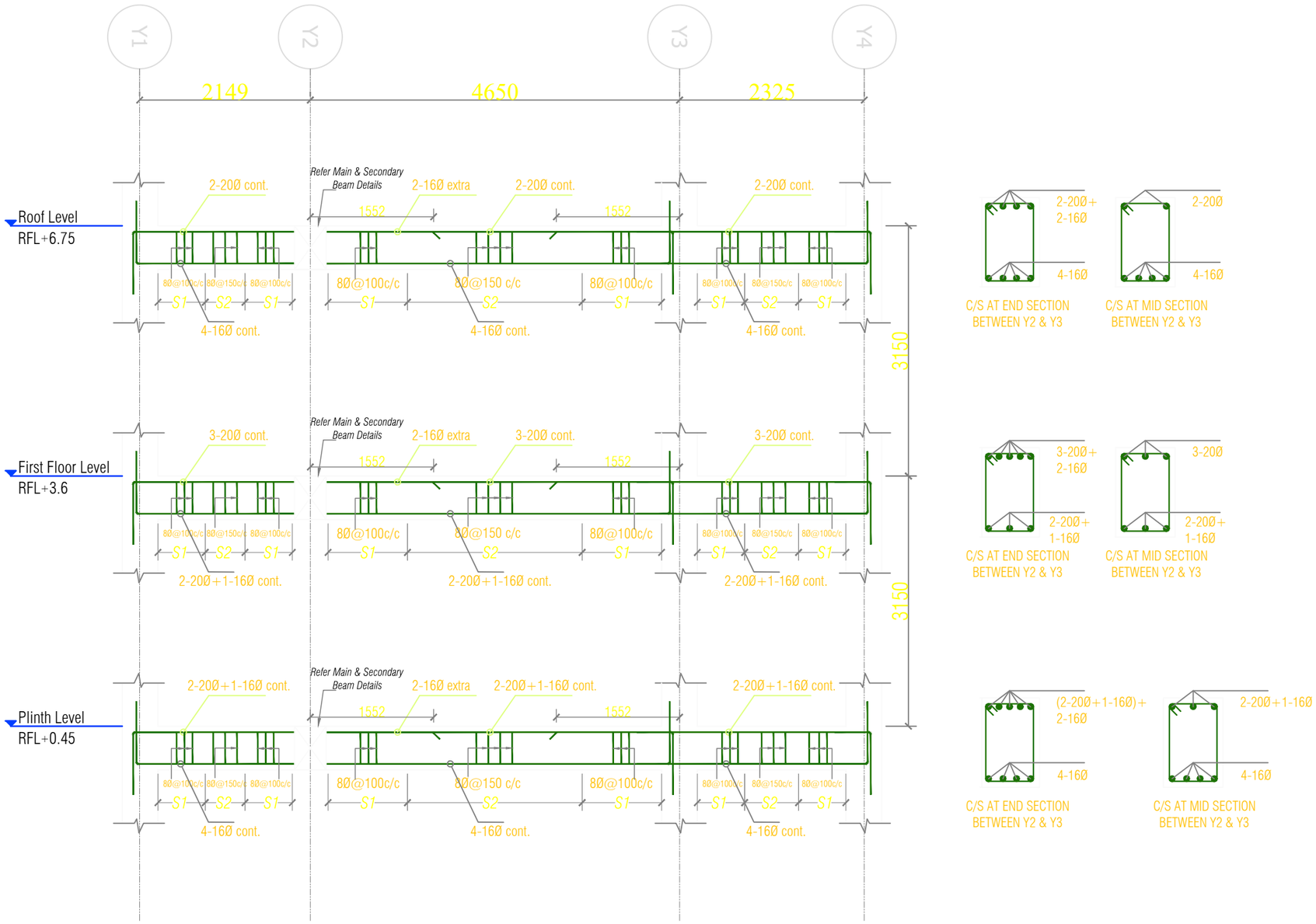

L-section along grid X2, X4 & X6

NOTE:
- S1=2D =8Ø @ 100 C/C (D=OVERALL DEPTH OF BEAM)
- S2= =8Ø @ 150 C/C
- THE FIRST STIRRUPS IS PLACED MAXIMUM 50 MM FROM THE FACE OF COLUMN

Khorlochhu

STRUCTURAL DRAWING

PROJECT TITLE	DRAWING TITLE
Construction of Doksum Primary School	BEAM_SECTION_ALONG_FRAME_X2,_X4_&_X6

NOTES

1. ALL DIMENSIONS ARE IN MILLIMETER & ELEVATION IN METER UNLESS SPECIFIED OTHERWISE.
2. ALL DIMENSIONS MEASURE UNFINISHED SURFACES UNLESS SPECIFIED OTHERWISE.
3. DIMENSIONS ARE TO BE READ AND NOT SCALED OFF.
4. ANY DISCREPANCIES IN THE DRAWING ARE TO BE BROUGHT TO THE IMMEDIATE NOTICE OF THE SUPERVISION TEAM.

CHECKED	APPROVED	DATE	DRAWING NO.
			STR_20
		MARCH, 2026	SCALE
			NTS

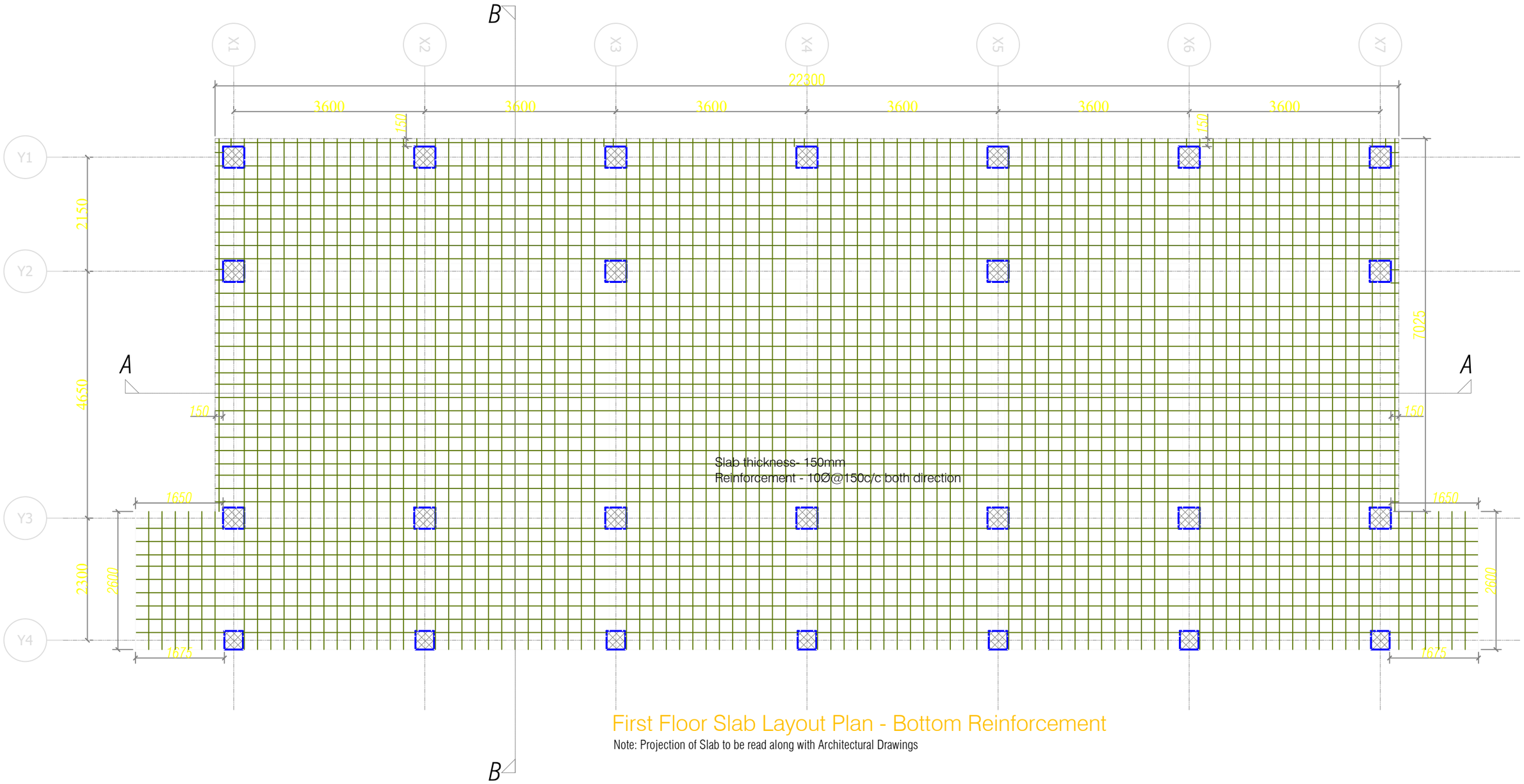

First Floor Slab Layout Plan - Bottom Reinforcement

Note: Projection of Slab to be read along with Architectural Drawings

Khorlochhu

STRUCTURAL DRAWING

PROJECT TITLE	DRAWING TITLE
Construction of Doksum Primary School	FIRST_FLOOR_SLAB_LAYOUT

NOTES

1. ALL DIMENSIONS ARE IN MILLIMETER & ELEVATION IN METER UNLESS SPECIFIED OTHERWISE.
2. ALL DIMENSIONS MEASURE UNFINISHED SURFACES UNLESS SPECIFIED OTHERWISE.
3. DIMENSIONS ARE TO BE READ AND NOT SCALED OFF.
4. ANY DISCREPANCIES IN THE DRAWING ARE TO BE BROUGHT TO THE IMMEDIATE NOTICE OF THE SUPERVISION TEAM.

CHECKED	APPROVED	DATE	DRAWING NO.
			STR_21
		MARCH, 2026	SCALE
			NTS

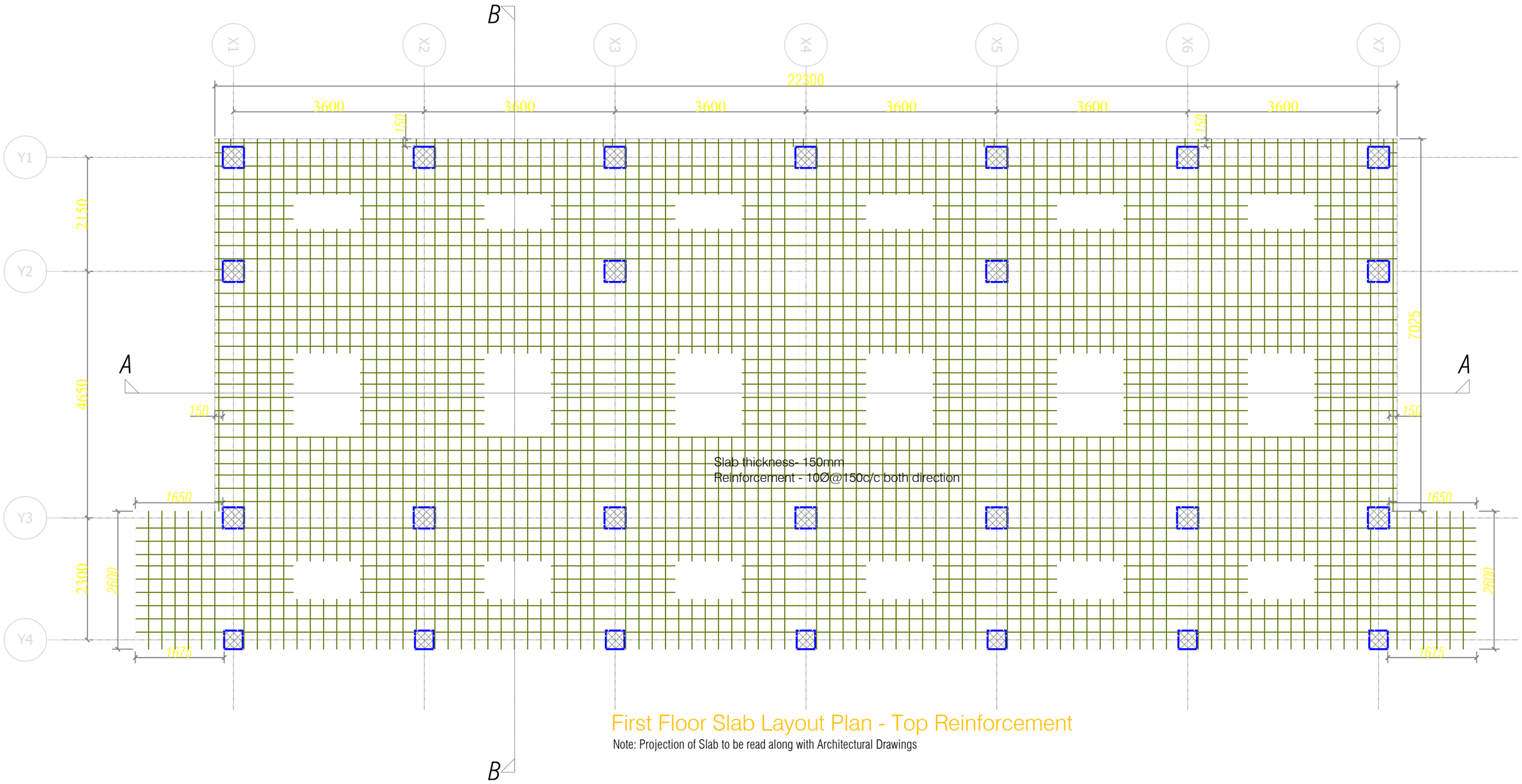

First Floor Slab Layout Plan - Top Reinforcement

Note: Projection of Slab to be read along with Architectural Drawings

Khorlochhu

STRUCTURAL DRAWING

PROJECT TITLE	DRAWING TITLE
Construction of Doksum Primary School	FIRST_FLOOR_SLAB_LAYOUT

NOTES

1. ALL DIMENSIONS ARE IN MILLIMETER & ELEVATION IN METER UNLESS SPECIFIED OTHERWISE.
2. ALL DIMENSIONS MEASURE UNFINISHED SURFACES UNLESS SPECIFIED OTHERWISE.
3. DIMENSIONS ARE TO BE READ AND NOT SCALED OFF.
4. ANY DISCREPANCIES IN THE DRAWING ARE TO BE BROUGHT TO THE IMMEDIATE NOTICE OF THE SUPERVISION TEAM.

CHECKED	APPROVED	DATE	DRAWING NO.
			STR_22
		MARCH, 2026	SCALE
			NTS

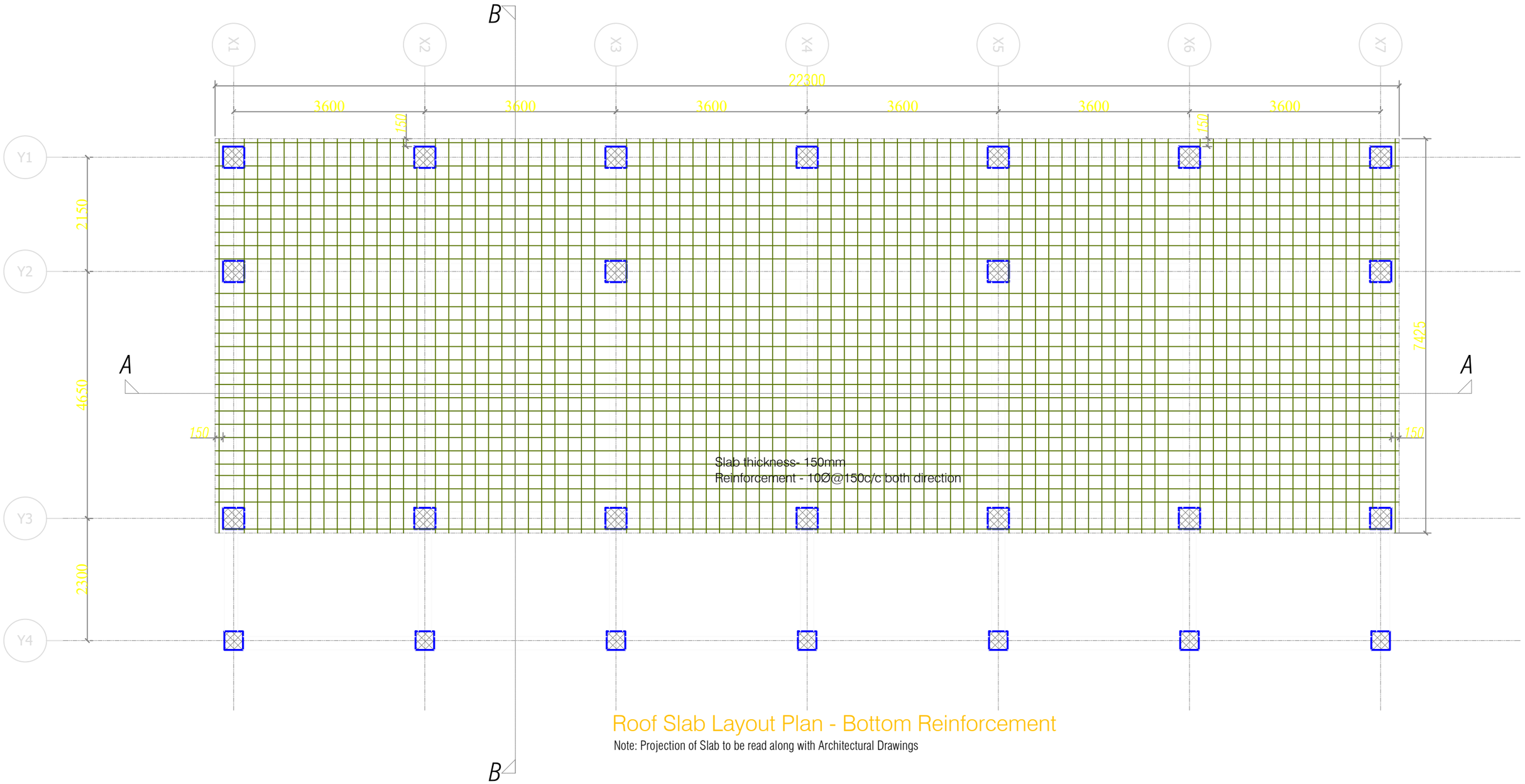

Roof Slab Layout Plan - Bottom Reinforcement

Note: Projection of Slab to be read along with Architectural Drawings

Khorlochhu	STRUCTURAL DRAWING	NOTES	CHECKED	APPROVED	DATE	DRAWING NO.
	PROJECT TITLE: Construction of Doksum Primary School	1. ALL DIMENSIONS ARE IN MILLIMETER & ELEVATION IN METER UNLESS SPECIFIED OTHERWISE. 2. ALL DIMENSIONS MEASURE UNFINISHED SURFACES UNLESS SPECIFIED OTHERWISE. 3. DIMENSIONS ARE TO BE READ AND NOT SCALED OFF. 4. ANY DISCREPANCIES IN THE DRAWING ARE TO BE BROUGHT TO THE IMMEDIATE NOTICE OF THE SUPERVISION TEAM.				STR_23
	DRAWING TITLE: ROOF_SLAB_LAYOUT				MARCH, 2026	SCALE: NTS

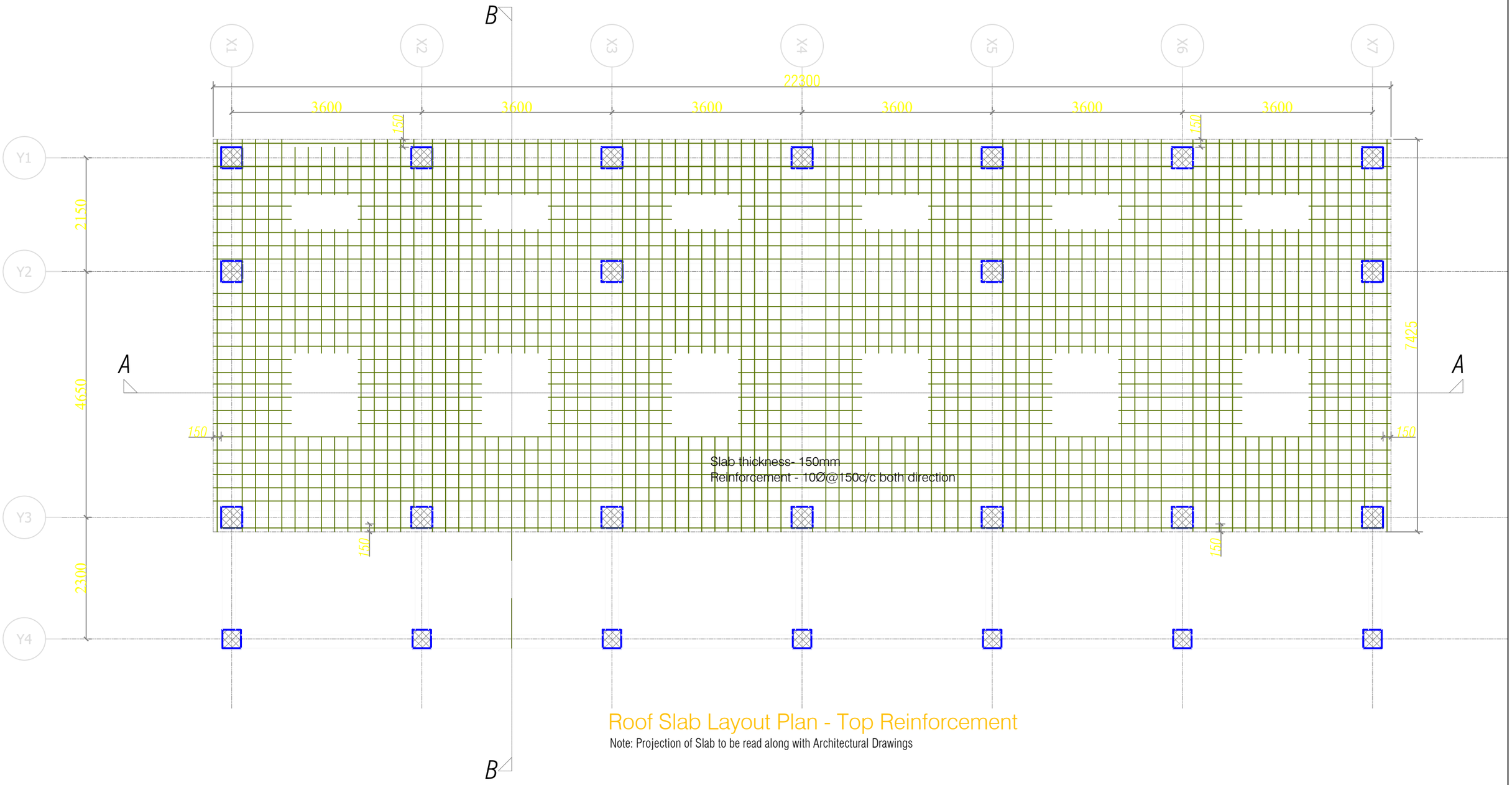

Roof Slab Layout Plan - Top Reinforcement

Note: Projection of Slab to be read along with Architectural Drawings

Khorlochhu

STRUCTURAL DRAWING

PROJECT TITLE	DRAWING TITLE
Construction of Doksum Primary School	ROOF_SLAB_LAYOUT

NOTES

1. ALL DIMENSIONS ARE IN MILLIMETER & ELEVATION IN METER UNLESS SPECIFIED OTHERWISE.
2. ALL DIMENSIONS MEASURE UNFINISHED SURFACES UNLESS SPECIFIED OTHERWISE.
3. DIMENSIONS ARE TO BE READ AND NOT SCALED OFF.
4. ANY DISCREPANCIES IN THE DRAWING ARE TO BE BROUGHT TO THE IMMEDIATE NOTICE OF THE SUPERVISION TEAM.

CHECKED	APPROVED	DATE	DRAWING NO.
			STR_24
		MARCH, 2026	SCALE
			NTS

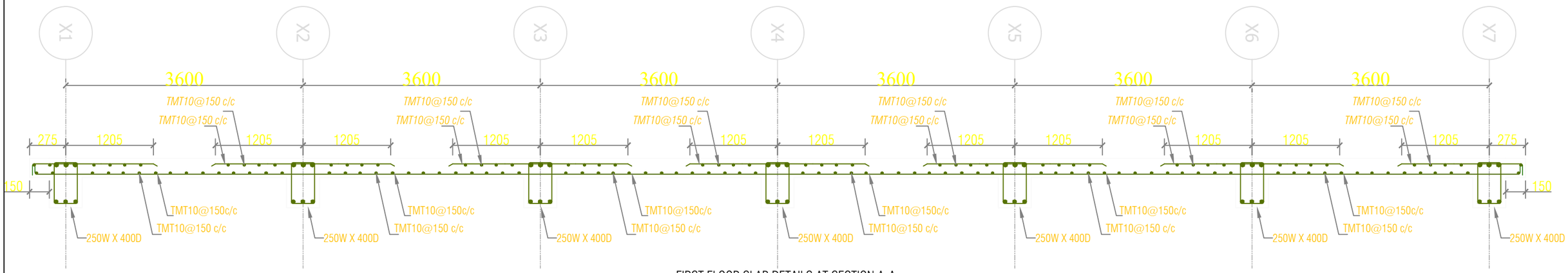

FIRST FLOOR SLAB DETAILS AT SECTION A-A
(NOTE: 150MM THICKNESS OF SLAB)

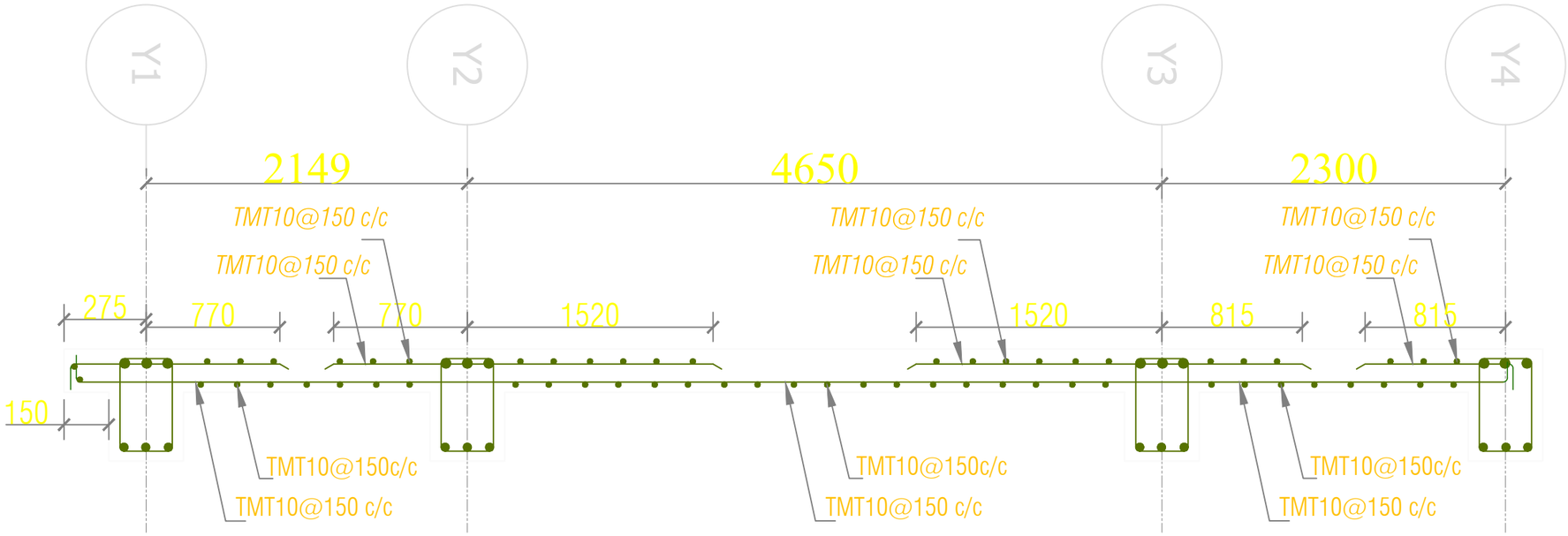

FIRST FLOOR SLAB DETAILS AT SECTION A-A
(NOTE: 150MM THICKNESS OF SLAB)

Khorlochhu

STRUCTURAL DRAWING

PROJECT TITLE	DRAWING TITLE
Construction of Doksum Primary School	SLAB_SECTION_A-A_&_SECTION_B-B

NOTES

1. ALL DIMENSIONS ARE IN MILLIMETER & ELEVATION IN METER UNLESS SPECIFIED OTHERWISE.
2. ALL DIMENSIONS MEASURE UNFINISHED SURFACES UNLESS SPECIFIED OTHERWISE.
3. DIMENSIONS ARE TO BE READ AND NOT SCALED OFF.
4. ANY DISCREPANCIES IN THE DRAWING ARE TO BE BROUGHT TO THE IMMEDIATE NOTICE OF THE SUPERVISION TEAM.

CHECKED	APPROVED	DATE	DRAWING NO.
			STR_25
		MARCH, 2026	SCALE
			NTS

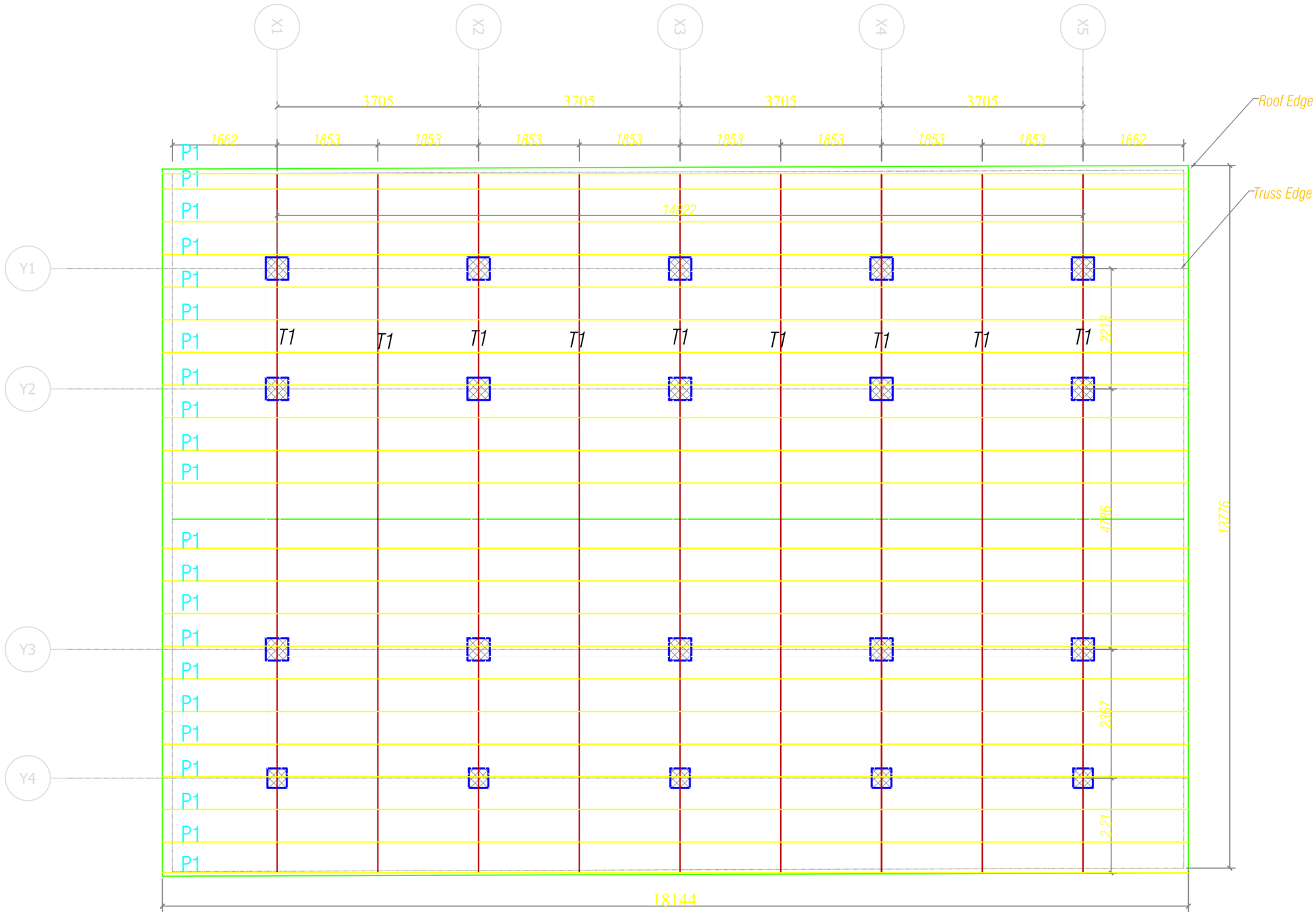

Upper Truss Layout Plan

Khorlochhu	**STRUCTURAL DRAWING**	**NOTES**	**CHECKED**	**APPROVED**	**DATE**	**DRAWING NO.**
	PROJECT TITLE / **DRAWING TITLE**	1. ALL DIMENSIONS ARE IN MILLIMETER & ELEVATION IN METER UNLESS SPECIFIED OTHERWISE. 2. ALL DIMENSIONS MEASURE UNFINISHED SURFACES UNLESS SPECIFIED OTHERWISE. 3. DIMENSIONS ARE TO BE READ AND NOT SCALED OFF. 4. ANY DISCREPANCIES IN THE DRAWING ARE TO BE BROUGHT TO THE IMMEDIATE NOTICE OF THE SUPERVISION TEAM.				STR_26
	Construction of Doksum Primary School / UPPER_ROOF_TRUSS_LAYOUT				MARCH, 2026	**SCALE** NTS

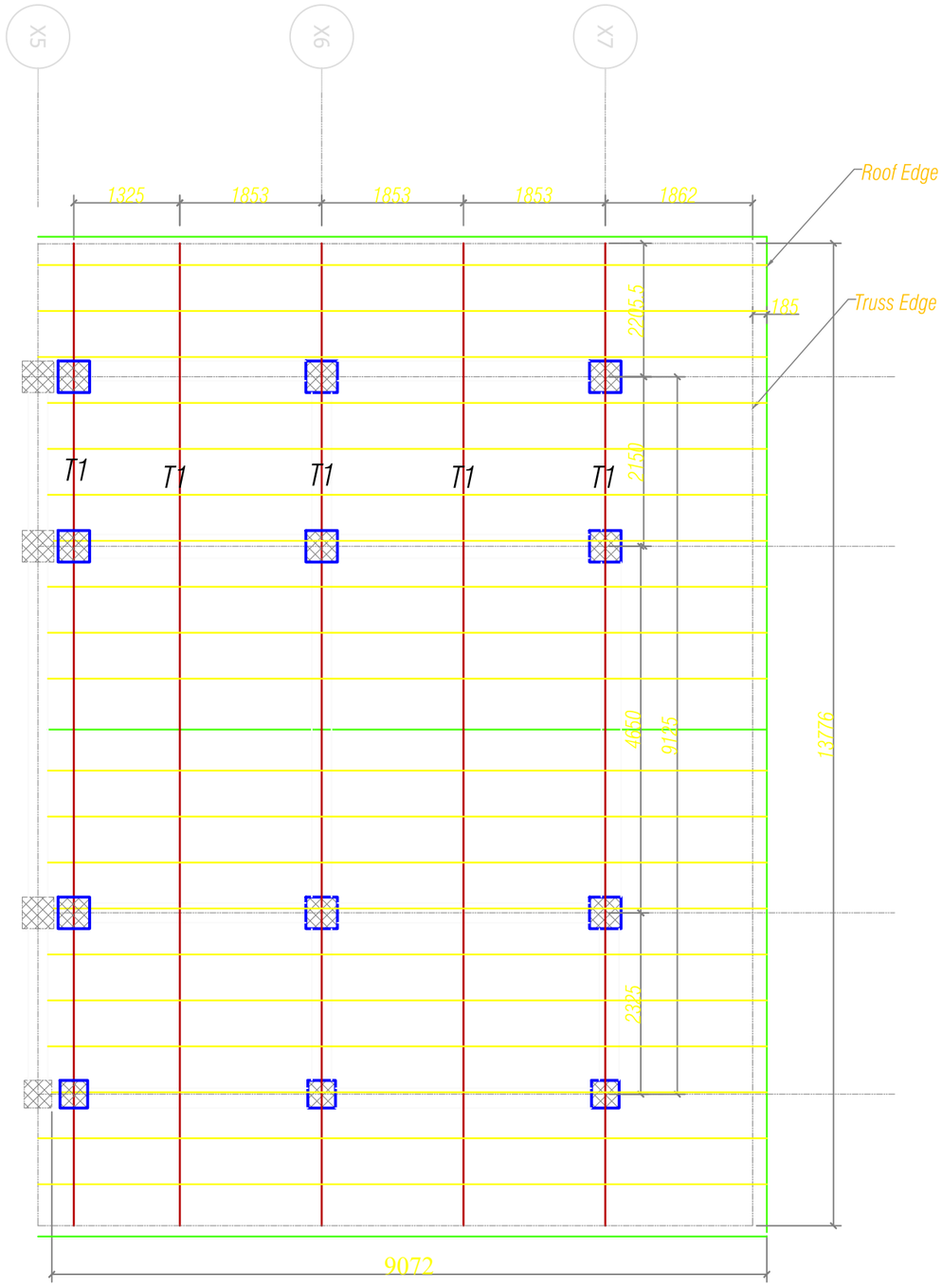

Lower Truss Layout Plan

Khorlochhu

STRUCTURAL DRAWING

PROJECT TITLE	DRAWING TITLE
Construction of Doksum Primary School	LOWER_ROOF_TRUSS_LAYOUT

NOTES

1. ALL DIMENSIONS ARE IN MILLIMETER & ELEVATION IN METER UNLESS SPECIFIED OTHERWISE.
2. ALL DIMENSIONS MEASURE UNFINISHED SURFACES UNLESS SPECIFIED OTHERWISE.
3. DIMENSIONS ARE TO BE READ AND NOT SCALED OFF.
4. ANY DISCREPANCIES IN THE DRAWING ARE TO BE BROUGHT TO THE IMMEDIATE NOTICE OF THE SUPERVISION TEAM.

CHECKED	APPROVED	DATE	DRAWING NO.
			STR_27
		MARCH, 2026	SCALE
			NTS

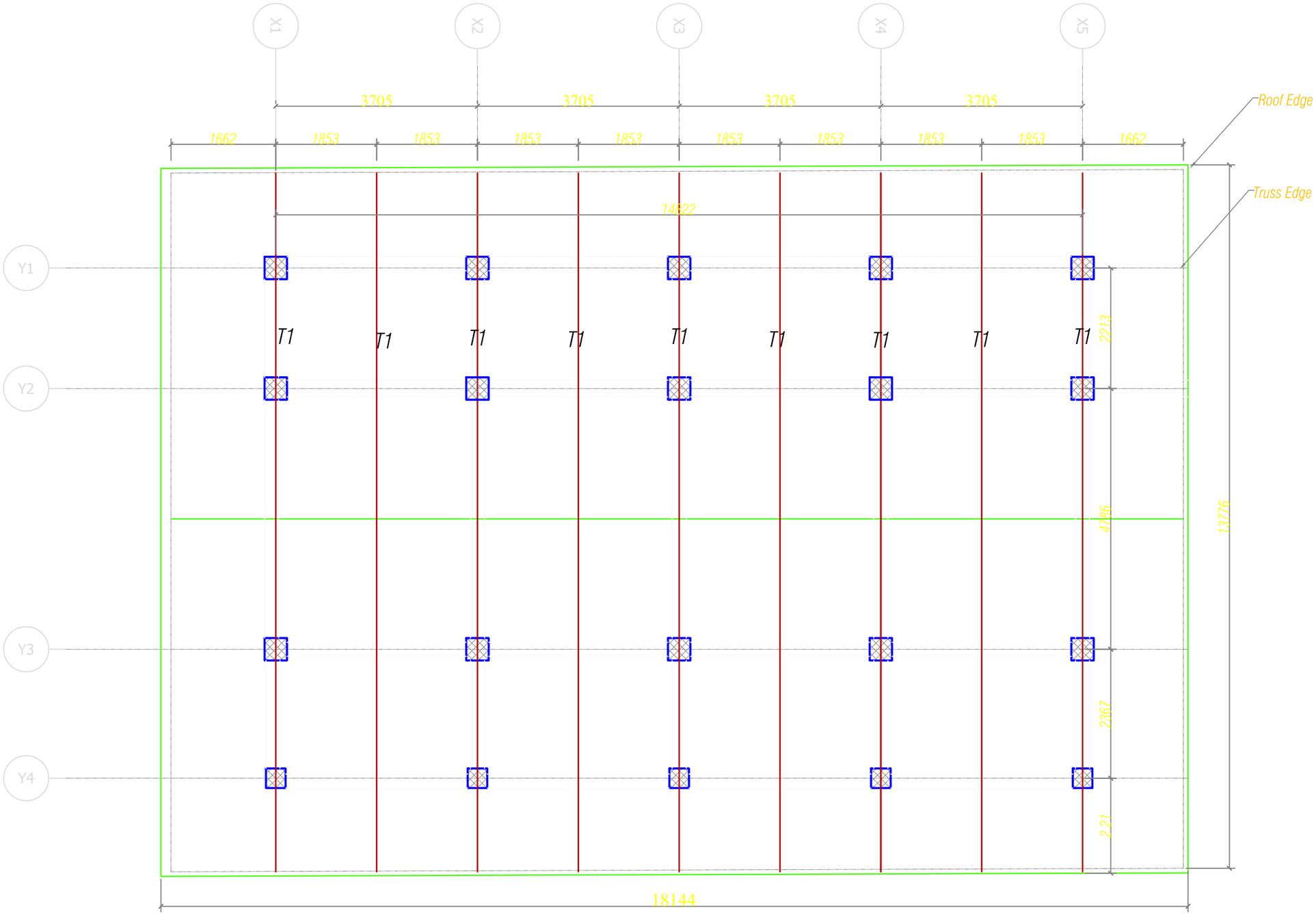

Upper Truss Layout Plan

Khorlochhu

STRUCTURAL DRAWING

PROJECT TITLE	DRAWING TITLE
Construction of Doksum Primary School	TRUSS_DETAILS

NOTES

1. ALL DIMENSIONS ARE IN MILLIMETER & ELEVATION IN METER UNLESS SPECIFIED OTHERWISE.
2. ALL DIMENSIONS MEASURE UNFINISHED SURFACES UNLESS SPECIFIED OTHERWISE.
3. DIMENSIONS ARE TO BE READ AND NOT SCALED OFF.
4. ANY DISCREPANCIES IN THE DRAWING ARE TO BE BROUGHT TO THE IMMEDIATE NOTICE OF THE SUPERVISION TEAM.

CHECKED	APPROVED	DATE	DRAWING NO.
			STR_28
		MARCH, 2026	SCALE
			NTS

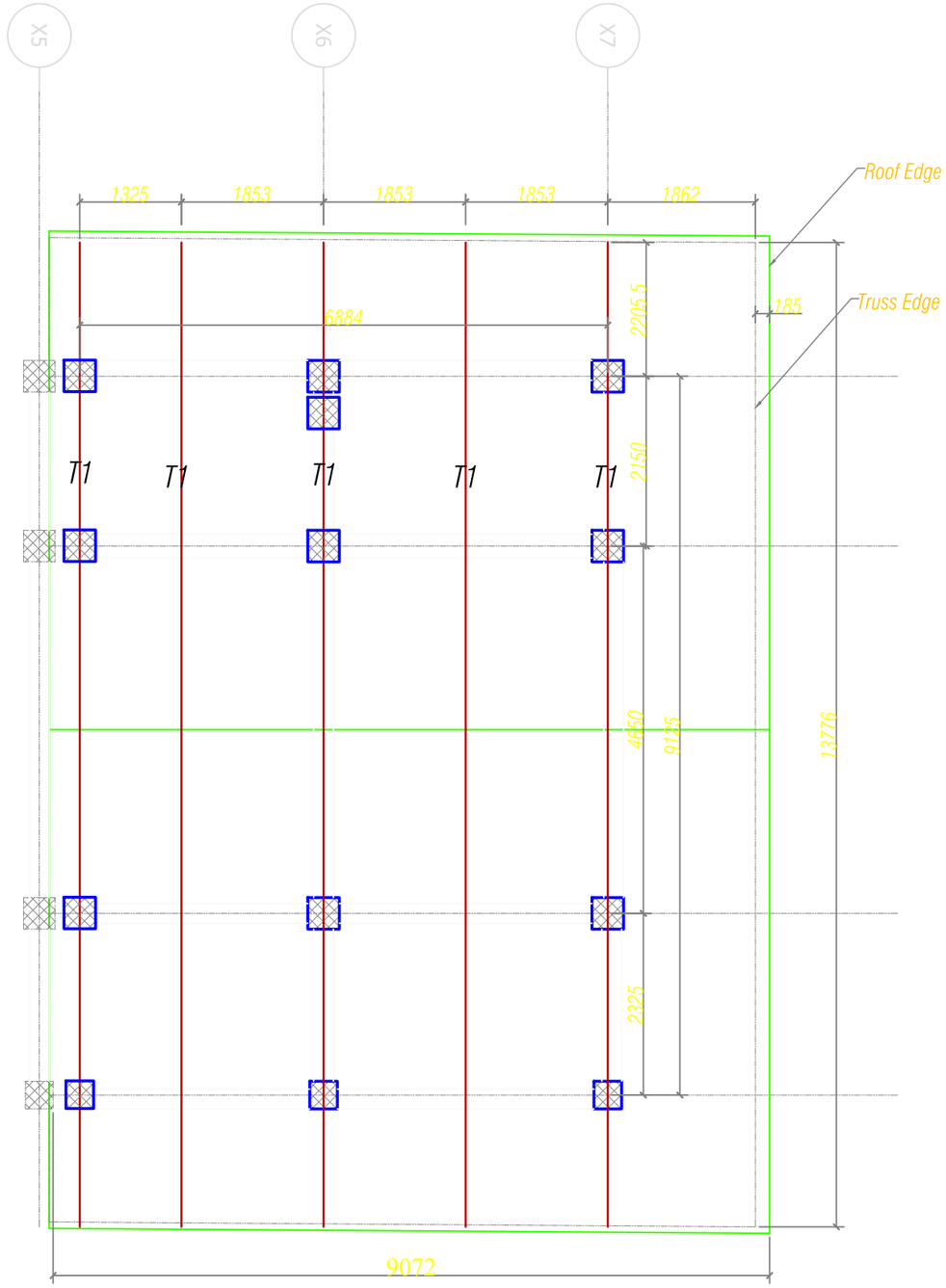

Lower Truss Layout Plan

Khorlochhu	STRUCTURAL DRAWING	NOTES	CHECKED	APPROVED	DATE	DRAWING NO.
	PROJECT TITLE: Construction of Doksum Primary School	1. ALL DIMENSIONS ARE IN MILLIMETER & ELEVATION IN METER UNLESS SPECIFIED OTHERWISE. 2. ALL DIMENSIONS MEASURE UNFINISHED SURFACES UNLESS SPECIFIED OTHERWISE. 3. DIMENSIONS ARE TO BE READ AND NOT SCALED OFF. 4. ANY DISCREPANCIES IN THE DRAWING ARE TO BE BROUGHT TO THE IMMEDIATE NOTICE OF THE SUPERVISION TEAM.				STR_29
	DRAWING TITLE: TRUSS_DETAILS				MARCH, 2026	SCALE: NTS

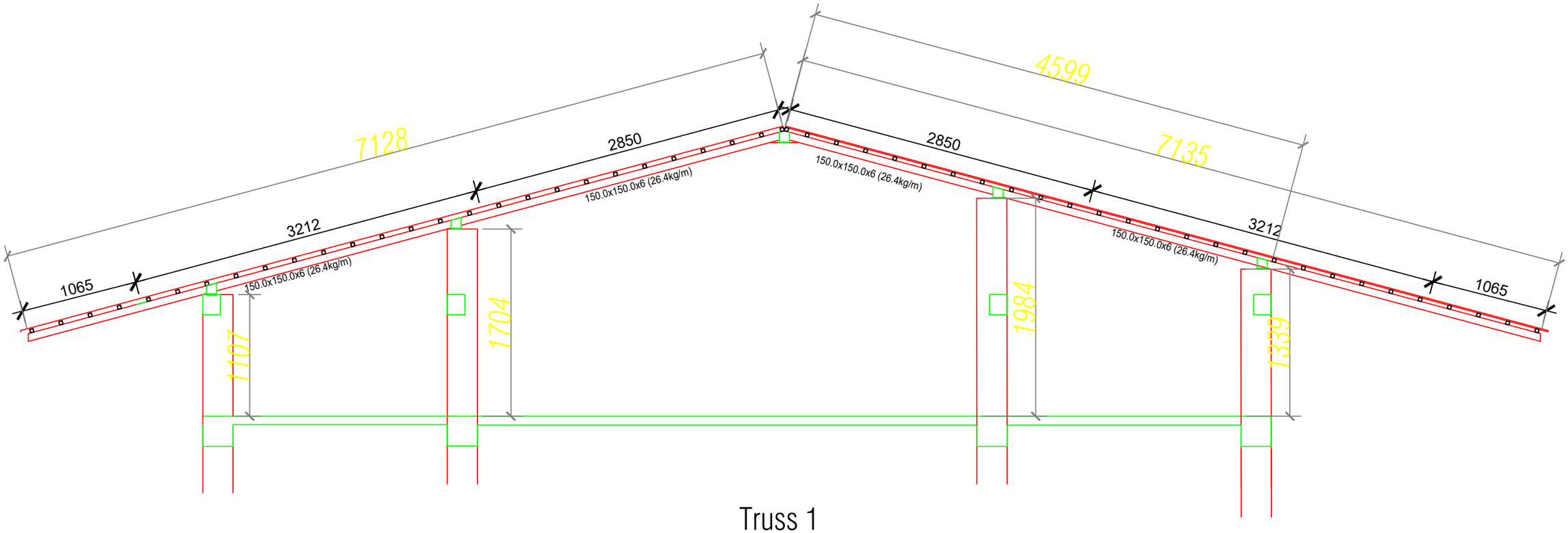

Truss 1
(T1)

NOTE:
Truss Member sizes are as follows:
1. rafter/ties = 100.0x100.0x5(14.41kg/m)
2. purlins = 72.0x72.0x3.2 (6.71kg/m)
3. spacing of purlins - 600mm c/c
4. minimum weld size = 5mm

Khorlochhu

STRUCTURAL DRAWING

PROJECT TITLE	DRAWING TITLE
Construction of Doksum Primary School	TRUSS_DETAILS

NOTES

1. ALL DIMENSIONS ARE IN MILLIMETER & ELEVATION IN METER UNLESS SPECIFIED OTHERWISE.
2. ALL DIMENSIONS MEASURE UNFINISHED SURFACES UNLESS SPECIFIED OTHERWISE.
3. DIMENSIONS ARE TO BE READ AND NOT SCALED OFF.
4. ANY DISCREPANCIES IN THE DRAWING ARE TO BE BROUGHT TO THE IMMEDIATE NOTICE OF THE SUPERVISION TEAM.

CHECKED	APPROVED	DATE	DRAWING NO.
			STR_30
		MARCH, 2026	SCALE
			NTS

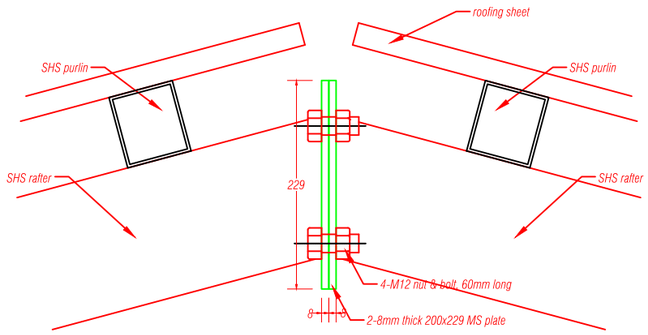

APEX RAFTER CONNECTION DETAILS

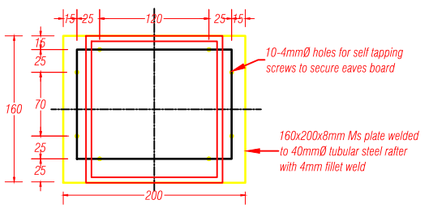

EAVES PLATE detail

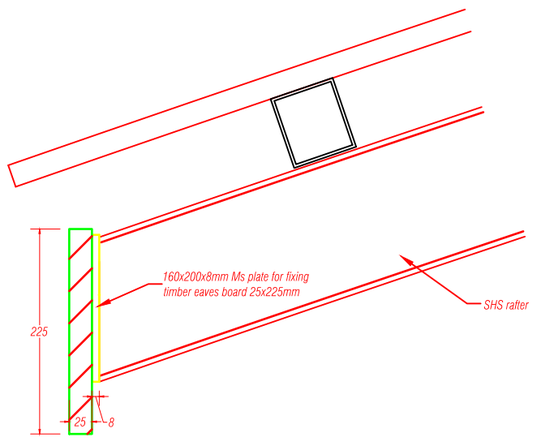

EAVES PLATE & BOARD section

NOTES:
Tubular steel of YST22 grade to be used.
All connections to be with fillet weld of 5mm size.

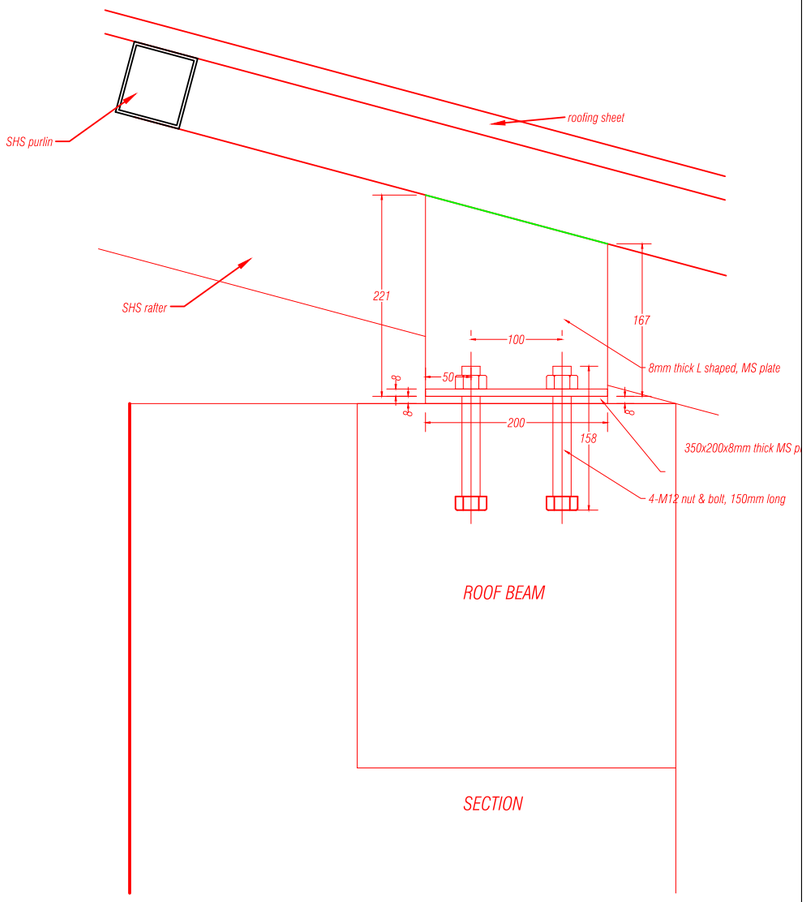

ROOF BEAM

SECTION

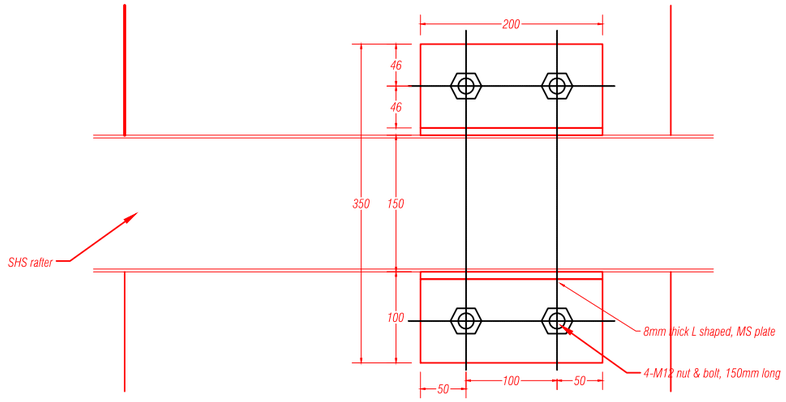

SECTIONAL PLAN

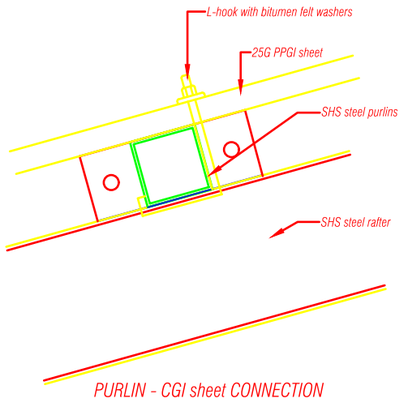

PURLIN - CGI sheet CONNECTION
(side view)

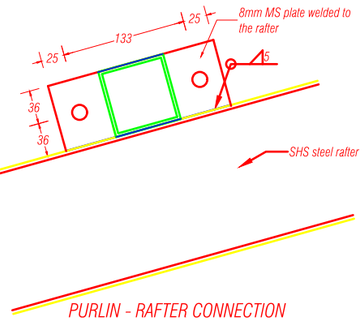

PURLIN - RAFTER CONNECTION
(side view)

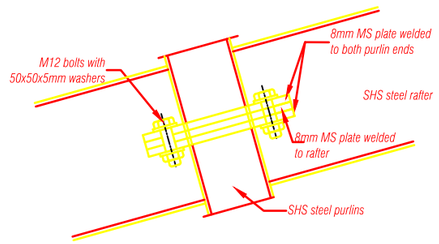

PURLIN - RAFTER CONNECTION
(top view)

Khorlochhu

STRUCTURAL DRAWING

PROJECT TITLE	DRAWING TITLE
Construction of Doksum Primary School	PURLIN_LAYOUT

NOTES

1. ALL DIMENSIONS ARE IN MILLIMETER & ELEVATION IN METER UNLESS SPECIFIED OTHERWISE.
2. ALL DIMENSIONS MEASURE UNFINISHED SURFACES UNLESS SPECIFIED OTHERWISE.
3. DIMENSIONS ARE TO BE READ AND NOT SCALED OFF.
4. ANY DISCREPANCIES IN THE DRAWING ARE TO BE BROUGHT TO THE IMMEDIATE NOTICE OF THE SUPERVISION TEAM.

CHECKED	APPROVED	DATE	DRAWING NO.
			STR_31
		MARCH, 2026	SCALE
			NTS

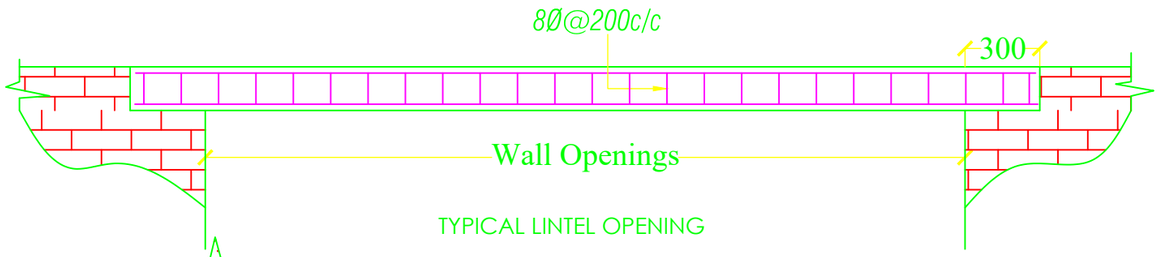

TYPICAL LINTEL OPENING

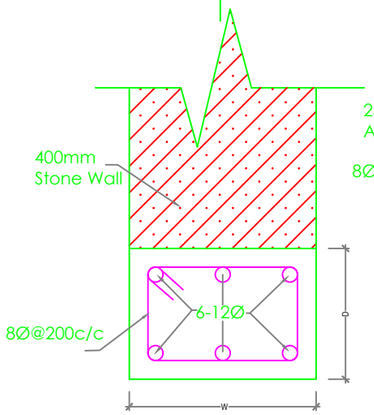

OPENING WITHIN EXTERNAL WALL

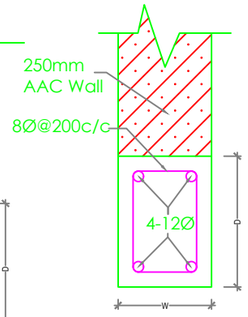

OPENING WITHIN INTERNAL WALL

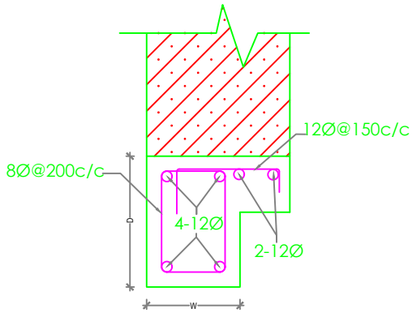

LINTEL WITH CORNICE

NOTE :

1. Depth (D) of Lintels is to be taken as shown in Architectural drawings, especially for main windows and should be taken as 150mm for all other Lintels.
2. Width (W) of Lintels is to be taken equal to the wall thickness.

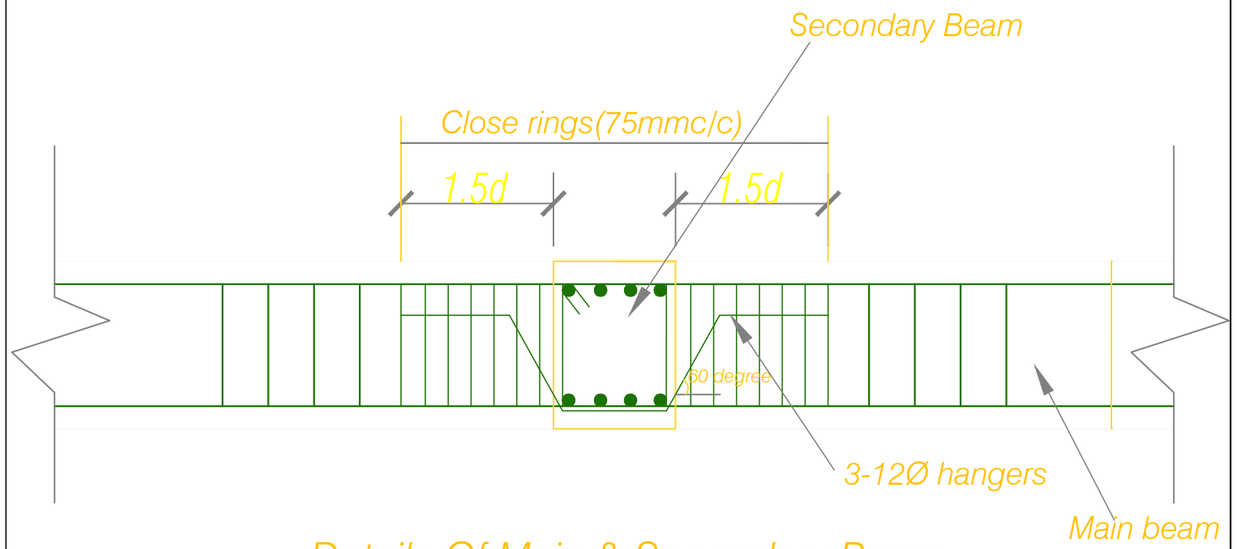

Details Of Main & Secondary Beam

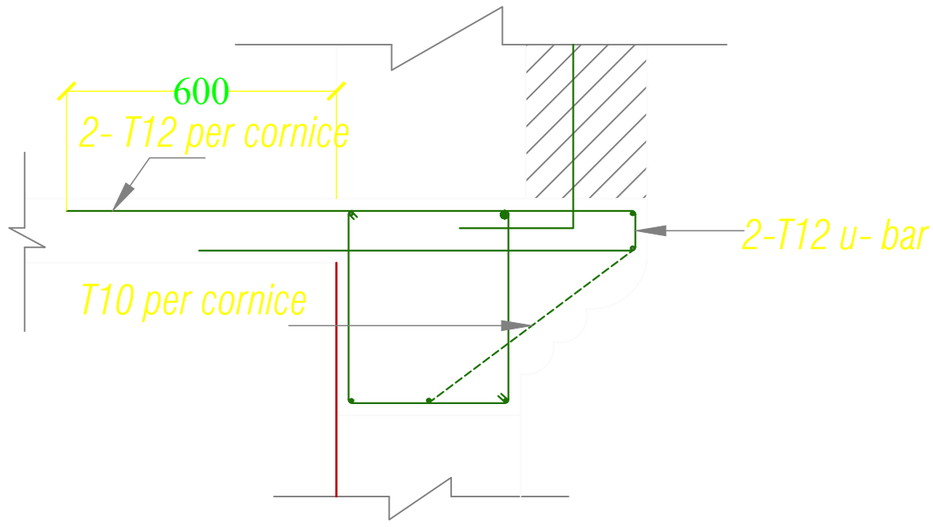

Khorlochhu

STRUCTURAL DRAWING

PROJECT TITLE	DRAWING TITLE
Construction of Doksum Primary School	LINTEL_DETAILS

NOTES

1. ALL DIMENSIONS ARE IN MILLIMETER & ELEVATION IN METER UNLESS SPECIFIED OTHERWISE.
2. ALL DIMENSIONS MEASURE UNFINISHED SURFACES UNLESS SPECIFIED OTHERWISE.
3. DIMENSIONS ARE TO BE READ AND NOT SCALED OFF.
4. ANY DISCREPANCIES IN THE DRAWING ARE TO BE BROUGHT TO THE IMMEDIATE NOTICE OF THE SUPERVISION TEAM.

CHECKED	APPROVED	DATE	DRAWING NO.
			STR_32
		MARCH, 2026	SCALE
			NTS

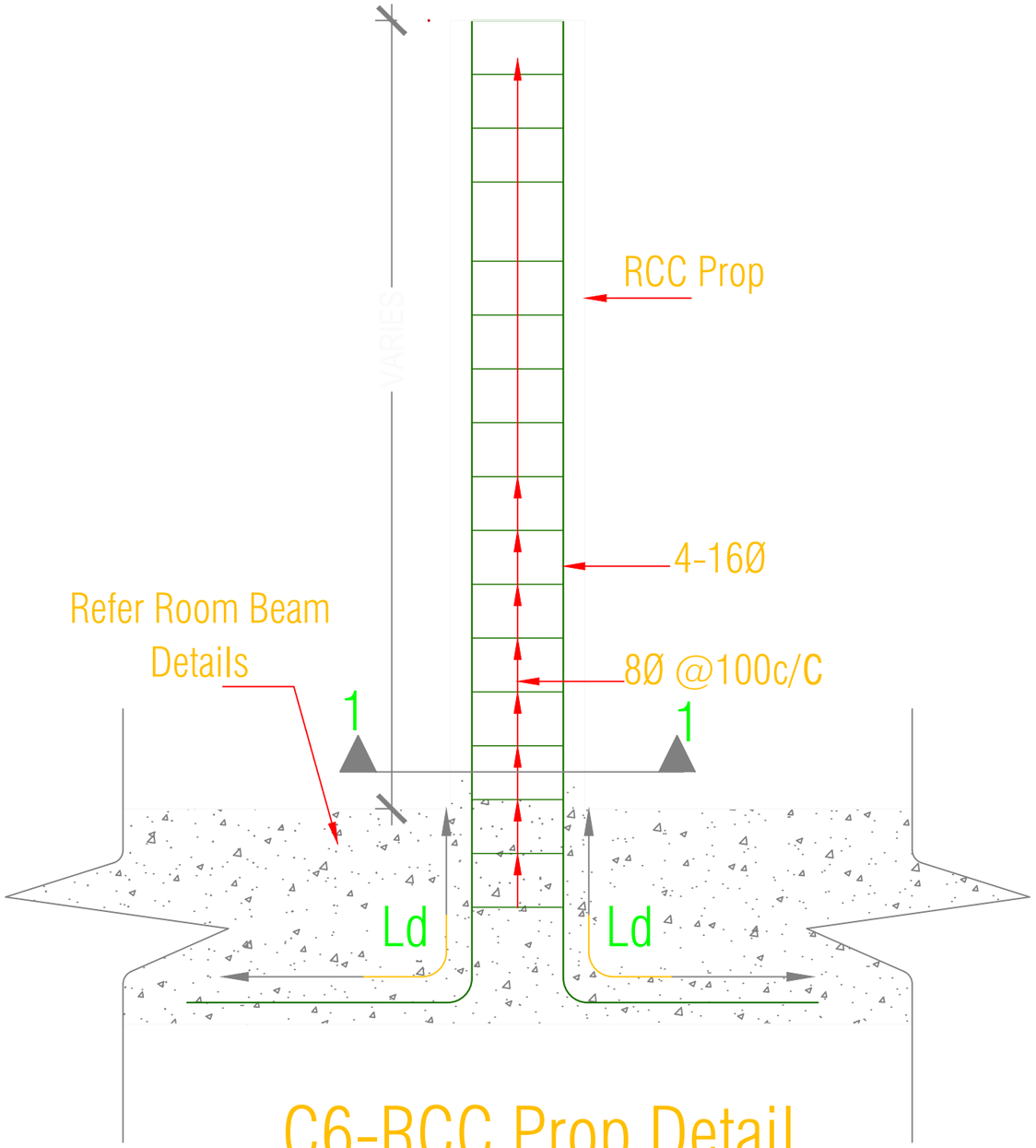

C6-RCC Prop Detail

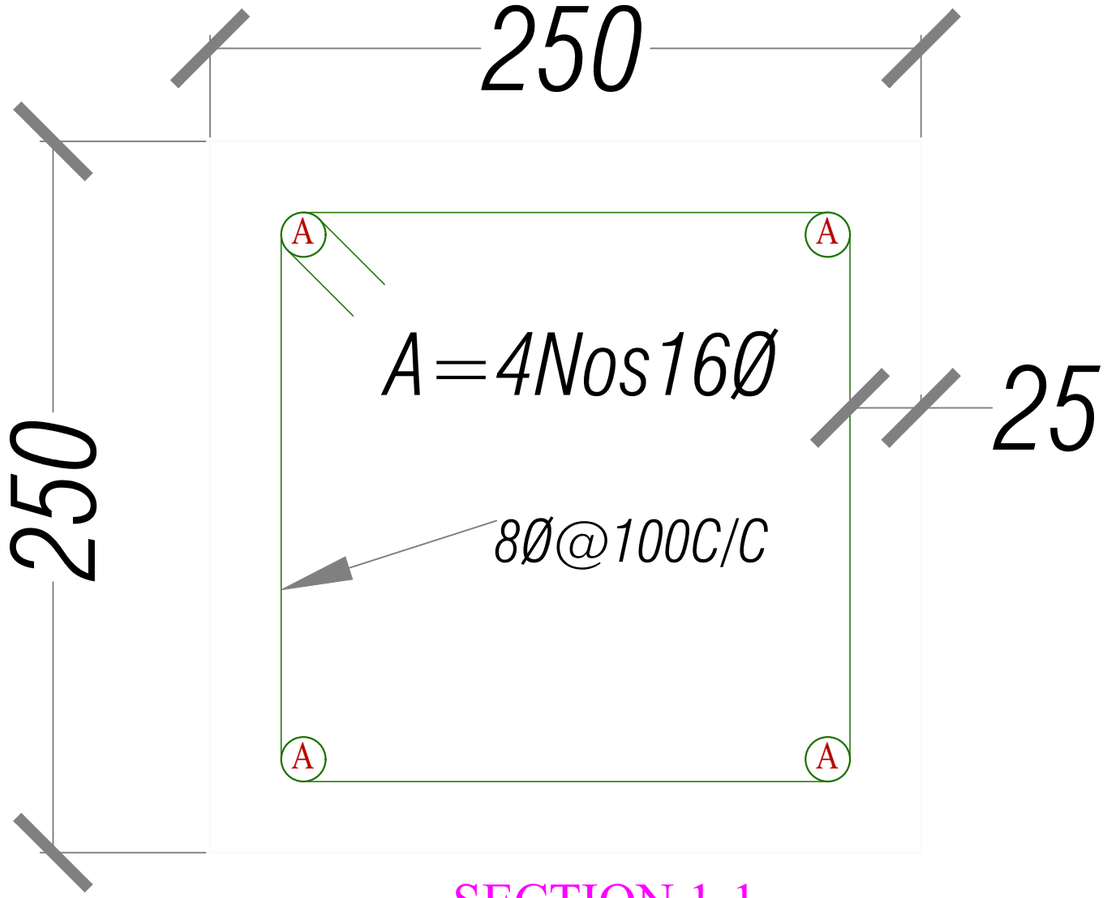

SECTION 1-1

Khorlochhu

STRUCTURAL DRAWING

PROJECT TITLE	DRAWING TITLE
Construction of Doksum Primary School	RCC_PROP

NOTES

1. ALL DIMENSIONS ARE IN MILLIMETER & ELEVATION IN METER UNLESS SPECIFIED OTHERWISE.
2. ALL DIMENSIONS MEASURE UNFINISHED SURFACES UNLESS SPECIFIED OTHERWISE.
3. DIMENSIONS ARE TO BE READ AND NOT SCALED OFF.
4. ANY DISCREPANCIES IN THE DRAWING ARE TO BE BROUGHT TO THE IMMEDIATE NOTICE OF THE SUPERVISION TEAM.

CHECKED	APPROVED	DATE	DRAWING NO.
			STR_33
		MARCH, 2026	SCALE
			NTS

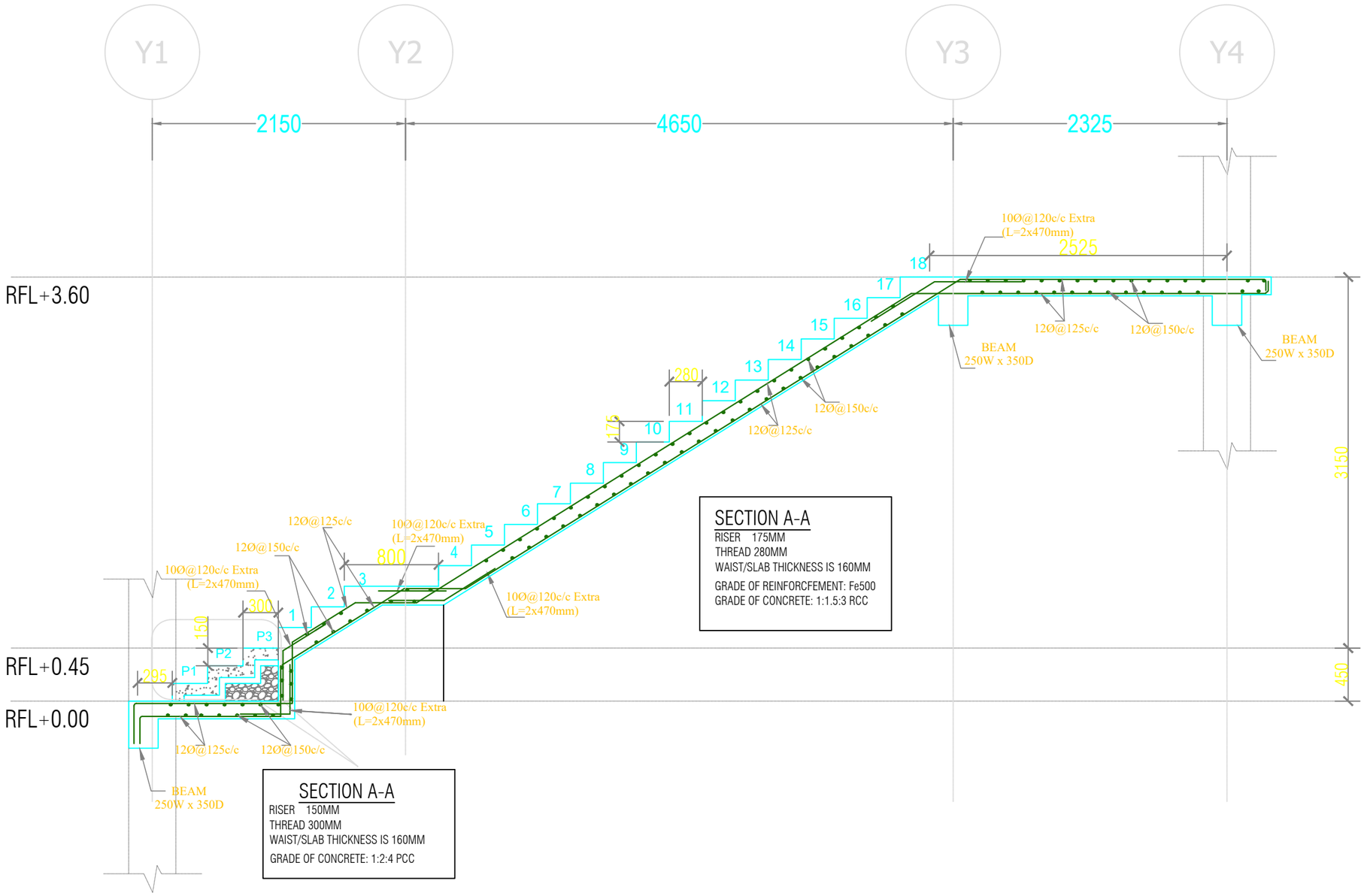

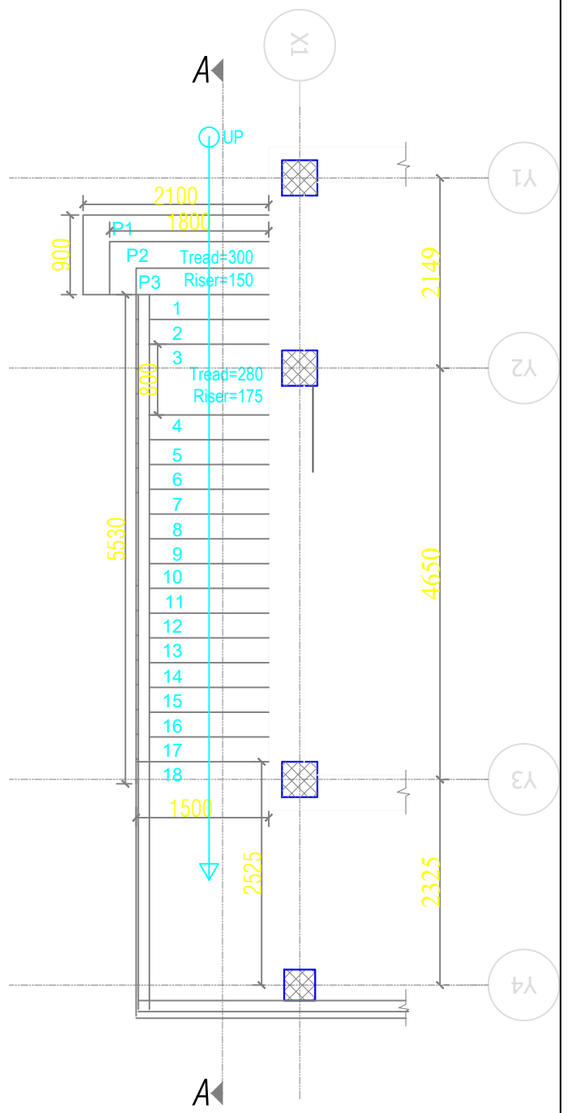

STAIRCASE PLAN
(GROUND FLOOR - FIRST FLOOR)

Khorlochhu

STRUCTURAL DRAWING

PROJECT TITLE	DRAWING TITLE
Construction of Doksum Primary School	STAIRCASE_DETAILS

NOTES

1. ALL DIMENSIONS ARE IN MILLIMETER & ELEVATION IN METER UNLESS SPECIFIED OTHERWISE.
2. ALL DIMENSIONS MEASURE UNFINISHED SURFACES UNLESS SPECIFIED OTHERWISE.
3. DIMENSIONS ARE TO BE READ AND NOT SCALED OFF.
4. ANY DISCREPANCIES IN THE DRAWING ARE TO BE BROUGHT TO THE IMMEDIATE NOTICE OF THE SUPERVISION TEAM.

CHECKED	APPROVED	DATE	DRAWING NO.
			STR_34
		MARCH, 2026	SCALE
			NTS

ELECTRICAL DRAWINGS

ACADEMIC BLOCK

Owner - Khorlochhu Hydro Power Limited
Location - Doksum New Township, Trashiyangtse

Khorlochhu

SYMBOLS	Specifications
	60W 1200 sweep Ceiling fan
D	15W Led Ceiling Light
C	10W Led Ceiling Light
	20W Led Tube Light
	6A/10A Modular switches.
	5/6 Pin 16 Amps Switch/Socket Combined with indicator, 1x2000W
	Switch Board with 6A Socket.
	Data Outlet Socket,RJ45 Modular type
	Telephone Outlet Socket, RJ11.
SDB	Sub Distribution Board (SDB)
	Main Control Panel Board (MCPB)
JB	Television and Telephone Terminal Cabinet (Junction Box)

Notes 1:

1. Light points wiring shall be with 1.5sq.mm PVC insulated copper conductor
2. Light supply circuit shall be done with 2.5sq.mm PVC insulated copper conductor
3. Power circuits shall be done with 4sq.mm PVC insulated copper conductor.
4. Different conduit lines shall be used for wiring with different phases.
5. Power points wiring below window shall not be dropped from above but supplied from below the window seal level.
6. Light switchboards shall be 1400mm from finished floor level to top.
7. Power sockets shall be 400mm from finished floor level to top except in Kitchen or toilets/bathrooms (wet area) where the height shall be 1400mm from floor to bottom and for air condition the height shall be 1750mm from finished floor level.
8. No power point shall be looped.
9. Main switch boards are to be flushed in the wall 230mm below the ceiling level.

Notes 2: (As recommended by service providers)

1. Telephone wiring shall be with 0.5Sq.mm PVC insulated and sheathed copper conductor.
2. Ducting to be at least 500mm away from electrical cable routes.
3. To provide bridging where telephone and electric cables cross.
4. Telephone terminal cabinet shall be 300x300x150mm with hole punches to receive 25mm dia conduit on all four sides and mounted at 2500mm above floor level.
5. Cable ducting shall be provided with 25mm dia PVC conduit and shall be common for drawing of TV cables.
6. RJ-11 sockets shall be provided for telephone points.
7. To supply direct lines for all the rooms where points are marked, from the terminal cabinet.
8. The incoming lines shall be brought and connected to incoming side of the terminal cabinet from where lines to all the rooms commence

Khorlochhu

ELECTRICAL DRAWING

PROJECT TITLE	DRAWING TITLE
Construction of Doksum Primary School	NOTE_&_SPECIFICATION

NOTES

1. ALL DIMENSIONS ARE IN MILLIMETER & ELEVATION IN METER UNLESS SPECIFIED OTHERWISE.
2. ALL DIMENSIONS MEASURE UNFINISHED SURFACES UNLESS SPECIFIED OTHERWISE.
3. DIMENSIONS ARE TO BE READ AND NOT SCALED OFF.
4. ANY DISCREPANCIES IN THE DRAWING ARE TO BE BROUGHT TO THE IMMEDIATE NOTICE OF THE SUPERVISION TEAM.

CHECKED	APPROVED	DATE	DRAWING NO.
			EL_1
		MARCH, 2026	SCALE
			NTS

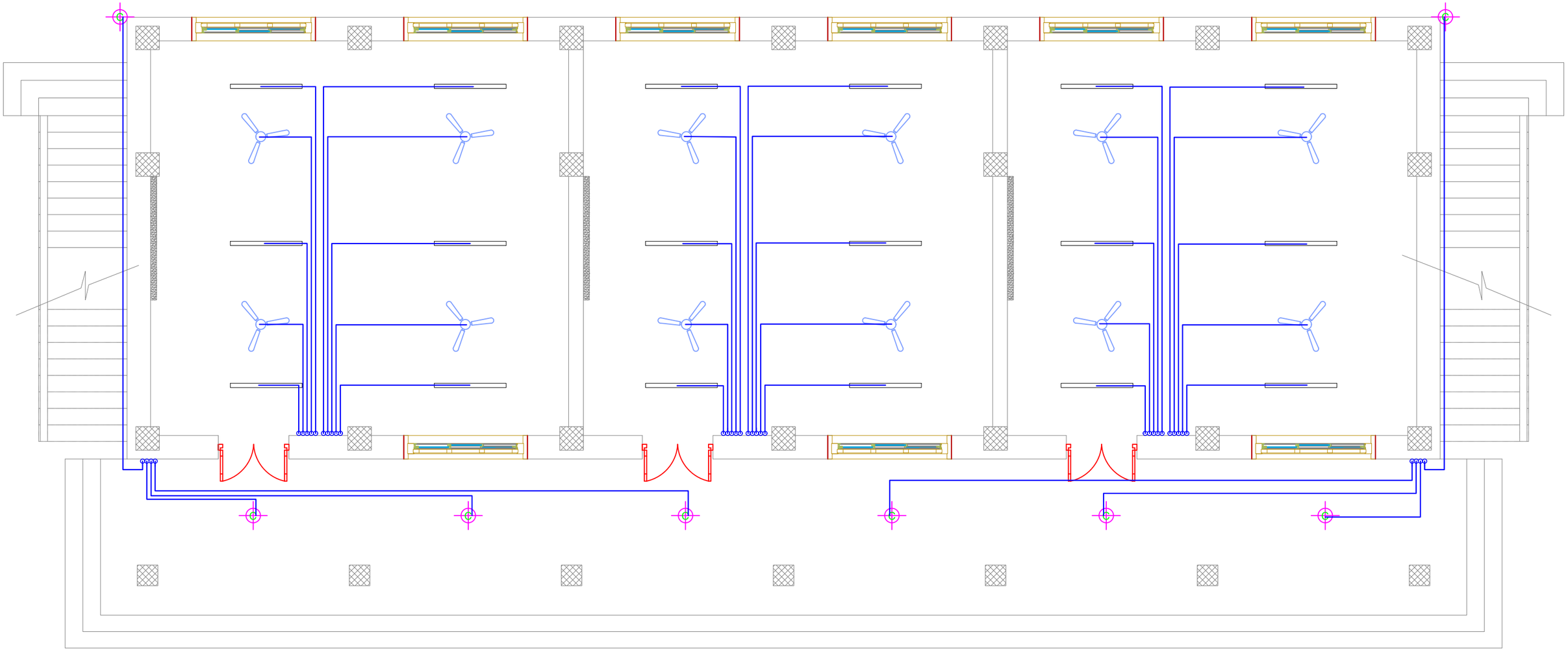

ELECTRICAL DRAWING

PROJECT TITLE	DRAWING TITLE
Construction of Doksum Primary School	FITTINGS_LAYOUT_GROUND_FLOOR

NOTES

1. ALL DIMENSIONS ARE IN MILLIMETER & ELEVATION IN METER UNLESS SPECIFIED OTHERWISE.
2. ALL DIMENSIONS MEASURE UNFINISHED SURFACES UNLESS SPECIFIED OTHERWISE.
3. DIMENSIONS ARE TO BE READ AND NOT SCALED OFF.
4. ANY DISCREPANCIES IN THE DRAWING ARE TO BE BROUGHT TO THE IMMEDIATE NOTICE OF THE SUPERVISION TEAM.

CHECKED	APPROVED	DATE	DRAWING NO.
			EL_2
		MARCH, 2026	SCALE
			NTS

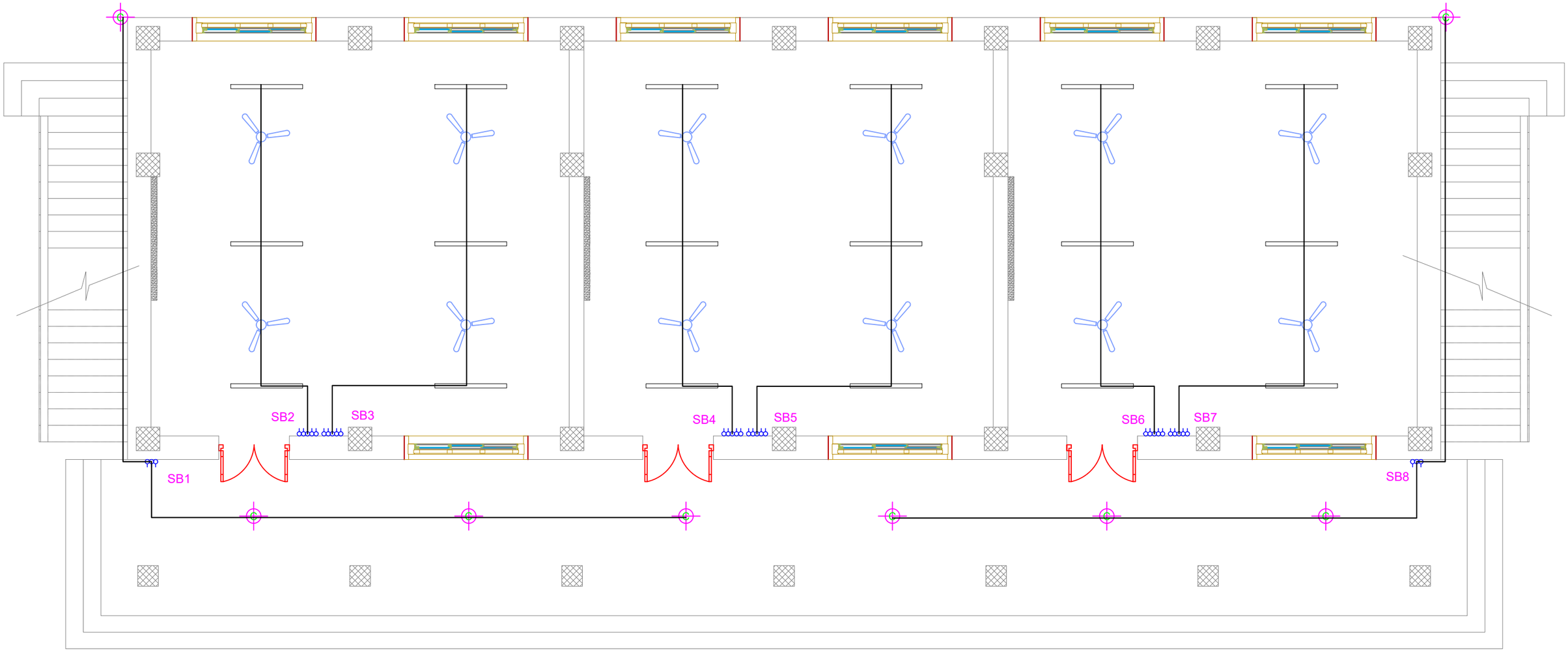

ELECTRICAL DRAWING

PROJECT TITLE	DRAWING TITLE
Construction of Doksum Primary School	FITTINGS_&_CONDUITS_LAYOUT_GROUND_FLOOR

NOTES

1. ALL DIMENSIONS ARE IN MILLIMETER & ELEVATION IN METER UNLESS SPECIFIED OTHERWISE.
2. ALL DIMENSIONS MEASURE UNFINISHED SURFACES UNLESS SPECIFIED OTHERWISE.
3. DIMENSIONS ARE TO BE READ AND NOT SCALED OFF.
4. ANY DISCREPANCIES IN THE DRAWING ARE TO BE BROUGHT TO THE IMMEDIATE NOTICE OF THE SUPERVISION TEAM.

CHECKED	APPROVED	DATE	DRAWING NO.
			EL_3
		MARCH, 2026	SCALE
			NTS

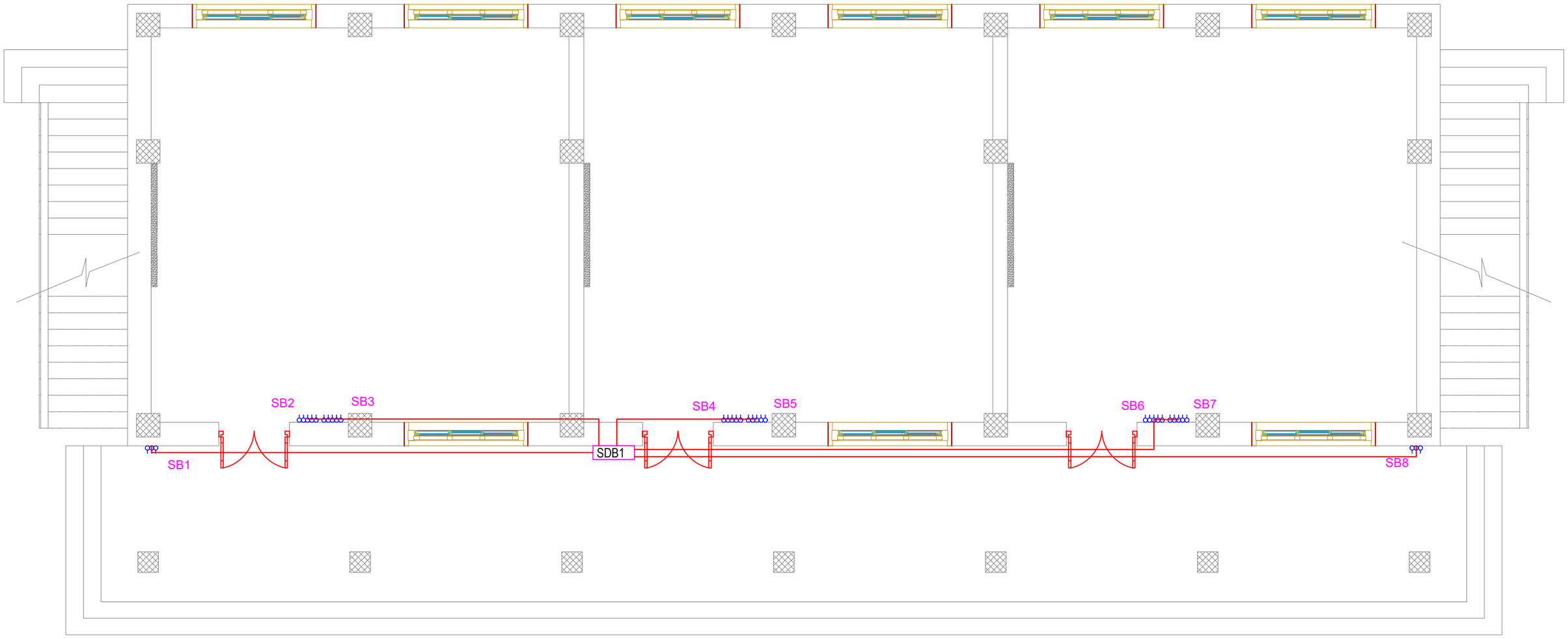

Khorlochhu

ELECTRICAL DRAWING

PROJECT TITLE	DRAWING TITLE
Construction of Doksum Primary School	LIGHT_CIRCUITS_LAYOUT_GROUND_FLOOR

NOTES

1. ALL DIMENSIONS ARE IN MILLIMETER & ELEVATION IN METER UNLESS SPECIFIED OTHERWISE.
2. ALL DIMENSIONS MEASURE UNFINISHED SURFACES UNLESS SPECIFIED OTHERWISE.
3. DIMENSIONS ARE TO BE READ AND NOT SCALED OFF.
4. ANY DISCREPANCIES IN THE DRAWING ARE TO BE BROUGHT TO THE IMMEDIATE NOTICE OF THE SUPERVISION TEAM.

CHECKED	APPROVED	DATE	DRAWING NO.
			EL_4
		MARCH, 2026	SCALE
			NTS

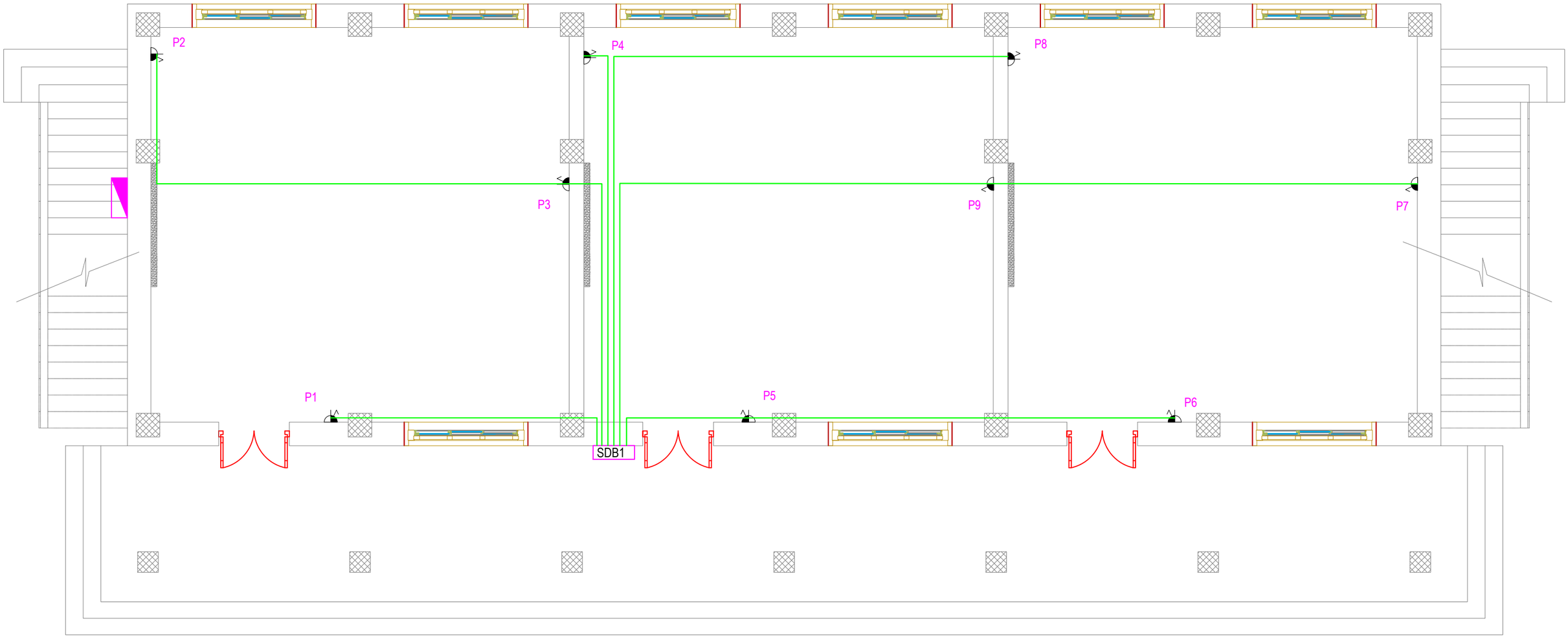

Khorlochhu

ELECTRICAL DRAWING

PROJECT TITLE	DRAWING TITLE
Construction of Doksum Primary School	POWER_SOCKET_OUTLET_&_CONDUITS_LAYOUT_GROUND_FLOOR

NOTES

1. ALL DIMENSIONS ARE IN MILLIMETER & ELEVATION IN METER UNLESS SPECIFIED OTHERWISE.
2. ALL DIMENSIONS MEASURE UNFINISHED SURFACES UNLESS SPECIFIED OTHERWISE.
3. DIMENSIONS ARE TO BE READ AND NOT SCALED OFF.
4. ANY DISCREPANCIES IN THE DRAWING ARE TO BE BROUGHT TO THE IMMEDIATE NOTICE OF THE SUPERVISION TEAM.

CHECKED	APPROVED	DATE	DRAWING NO.
			EL_5
		MARCH, 2026	SCALE
			NTS

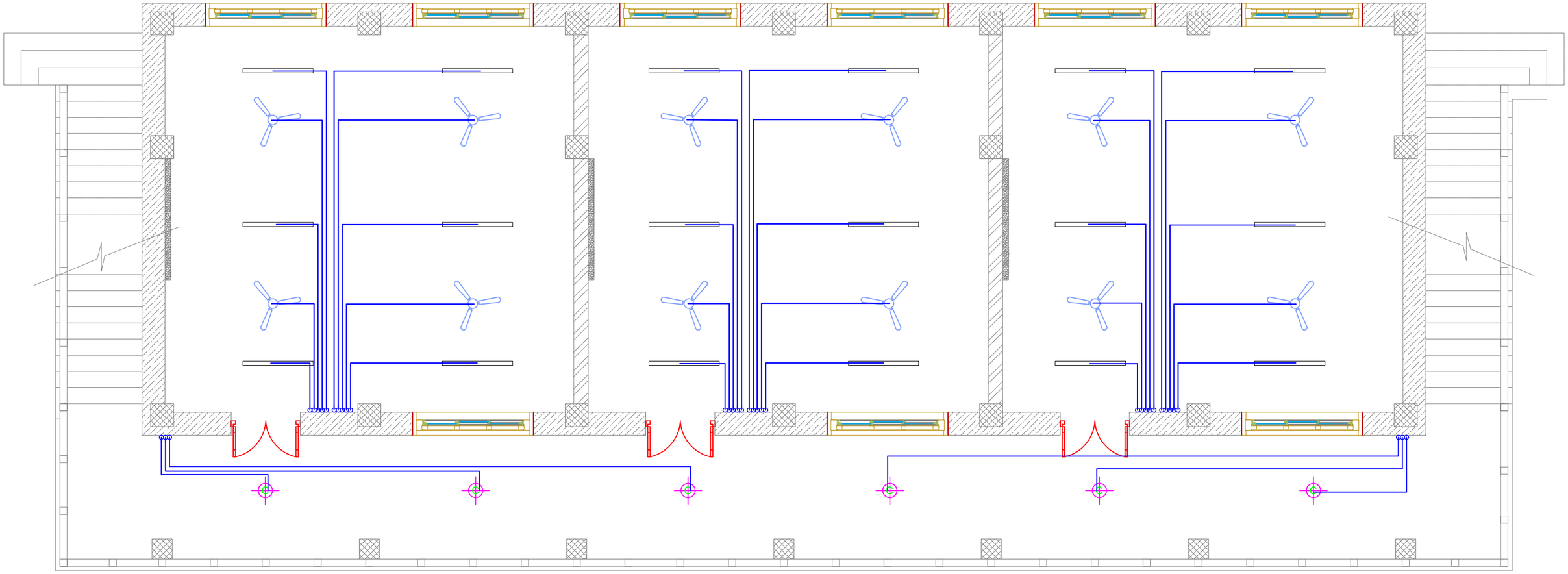

ELECTRICAL DRAWING

PROJECT TITLE	DRAWING TITLE
Construction of Doksum Primary School	FITTINGS_LAYOUT_FIRST_FLOOR

NOTES

1. ALL DIMENSIONS ARE IN MILLIMETER & ELEVATION IN METER UNLESS SPECIFIED OTHERWISE.
2. ALL DIMENSIONS MEASURE UNFINISHED SURFACES UNLESS SPECIFIED OTHERWISE.
3. DIMENSIONS ARE TO BE READ AND NOT SCALED OFF.
4. ANY DISCREPANCIES IN THE DRAWING ARE TO BE BROUGHT TO THE IMMEDIATE NOTICE OF THE SUPERVISION TEAM.

CHECKED	APPROVED	DATE	DRAWING NO.
			EL_6
		MARCH, 2026	SCALE
			NTS

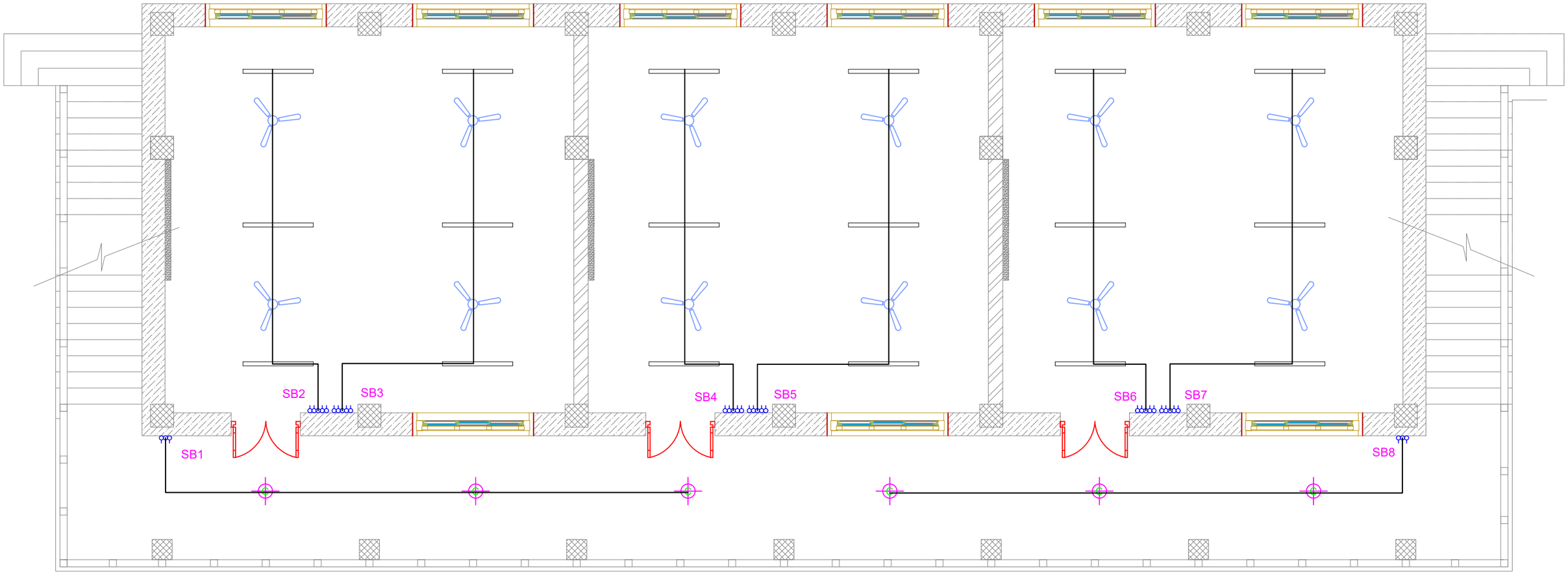

ELECTRICAL DRAWING

PROJECT TITLE	DRAWING TITLE
Construction of Doksum Primary School	FITTINGS_&_CONDUCT_LAYOUT_FIRST_FLOOR

NOTES

1. ALL DIMENSIONS ARE IN MILLIMETER & ELEVATION IN METER UNLESS SPECIFIED OTHERWISE.
2. ALL DIMENSIONS MEASURE UNFINISHED SURFACES UNLESS SPECIFIED OTHERWISE.
3. DIMENSIONS ARE TO BE READ AND NOT SCALED OFF.
4. ANY DISCREPANCIES IN THE DRAWING ARE TO BE BROUGHT TO THE IMMEDIATE NOTICE OF THE SUPERVISION TEAM.

CHECKED	APPROVED	DATE	DRAWING NO.
			EL_7
		MARCH, 2026	SCALE
			NTS

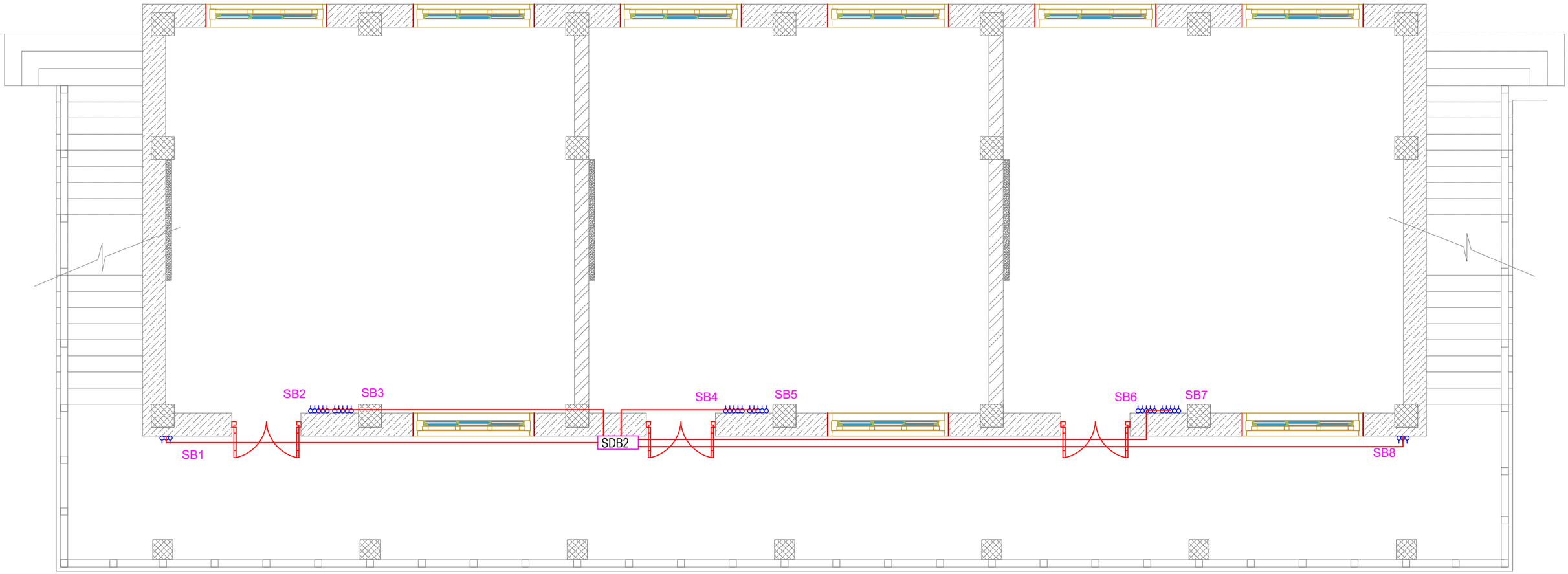

ELECTRICAL DRAWING

PROJECT TITLE	DRAWING TITLE
Construction of Doksum Primary School	LIGHT_CIRCUITS_LAYOUT_FIRST_FLOOR

NOTES

1. ALL DIMENSIONS ARE IN MILLIMETER & ELEVATION IN METER UNLESS SPECIFIED OTHERWISE.
2. ALL DIMENSIONS MEASURE UNFINISHED SURFACES UNLESS SPECIFIED OTHERWISE.
3. DIMENSIONS ARE TO BE READ AND NOT SCALED OFF.
4. ANY DISCREPANCIES IN THE DRAWING ARE TO BE BROUGHT TO THE IMMEDIATE NOTICE OF THE SUPERVISION TEAM.

CHECKED	APPROVED	DATE	DRAWING NO.
			EL_8
		MARCH, 2026	SCALE
			NTS

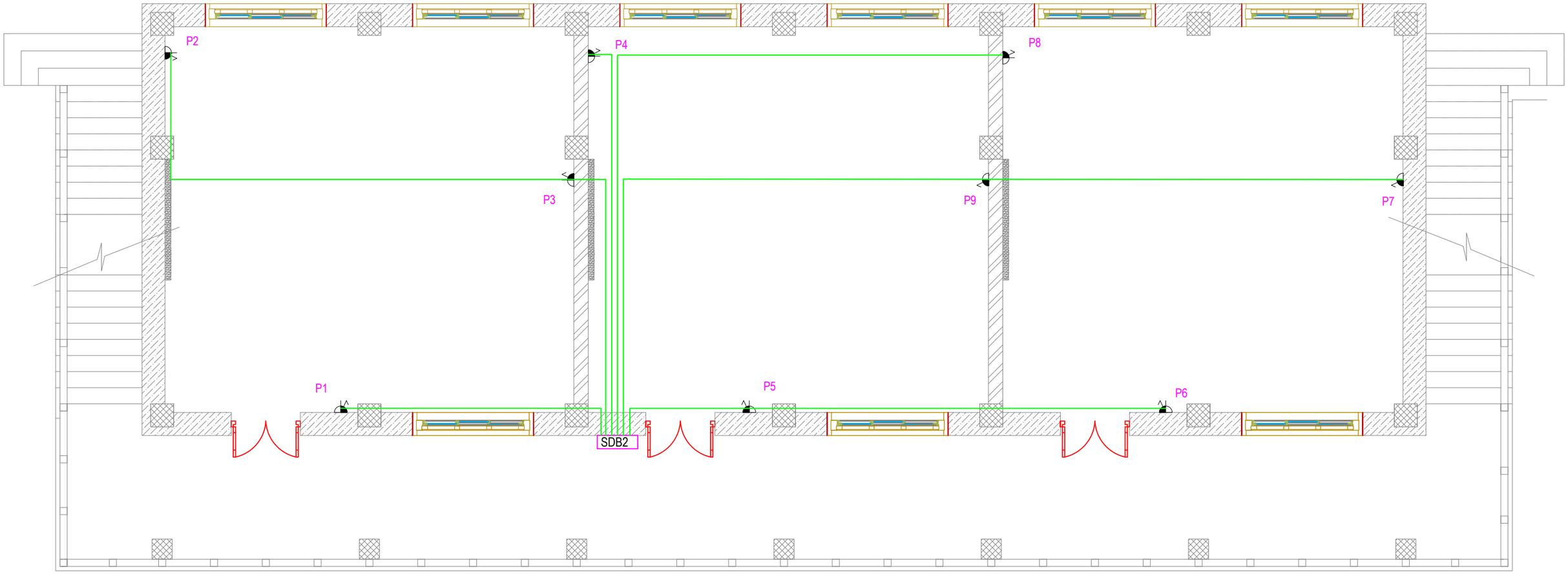

Khorlochhu

ELECTRICAL DRAWING

PROJECT TITLE	DRAWING TITLE
Construction of Doksum Primary School	POWER_SOCKET_OUTLET_&_CONDUITS_LAYOUT_FIRST_FLOOR

NOTES

1. ALL DIMENSIONS ARE IN MILLIMETER & ELEVATION IN METER UNLESS SPECIFIED OTHERWISE.
2. ALL DIMENSIONS MEASURE UNFINISHED SURFACES UNLESS SPECIFIED OTHERWISE.
3. DIMENSIONS ARE TO BE READ AND NOT SCALED OFF.
4. ANY DISCREPANCIES IN THE DRAWING ARE TO BE BROUGHT TO THE IMMEDIATE NOTICE OF THE SUPERVISION TEAM.

CHECKED	APPROVED	DATE	DRAWING NO.
			EL_9
		MARCH, 2026	SCALE
			NTS

SDB-1 GROUND FLOOR

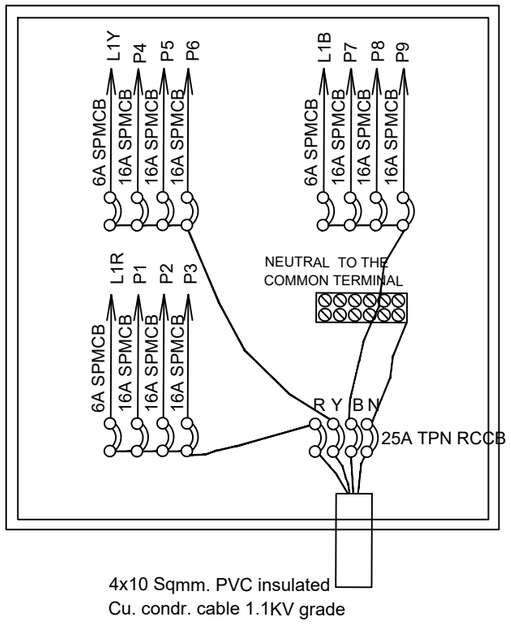

4 WAY TPN DB, DOUBLE DOOR TYPE, & 25A TPN RCCB WITH FOLLOWING OUTGOING:
6A SPMCB - 3 NOs.
16A SPMCB - 9 NOs.

BALANCE LOAD IN WATTS

R-PHASE	Y-PHASE	B-PHASE
L1- 384	L1- 360	L1-384
P1- 2000	P4- 2000	P7-2000
P2- 2000	P5- 2000	P8-2000
P3- 2000	P6- 2000	P9-2000
6,384	6,360	6,384

L1R= SB1,SB2,SB3
L1Y= SB4,SB5
L1B= SB6,SB7,SB8

Connected load= 19,128 W
Demand load(L.F- 70%)= 13,389 W

SDB-2 FIRST FLOOR

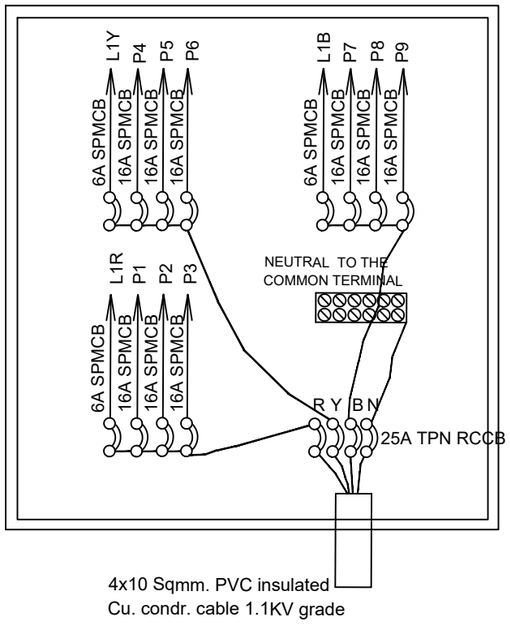

4 WAY TPN DB, DOUBLE DOOR TYPE, & 25A TPN RCCB WITH FOLLOWING OUTGOING:
6A SPMCB - 3 NOs.
16A SPMCB - 9 NOs.

BALANCE LOAD IN WATTS

R-PHASE	Y-PHASE	B-PHASE
L1- 378	L1- 360	L1-378
P1- 2000	P4- 2000	P7-2000
P2- 2000	P5- 2000	P8-2000
P3- 2000	P6- 2000	P9-2000
6,378	6,360	6,378

L1R= SB1,SB2,SB3
L1Y= SB4,SB5
L1B= SB6,SB7,SB8

Connected load= 19,116 W
Demand load(L.F- 70%)= 13,381 W

Khorlochhu

ELECTRICAL DRAWING

PROJECT TITLE	DRAWING TITLE
Construction of Doksum Primary School	SDB_DETAILS

NOTES

1. ALL DIMENSIONS ARE IN MILLIMETER & ELEVATION IN METER UNLESS SPECIFIED OTHERWISE.
2. ALL DIMENSIONS MEASURE UNFINISHED SURFACES UNLESS SPECIFIED OTHERWISE.
3. DIMENSIONS ARE TO BE READ AND NOT SCALED OFF.
4. ANY DISCREPANCIES IN THE DRAWING ARE TO BE BROUGHT TO THE IMMEDIATE NOTICE OF THE SUPERVISION TEAM.

CHECKED	APPROVED	DATE	DRAWING NO.
			EL_10
		MARCH, 2026	SCALE
			NTS

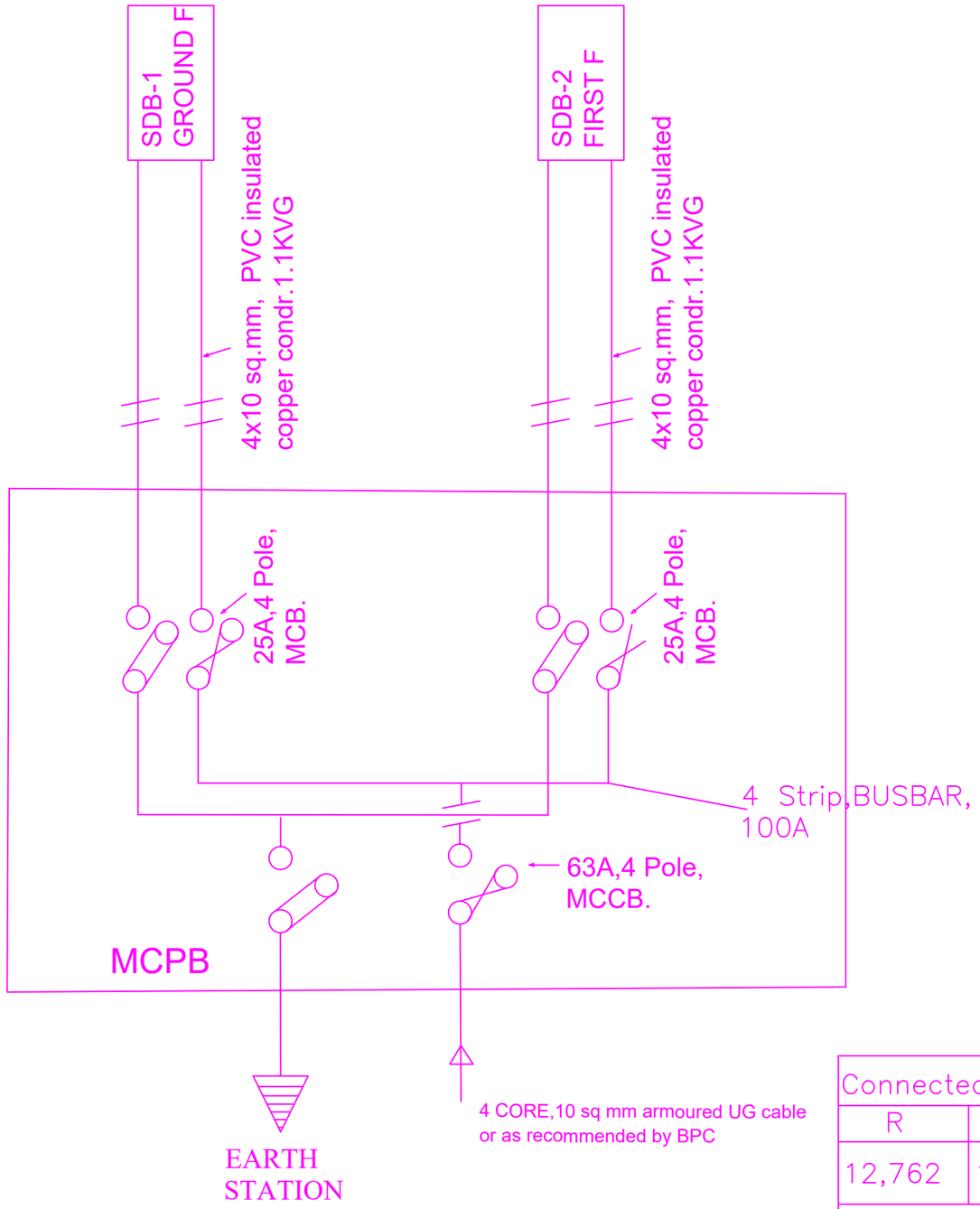

Connected load (watt)			Total load
R	Y	B	
12,762	12,720	12,762	38,244
Demand load (considering 0.7 load factor)=26,771 W			

Khorlochhu

ELECTRICAL DRAWING

PROJECT TITLE	DRAWING TITLE
Construction of Doksum Primary School	MDB_DETAILS

NOTES

1. ALL DIMENSIONS ARE IN MILLIMETER & ELEVATION IN METER UNLESS SPECIFIED OTHERWISE.
2. ALL DIMENSIONS MEASURE UNFINISHED SURFACES UNLESS SPECIFIED OTHERWISE.
3. DIMENSIONS ARE TO BE READ AND NOT SCALED OFF.
4. ANY DISCREPANCIES IN THE DRAWING ARE TO BE BROUGHT TO THE IMMEDIATE NOTICE OF THE SUPERVISION TEAM.

CHECKED	APPROVED	DATE	DRAWING NO.
			EL_11
		MARCH, 2026	SCALE
			NTS

ARCHITECTURAL DRAWINGS

MULTI PURPOSE HALL

Owner - Khorlochhu Hydro Power Limited
Location - Doksum New Township, Trashiyangtse

Khorlochhu

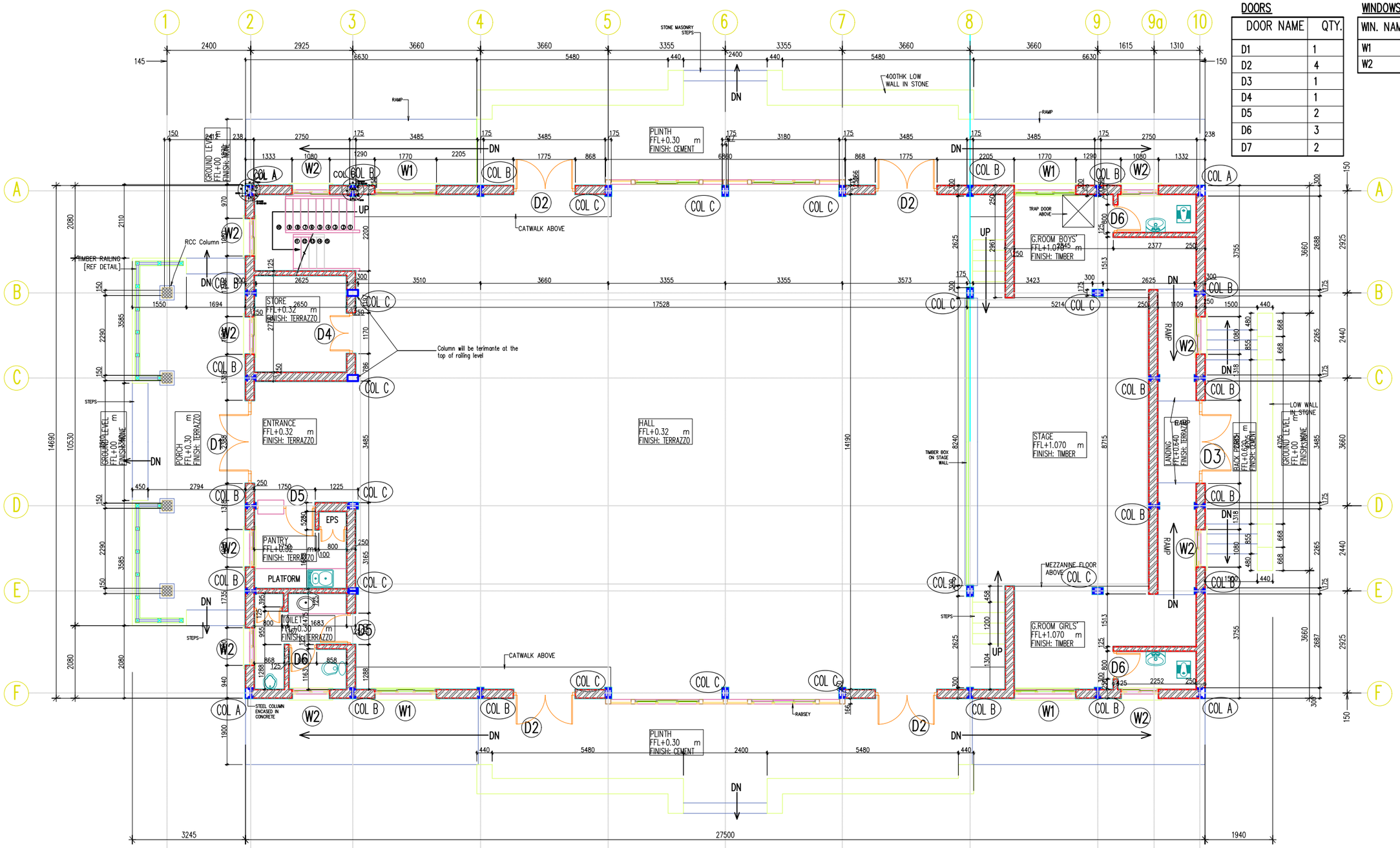

DOOR-WINDOW SCHEDULE

DOORS

DOOR NAME	QTY.
D1	1
D2	4
D3	1
D4	1
D5	2
D6	3
D7	2

WINDOWS

WIN. NAME	QTY.
W1	4
W2	10

Khorlochhu

ARCHITECTURAL DRAWING

PROJECT TITLE	DRAWING TITLE
Construction of Doksum Primary School	FLOOR_PLAN

NOTES

1. ALL DIMENSIONS ARE IN MILLIMETER & ELEVATION IN METER UNLESS SPECIFIED OTHERWISE.
2. ALL DIMENSIONS MEASURE UNFINISHED SURFACES UNLESS SPECIFIED OTHERWISE.
3. DIMENSIONS ARE TO BE READ AND NOT SCALED OFF.
4. ANY DISCREPANCIES IN THE DRAWING ARE TO BE BROUGHT TO THE IMMEDIATE NOTICE OF THE SUPERVISION TEAM.

CHECKED	APPROVED	DATE	DRAWING NO.
			AR_01
		MARCH, 2026	SCALE
			NTS

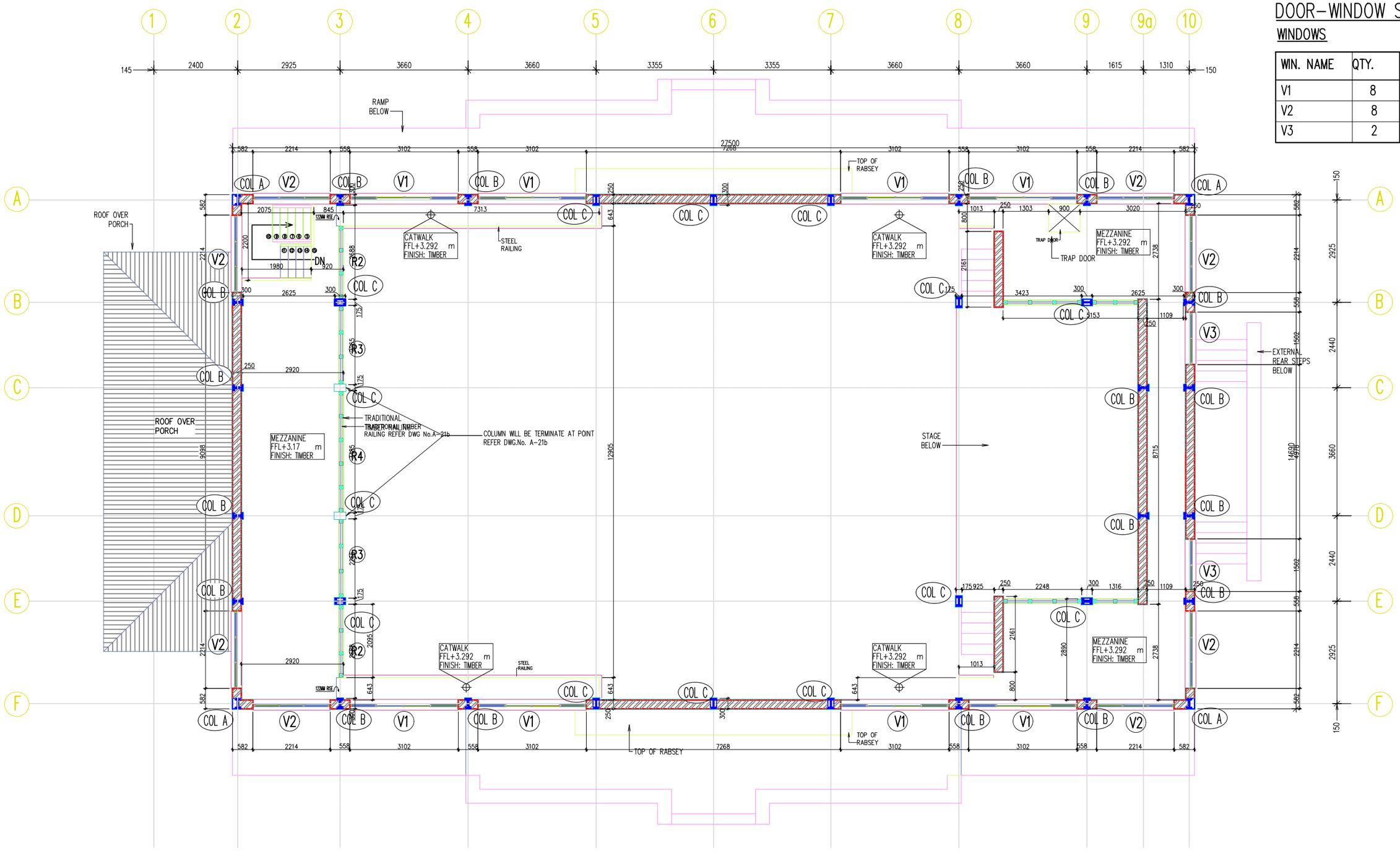

DOOR-WINDOW SCHEDULE

WINDOWS

WIN. NAME	QTY.
V1	8
V2	8
V3	2

ARCHITECTURAL DRAWING

PROJECT TITLE	DRAWING TITLE
Construction of Doksum Primary School	MEZZANINE_FLOOR_PLAN

Khorlochhu

NOTES

1. ALL DIMENSIONS ARE IN MILLIMETER & ELEVATION IN METER UNLESS SPECIFIED OTHERWISE.
2. ALL DIMENSIONS MEASURE UNFINISHED SURFACES UNLESS SPECIFIED OTHERWISE.
3. DIMENSIONS ARE TO BE READ AND NOT SCALED OFF.
4. ANY DISCREPANCIES IN THE DRAWING ARE TO BE BROUGHT TO THE IMMEDIATE NOTICE OF THE SUPERVISION TEAM.

CHECKED	APPROVED	DATE	DRAWING NO.
			AR_02
		MARCH, 2026	SCALE
			NTS

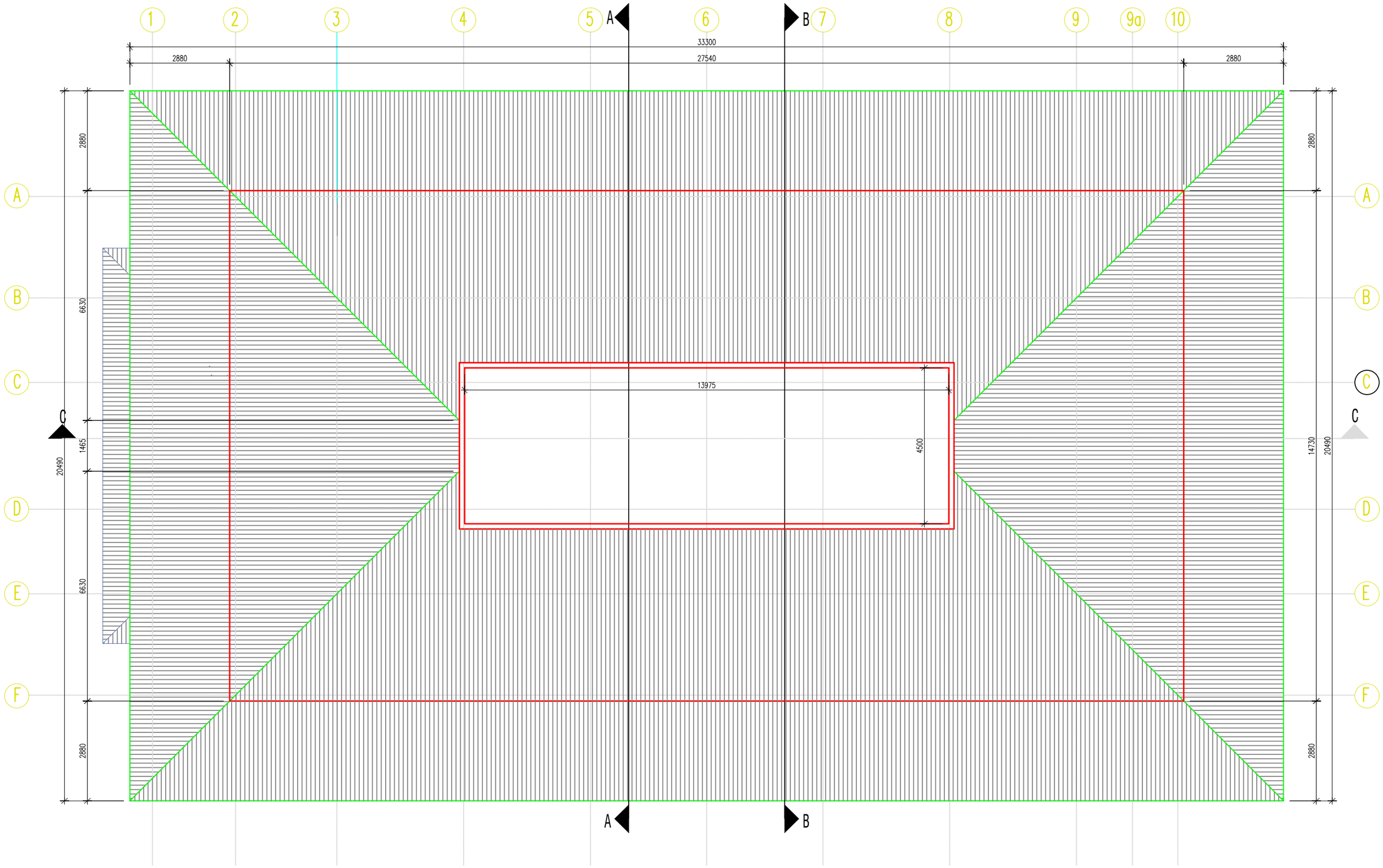

ARCHITECTURAL DRAWING

PROJECT TITLE	DRAWING TITLE
Construction of Doksum Primary School	LOWER_ROOF_PLAN

NOTES

1. ALL DIMENSIONS ARE IN MILLIMETER & ELEVATION IN METER UNLESS SPECIFIED OTHERWISE.
2. ALL DIMENSIONS MEASURE UNFINISHED SURFACES UNLESS SPECIFIED OTHERWISE.
3. DIMENSIONS ARE TO BE READ AND NOT SCALED OFF.
4. ANY DISCREPANCIES IN THE DRAWING ARE TO BE BROUGHT TO THE IMMEDIATE NOTICE OF THE SUPERVISION TEAM.

CHECKED	APPROVED	DATE	DRAWING NO.
			AR_03
		MARCH, 2026	SCALE
			NTS

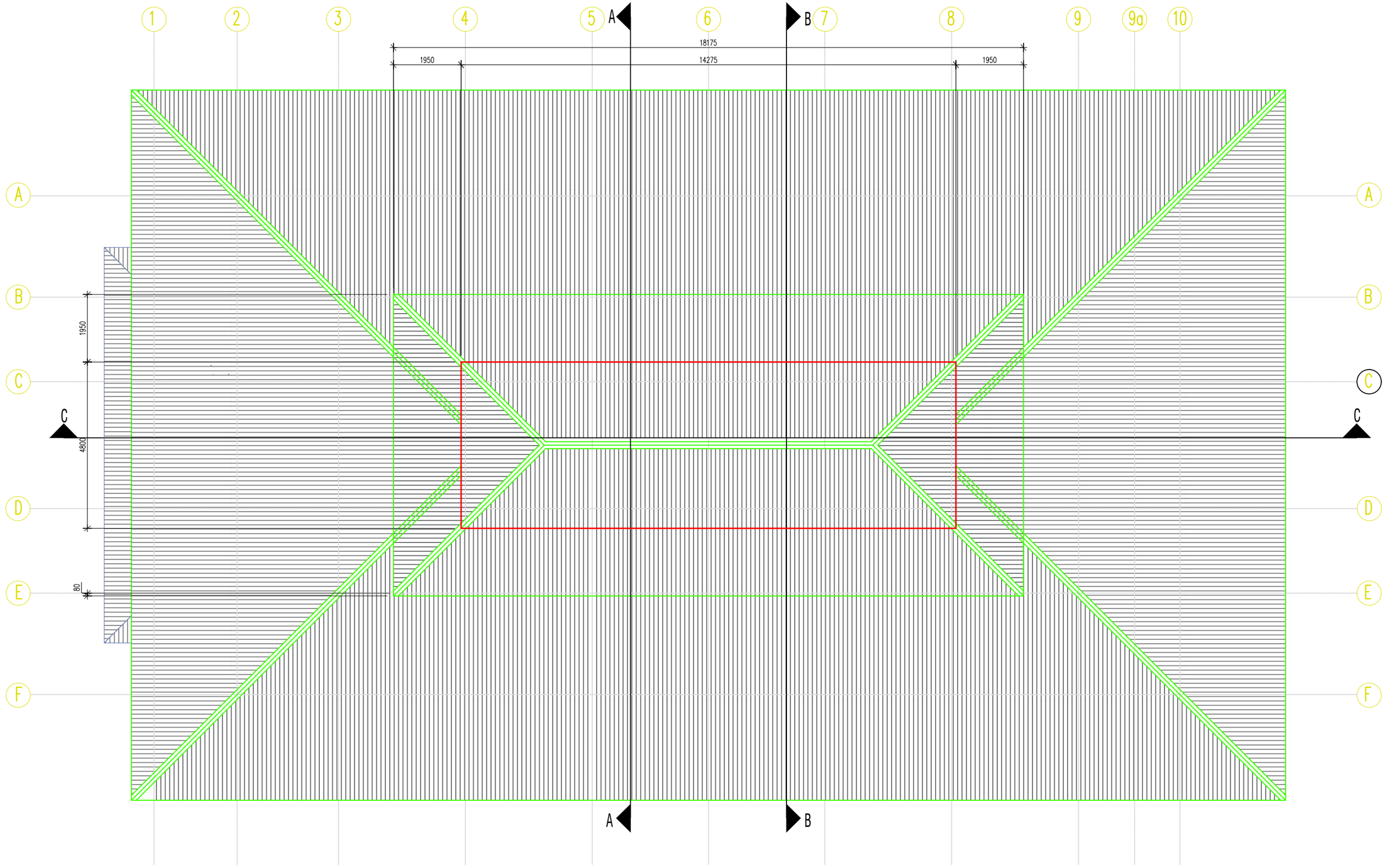

ARCHITECTURAL DRAWING

PROJECT TITLE	DRAWING TITLE
Construction of Doksum Primary School	ROOF_PLAN

NOTES

1. ALL DIMENSIONS ARE IN MILLIMETER & ELEVATION IN METER UNLESS SPECIFIED OTHERWISE.
2. ALL DIMENSIONS MEASURE UNFINISHED SURFACES UNLESS SPECIFIED OTHERWISE.
3. DIMENSIONS ARE TO BE READ AND NOT SCALED OFF.
4. ANY DISCREPANCIES IN THE DRAWING ARE TO BE BROUGHT TO THE IMMEDIATE NOTICE OF THE SUPERVISION TEAM.

CHECKED	APPROVED	DATE	DRAWING NO.
			AR_04
		MARCH, 2026	SCALE
			NTS

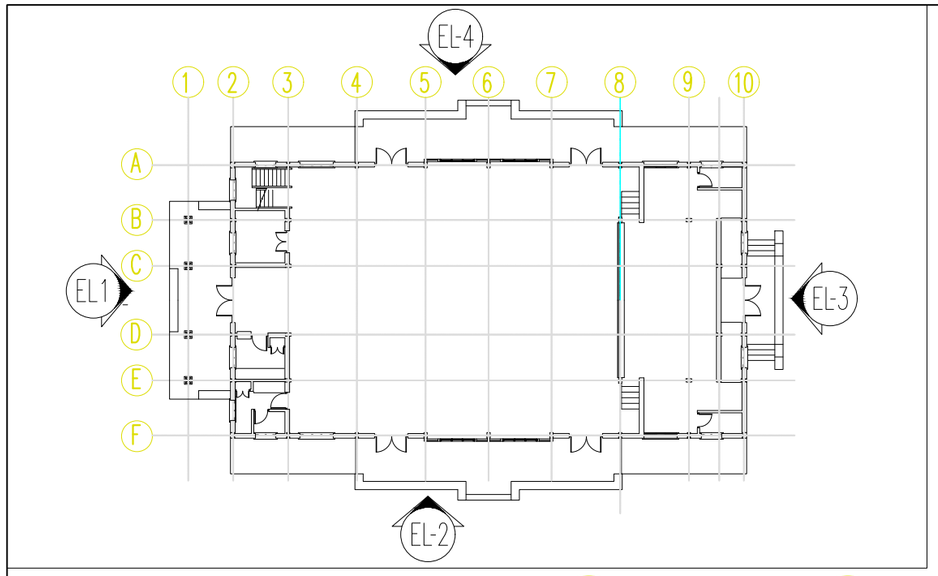

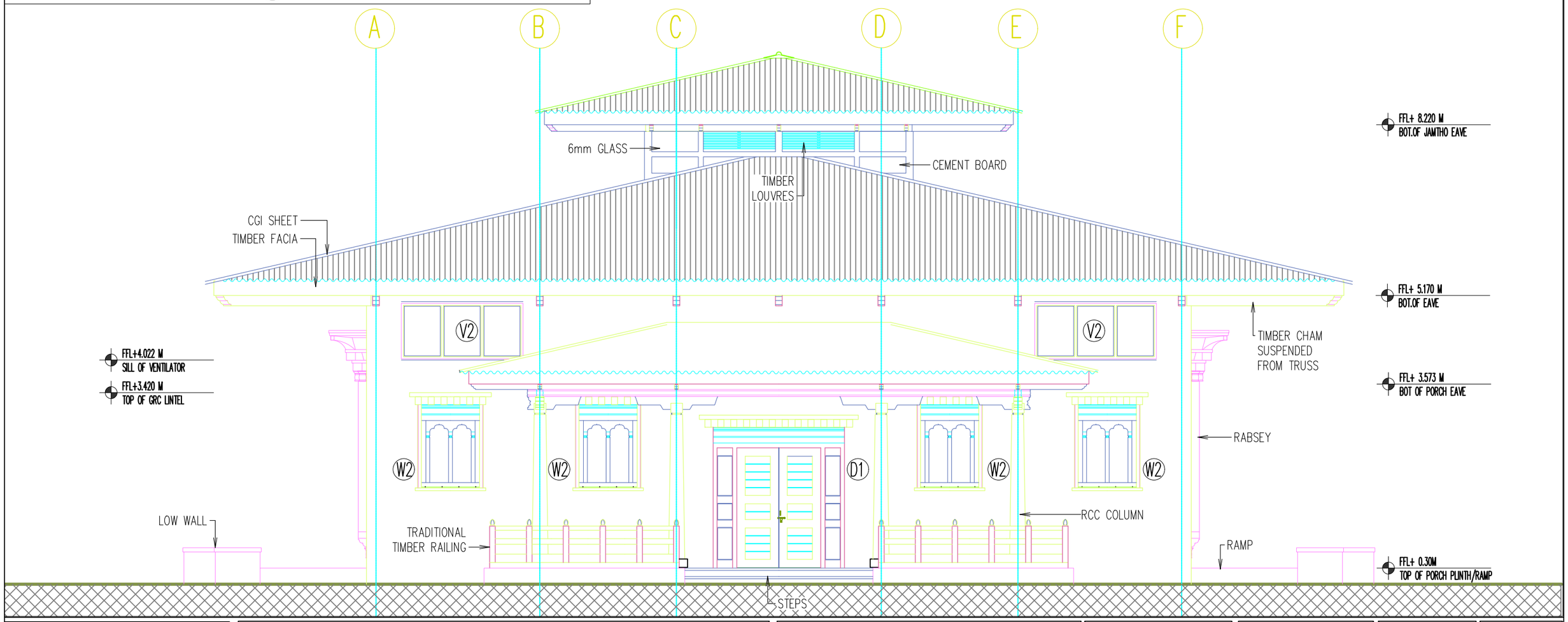

Khorlochhu

ARCHITECTURAL DRAWING

PROJECT TITLE	DRAWING TITLE
Construction of Doksum Primary School	ELEVATION_1

NOTES

1. ALL DIMENSIONS ARE IN MILLIMETER & ELEVATION IN METER UNLESS SPECIFIED OTHERWISE.
2. ALL DIMENSIONS MEASURE UNFINISHED SURFACES UNLESS SPECIFIED OTHERWISE.
3. DIMENSIONS ARE TO BE READ AND NOT SCALED OFF.
4. ANY DISCREPANCIES IN THE DRAWING ARE TO BE BROUGHT TO THE IMMEDIATE NOTICE OF THE SUPERVISION TEAM.

CHECKED	APPROVED	DATE	DRAWING NO.
			AR_05
		MARCH, 2026	SCALE
			NTS

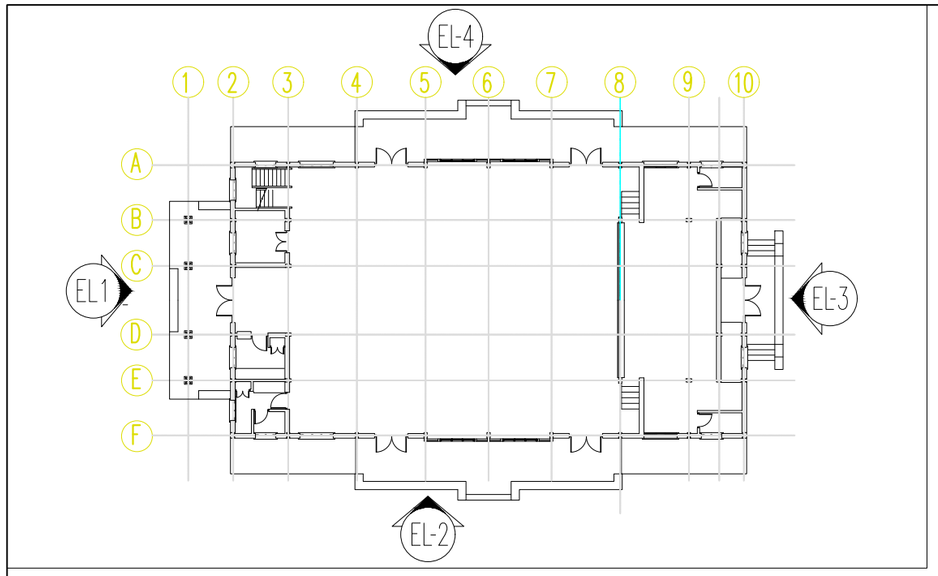

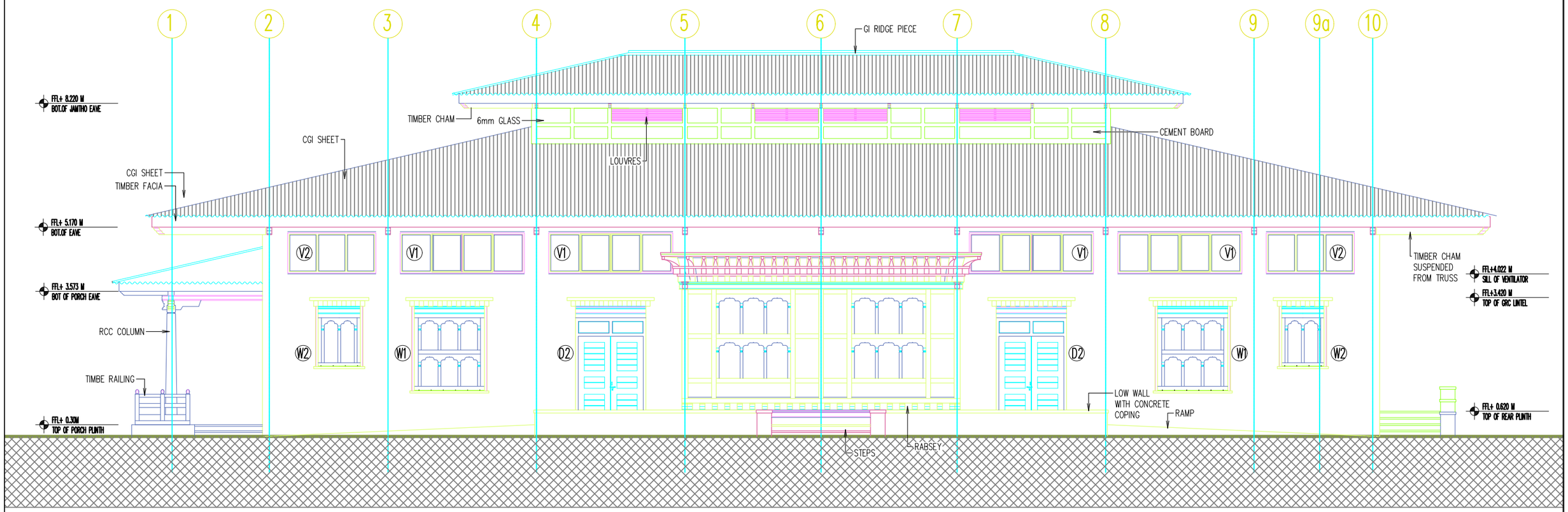

Khorlochhu

ARCHITECTURAL DRAWING

PROJECT TITLE	DRAWING TITLE
Construction of Doksum Primary School	ELEVATION_2

NOTES

1. ALL DIMENSIONS ARE IN MILLIMETER & ELEVATION IN METER UNLESS SPECIFIED OTHERWISE.
2. ALL DIMENSIONS MEASURE UNFINISHED SURFACES UNLESS SPECIFIED OTHERWISE.
3. DIMENSIONS ARE TO BE READ AND NOT SCALED OFF.
4. ANY DISCREPANCIES IN THE DRAWING ARE TO BE BROUGHT TO THE IMMEDIATE NOTICE OF THE SUPERVISION TEAM.

CHECKED	APPROVED	DATE	DRAWING NO.
			AR_06
		MARCH, 2026	SCALE
			NTS

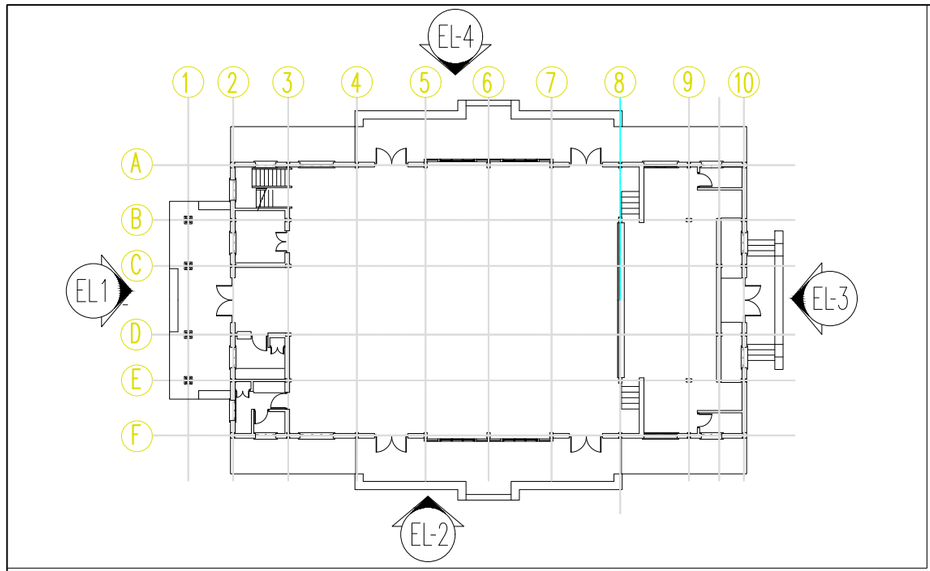

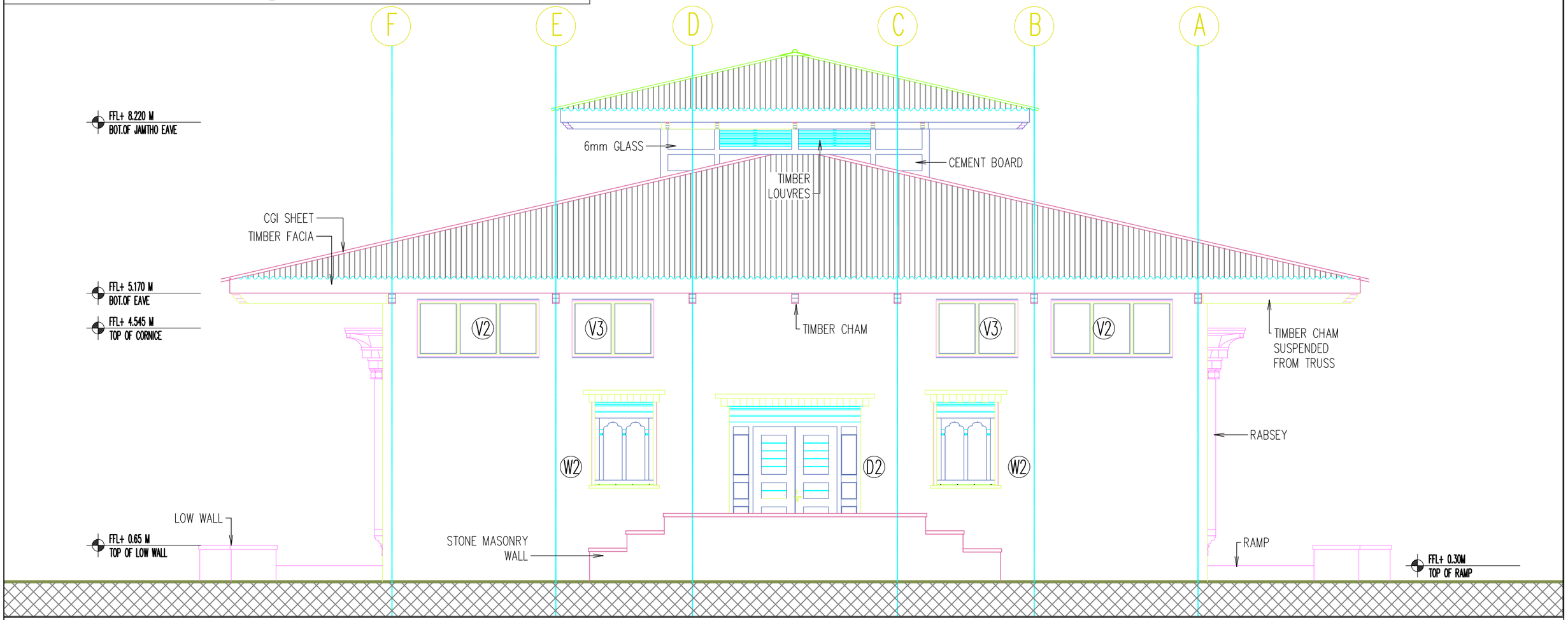

Khorlochhu

ARCHITECTURAL DRAWING

PROJECT TITLE	DRAWING TITLE
Construction of Doksum Primary School	ELEVATION_3

NOTES

1. ALL DIMENSIONS ARE IN MILLIMETER & ELEVATION IN METER UNLESS SPECIFIED OTHERWISE.
2. ALL DIMENSIONS MEASURE UNFINISHED SURFACES UNLESS SPECIFIED OTHERWISE.
3. DIMENSIONS ARE TO BE READ AND NOT SCALED OFF.
4. ANY DISCREPANCIES IN THE DRAWING ARE TO BE BROUGHT TO THE IMMEDIATE NOTICE OF THE SUPERVISION TEAM.

CHECKED	APPROVED	DATE	DRAWING NO.
			AR_07
		MARCH, 2026	SCALE
			NTS

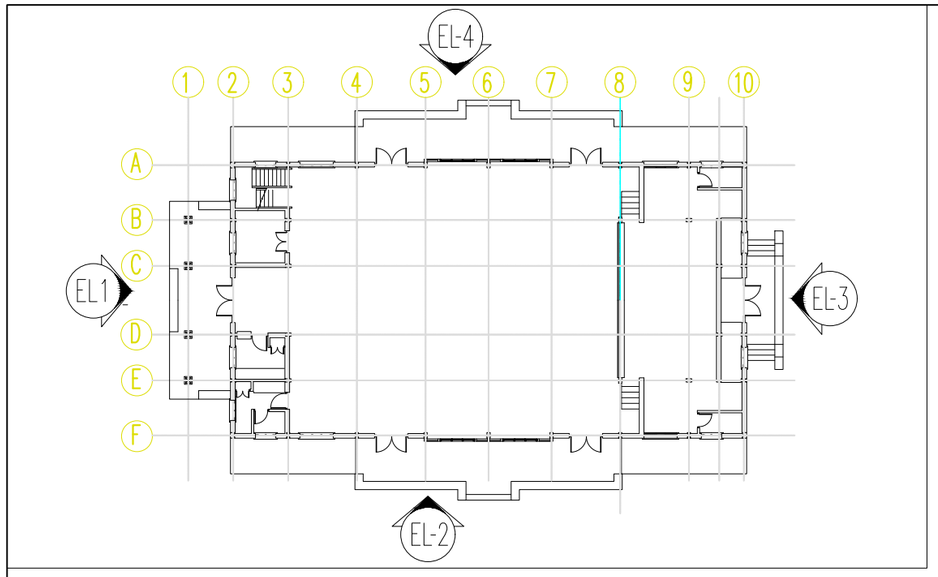

Khorlochhu

ARCHITECTURAL DRAWING

PROJECT TITLE	DRAWING TITLE
Construction of Doksum Primary School	ELEVATION_4

NOTES

1. ALL DIMENSIONS ARE IN MILLIMETER & ELEVATION IN METER UNLESS SPECIFIED OTHERWISE.
2. ALL DIMENSIONS MEASURE UNFINISHED SURFACES UNLESS SPECIFIED OTHERWISE.
3. DIMENSIONS ARE TO BE READ AND NOT SCALED OFF.
4. ANY DISCREPANCIES IN THE DRAWING ARE TO BE BROUGHT TO THE IMMEDIATE NOTICE OF THE SUPERVISION TEAM.

CHECKED	APPROVED	DATE	DRAWING NO.
			AR_08
		MARCH, 2026	SCALE
			NTS

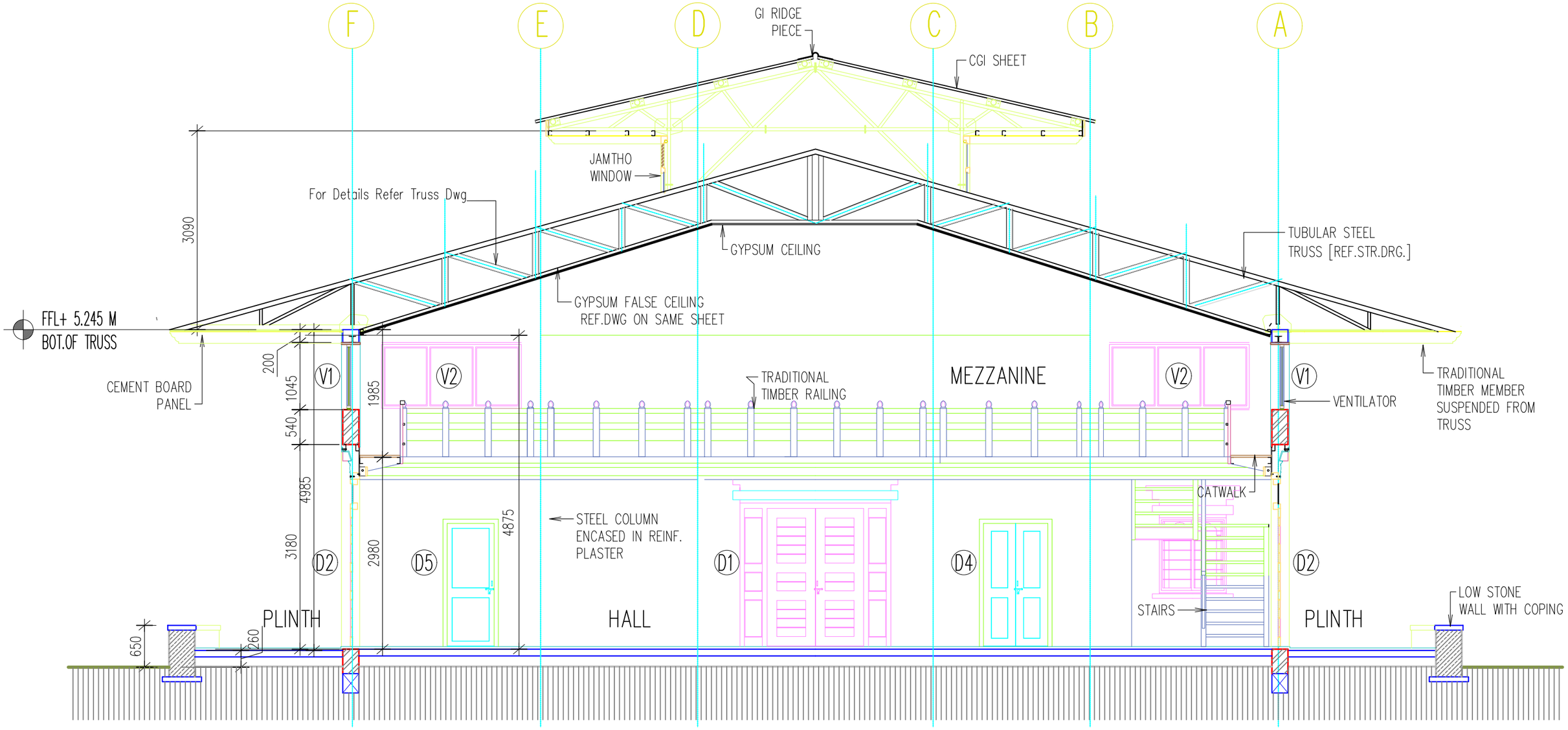

Khorlochhu

ARCHITECTURAL DRAWING

PROJECT TITLE	DRAWING TITLE
Construction of Doksum Primary School	SECTION_THROUGH_MEZZANINE_FLOOR

NOTES

1. ALL DIMENSIONS ARE IN MILLIMETER & ELEVATION IN METER UNLESS SPECIFIED OTHERWISE.
2. ALL DIMENSIONS MEASURE UNFINISHED SURFACES UNLESS SPECIFIED OTHERWISE.
3. DIMENSIONS ARE TO BE READ AND NOT SCALED OFF.
4. ANY DISCREPANCIES IN THE DRAWING ARE TO BE BROUGHT TO THE IMMEDIATE NOTICE OF THE SUPERVISION TEAM.

CHECKED	APPROVED	DATE	DRAWING NO.
			AR_09
		MARCH, 2026	SCALE
			NTS

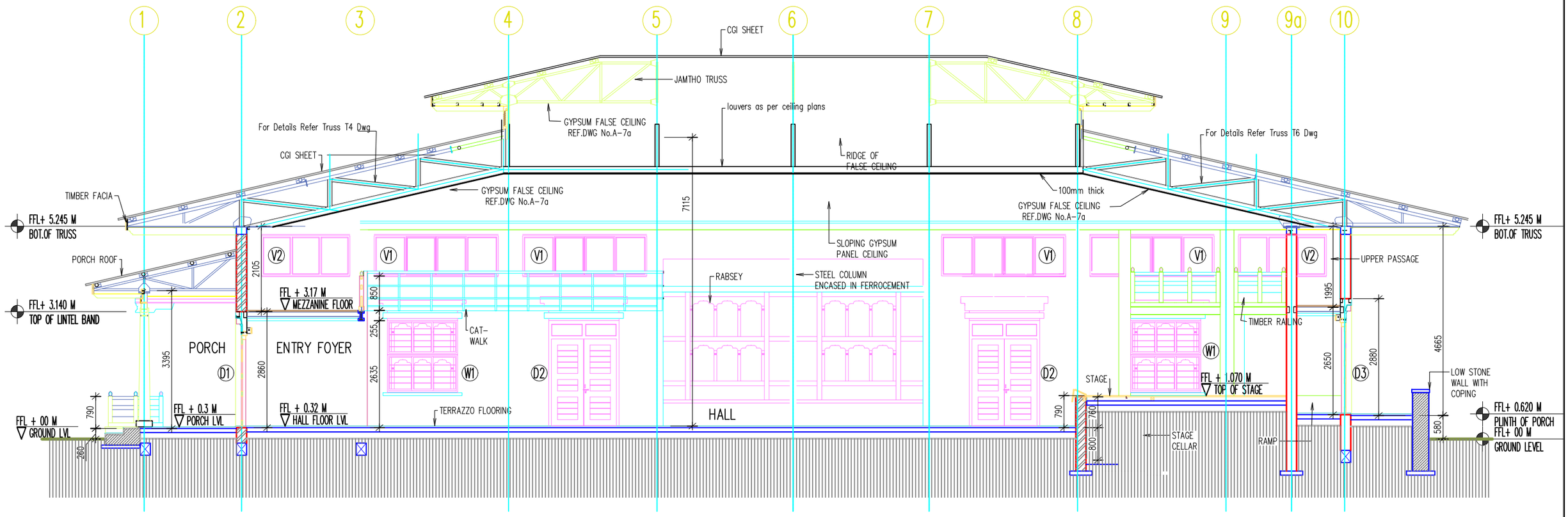

Khorlochhu

ARCHITECTURAL DRAWING

PROJECT TITLE	DRAWING TITLE
Construction of Doksum Primary School	SECTION

NOTES

1. ALL DIMENSIONS ARE IN MILLIMETER & ELEVATION IN METER UNLESS SPECIFIED OTHERWISE.
2. ALL DIMENSIONS MEASURE UNFINISHED SURFACES UNLESS SPECIFIED OTHERWISE.
3. DIMENSIONS ARE TO BE READ AND NOT SCALED OFF.
4. ANY DISCREPANCIES IN THE DRAWING ARE TO BE BROUGHT TO THE IMMEDIATE NOTICE OF THE SUPERVISION TEAM.

CHECKED	APPROVED	DATE	DRAWING NO.
			AR_10
		MARCH, 2026	SCALE
			NTS

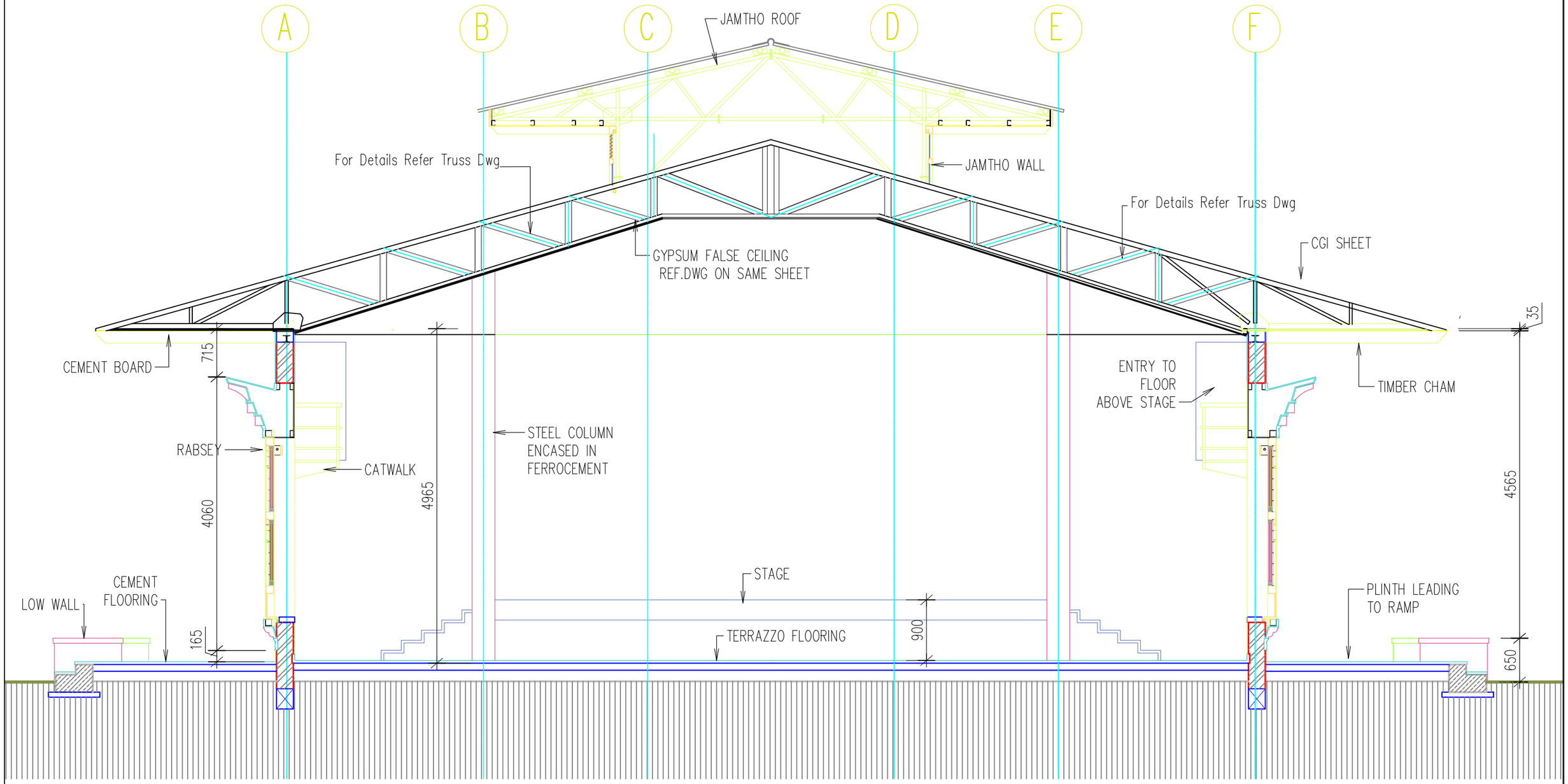

Khorlochhu

ARCHITECTURAL DRAWING

PROJECT TITLE	DRAWING TITLE
Construction of Doksum Primary School	SECTION_THROUGH-STAGE

NOTES

1. ALL DIMENSIONS ARE IN MILLIMETER & ELEVATION IN METER UNLESS SPECIFIED OTHERWISE.
2. ALL DIMENSIONS MEASURE UNFINISHED SURFACES UNLESS SPECIFIED OTHERWISE.
3. DIMENSIONS ARE TO BE READ AND NOT SCALED OFF.
4. ANY DISCREPANCIES IN THE DRAWING ARE TO BE BROUGHT TO THE IMMEDIATE NOTICE OF THE SUPERVISION TEAM.

CHECKED	APPROVED	DATE	DRAWING NO.
			AR_11
		MARCH, 2026	SCALE
			NTS

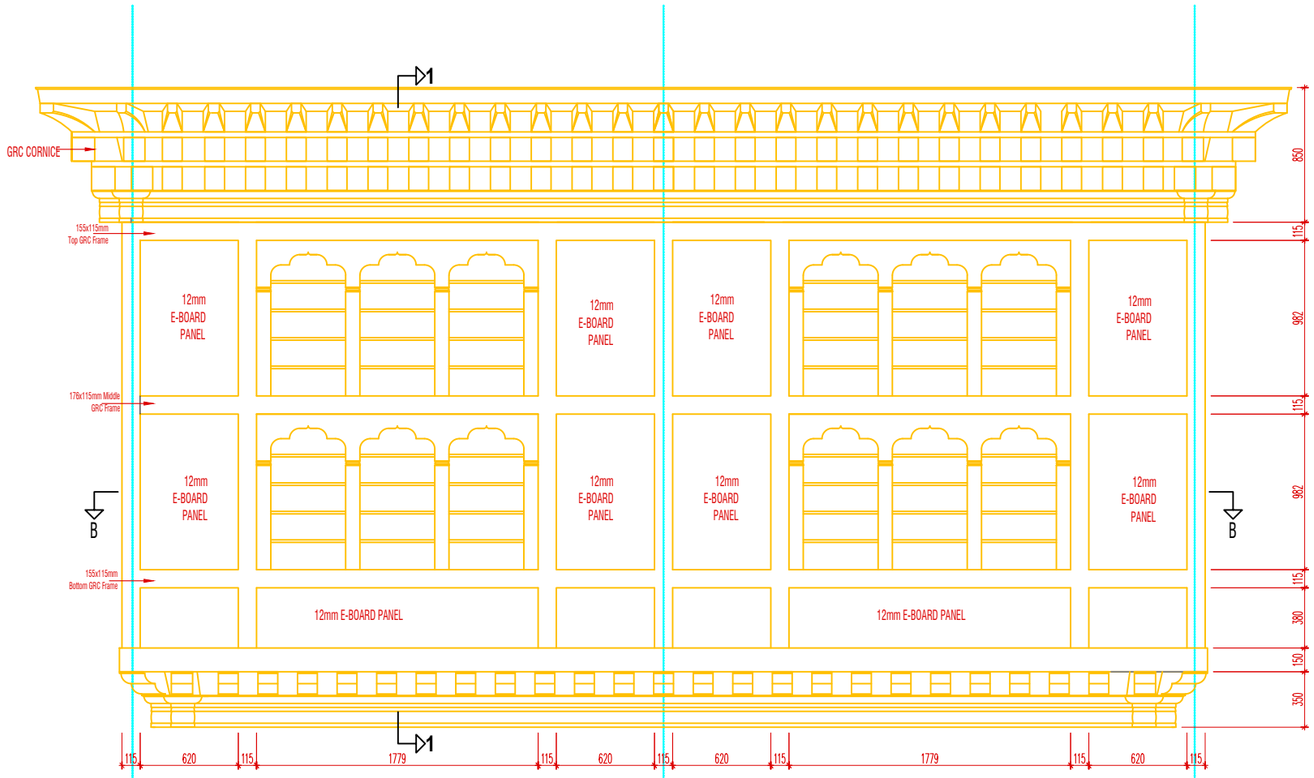

Rabsey Elevation

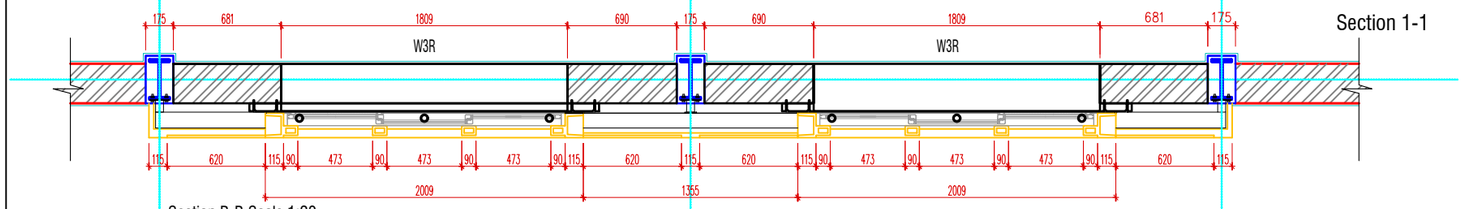

Section B-B Scale 1:20

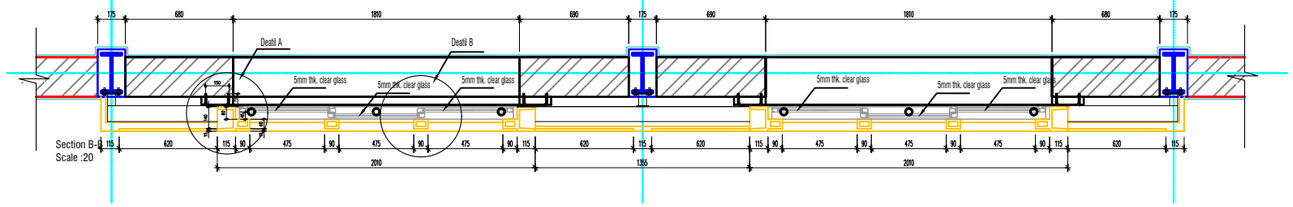

Section B-B Scale :20

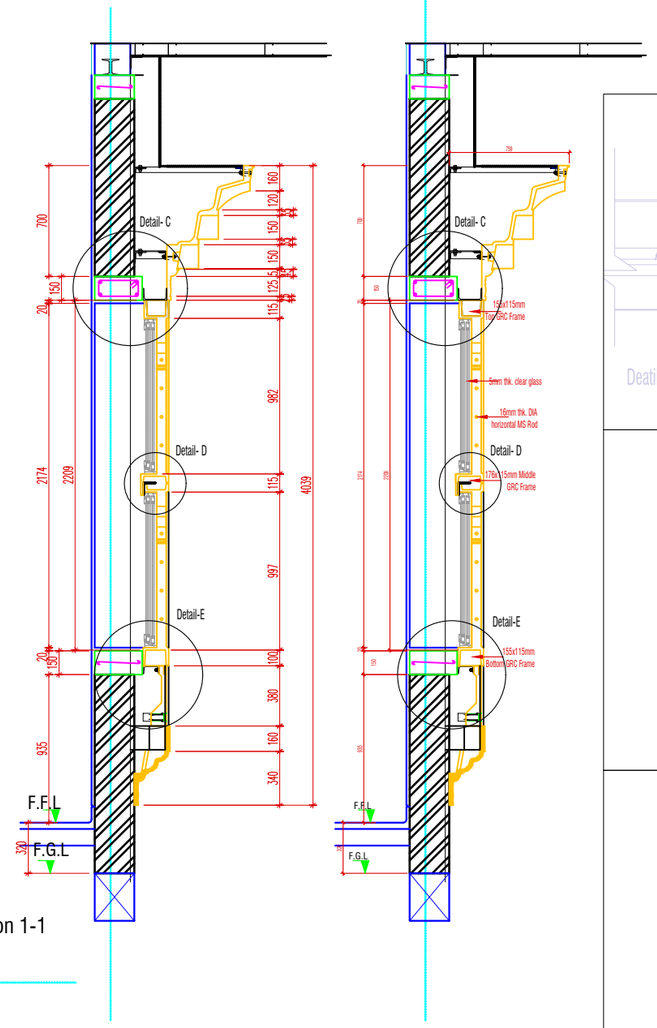

Section 1-1

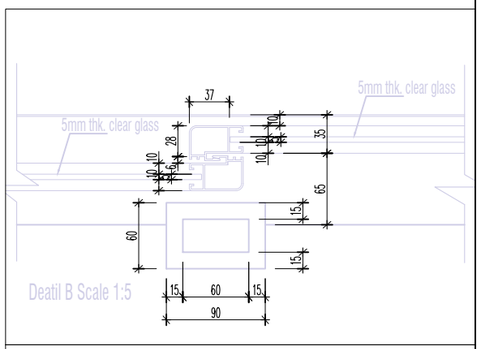

Deatil B Scale 1:5

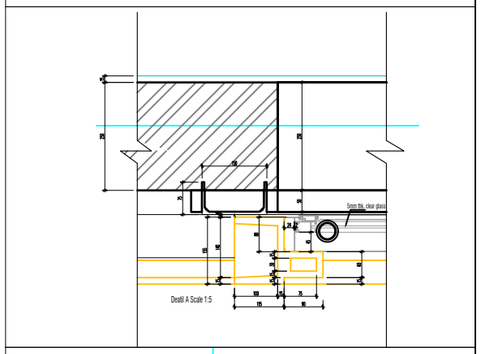

Deatil A Scale 1:5

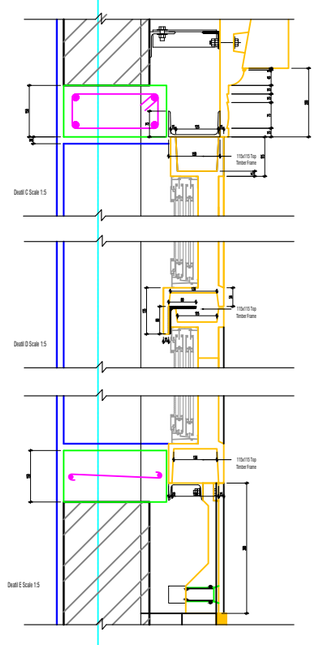

Khorlochhu

ARCHITECTURAL DRAWING

PROJECT TITLE	DRAWING TITLE
Construction of Doksum Primary School	RABSEY_DETAILS

NOTES

1. ALL DIMENSIONS ARE IN MILLIMETER & ELEVATION IN METER UNLESS SPECIFIED OTHERWISE.
2. ALL DIMENSIONS MEASURE UNFINISHED SURFACES UNLESS SPECIFIED OTHERWISE.
3. DIMENSIONS ARE TO BE READ AND NOT SCALED OFF.
4. ANY DISCREPANCIES IN THE DRAWING ARE TO BE BROUGHT TO THE IMMEDIATE NOTICE OF THE SUPERVISION TEAM.

CHECKED	APPROVED	DATE	DRAWING NO.
			AR_12
		MARCH, 2026	SCALE
			NTS

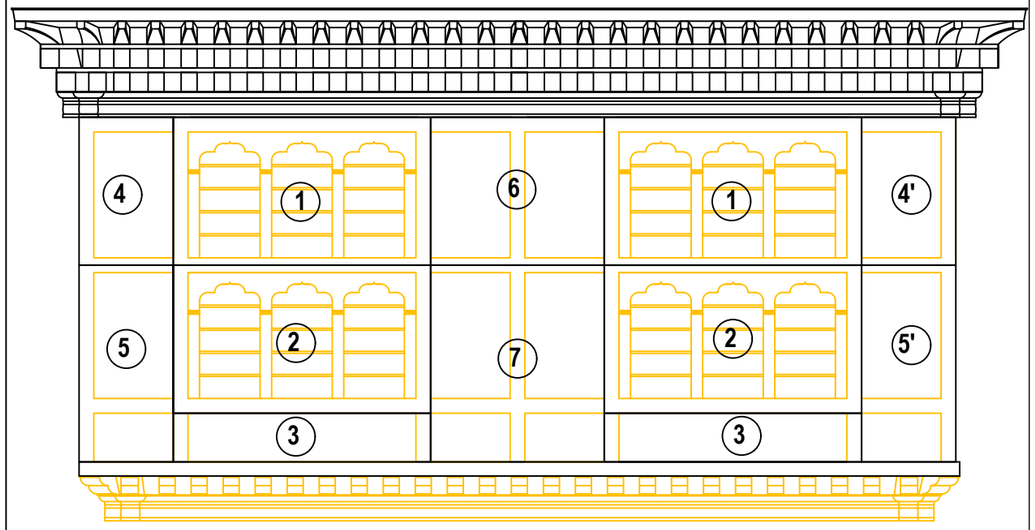

Parts No,1

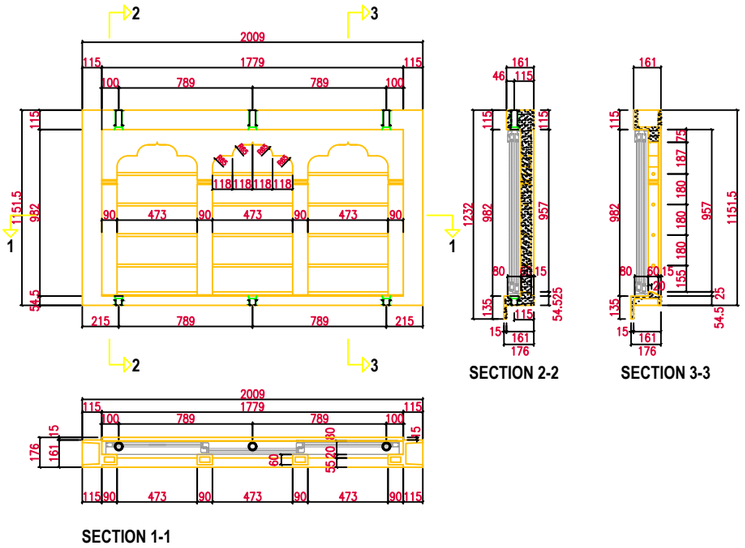

Parts No,2

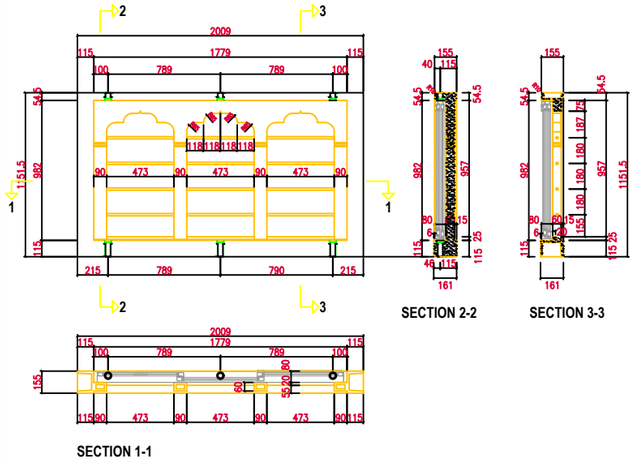

Parts No,3

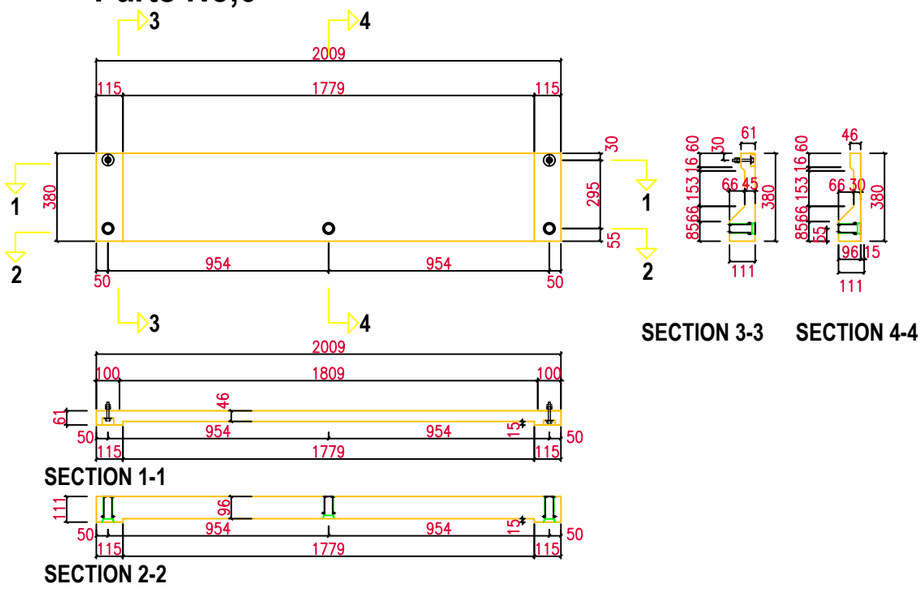

Parts No,4

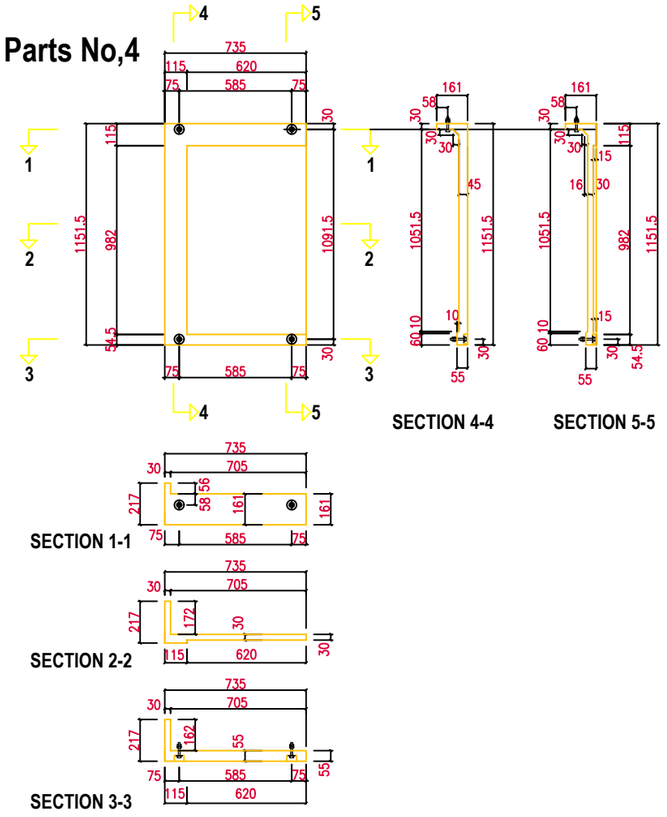

Parts No,5

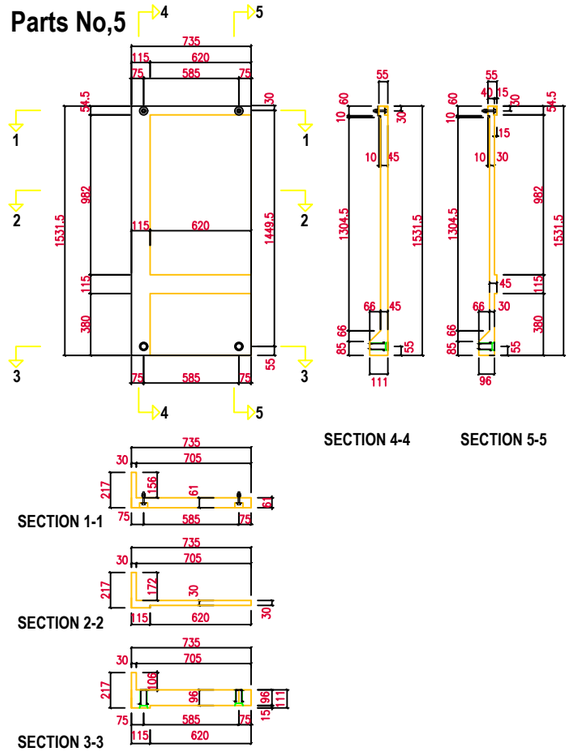

Khorlochhu

ARCHITECTURAL DRAWING

PROJECT TITLE	DRAWING TITLE
Construction of Doksum Primary School	RABSEY_DETAILS

NOTES

1. ALL DIMENSIONS ARE IN MILLIMETER & ELEVATION IN METER UNLESS SPECIFIED OTHERWISE.
2. ALL DIMENSIONS MEASURE UNFINISHED SURFACES UNLESS SPECIFIED OTHERWISE.
3. DIMENSIONS ARE TO BE READ AND NOT SCALED OFF.
4. ANY DISCREPANCIES IN THE DRAWING ARE TO BE BROUGHT TO THE IMMEDIATE NOTICE OF THE SUPERVISION TEAM.

CHECKED	APPROVED	DATE	DRAWING NO.
			AR_13
		MARCH, 2026	SCALE
			NTS

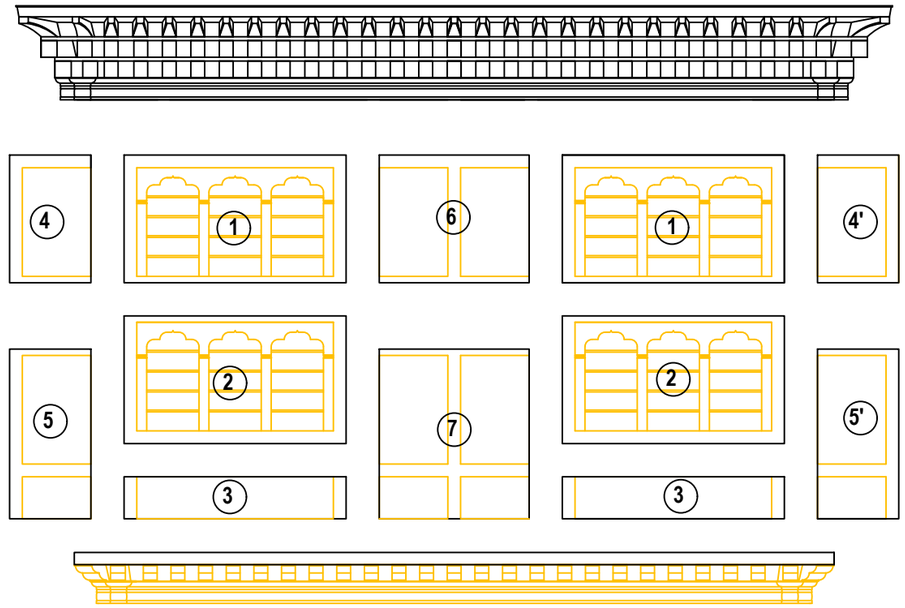

Parts No,4'

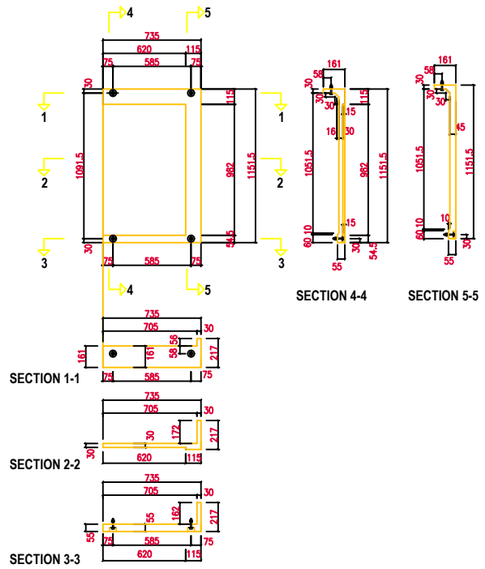

Parts No,5'

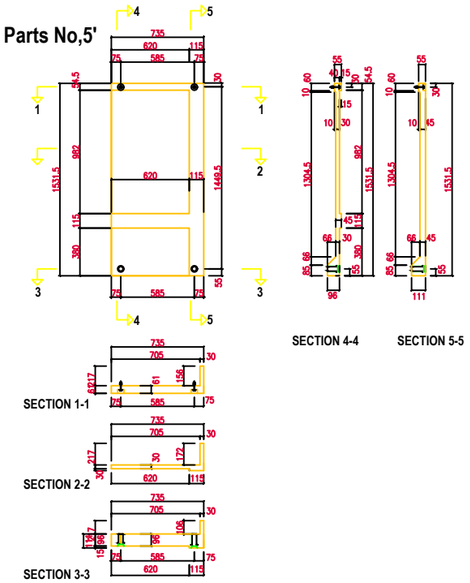

Parts No,6

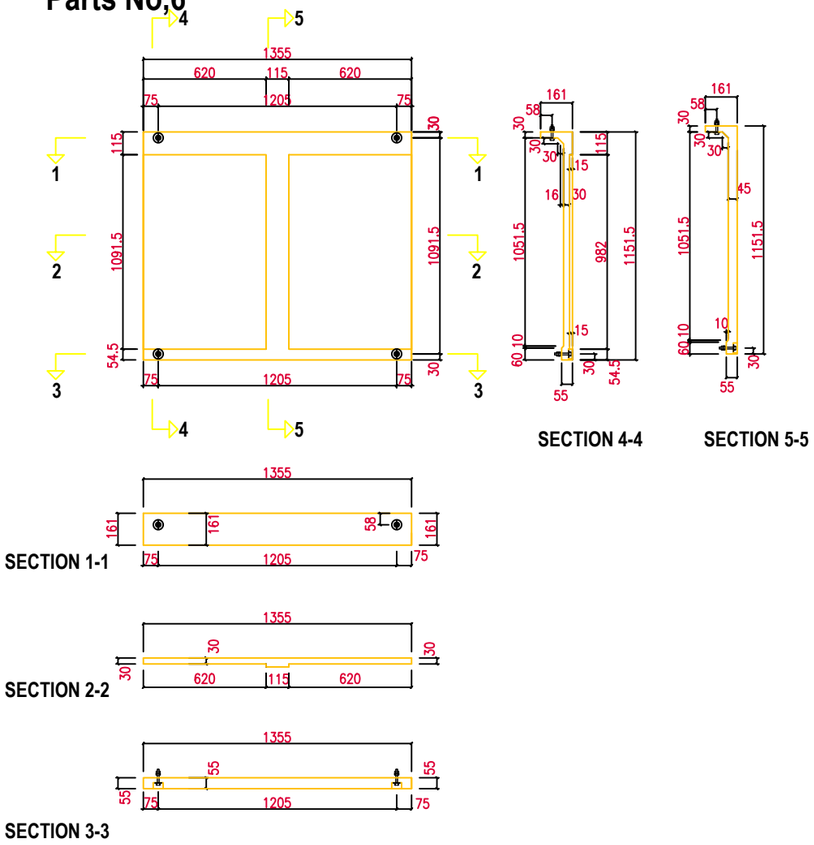

Parts No,7

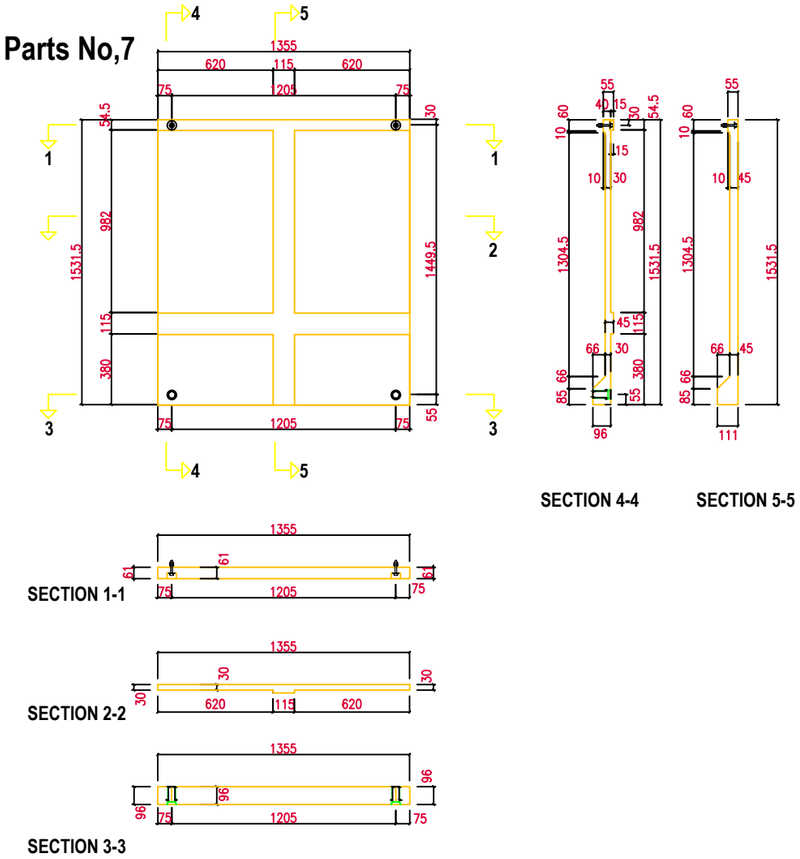

Khorlochhu

ARCHITECTURAL DRAWING

PROJECT TITLE	DRAWING TITLE
Construction of Doksum Primary School	RABSEY_DETAILS

NOTES

1. ALL DIMENSIONS ARE IN MILLIMETER & ELEVATION IN METER UNLESS SPECIFIED OTHERWISE.
2. ALL DIMENSIONS MEASURE UNFINISHED SURFACES UNLESS SPECIFIED OTHERWISE.
3. DIMENSIONS ARE TO BE READ AND NOT SCALED OFF.
4. ANY DISCREPANCIES IN THE DRAWING ARE TO BE BROUGHT TO THE IMMEDIATE NOTICE OF THE SUPERVISION TEAM.

CHECKED	APPROVED	DATE	DRAWING NO.
			AR_14
		MARCH, 2026	SCALE
			NTS

W1

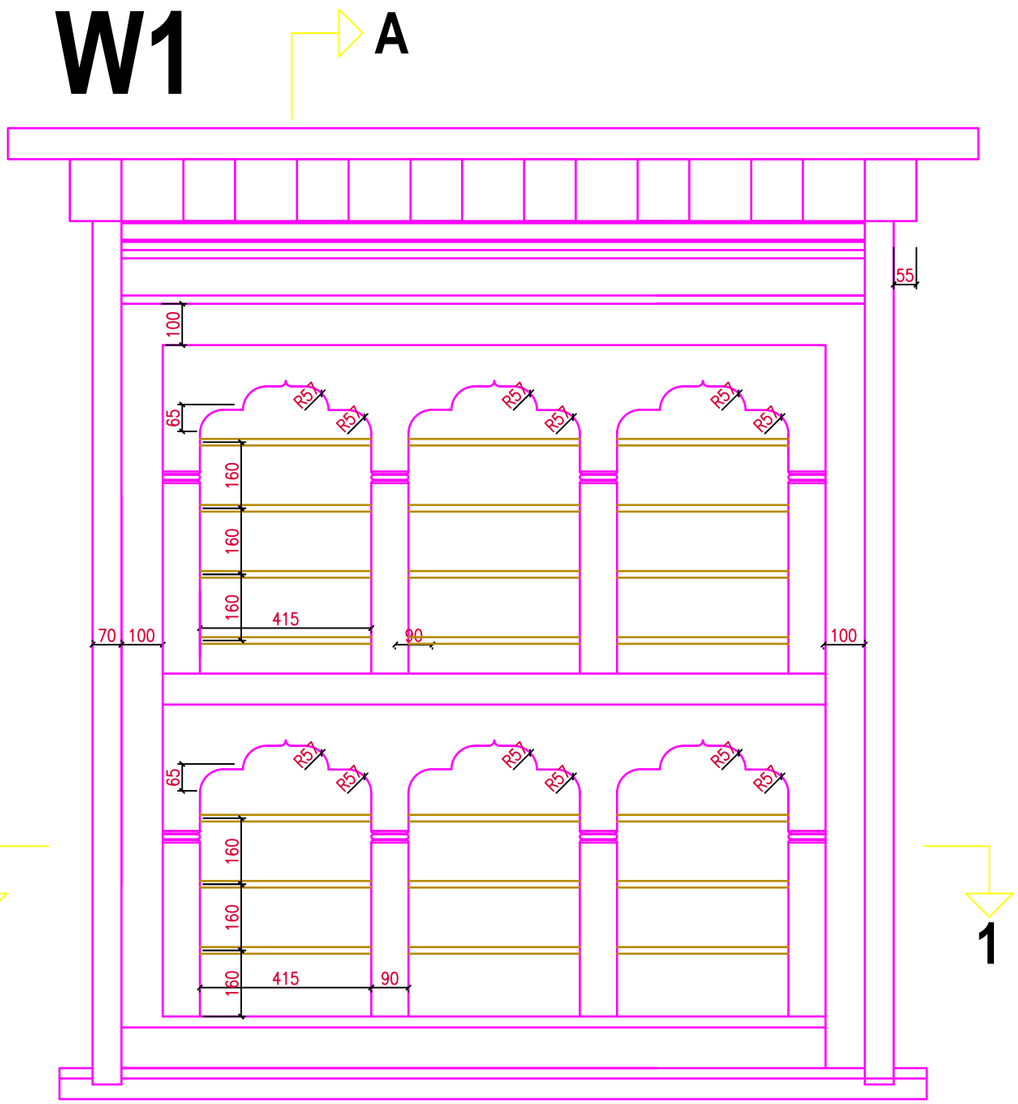

ELEVATION

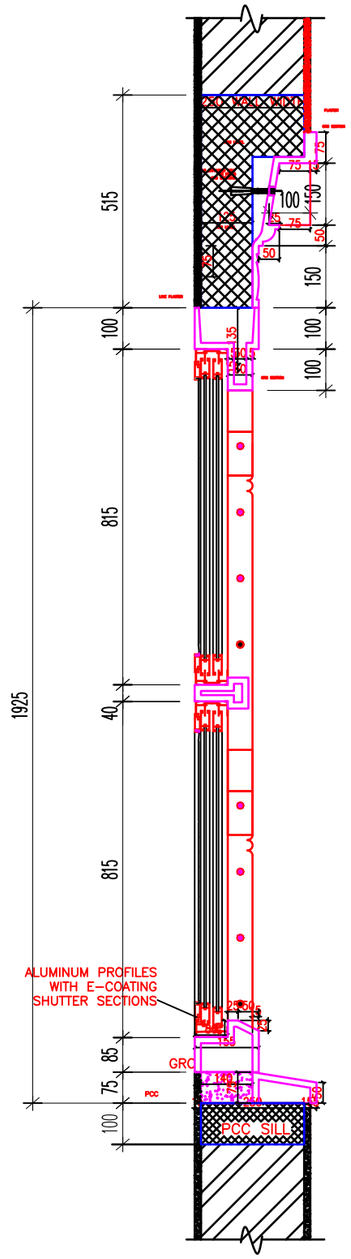

SECTION AT A-A

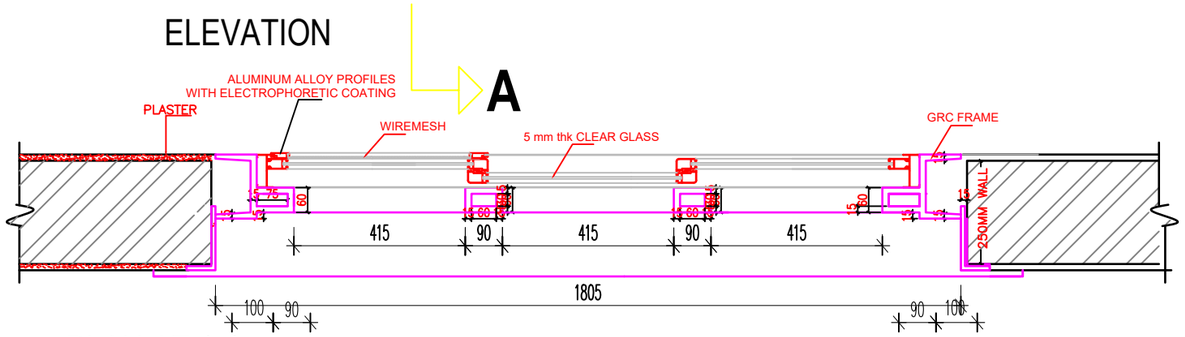

PLAN AT 1-1

Khorlochhu

ARCHITECTURAL DRAWING

PROJECT TITLE	DRAWING TITLE
Construction of Doksum Primary School	WINDOW_DETAILS

NOTES

1. ALL DIMENSIONS ARE IN MILLIMETER & ELEVATION IN METER UNLESS SPECIFIED OTHERWISE.
2. ALL DIMENSIONS MEASURE UNFINISHED SURFACES UNLESS SPECIFIED OTHERWISE.
3. DIMENSIONS ARE TO BE READ AND NOT SCALED OFF.
4. ANY DISCREPANCIES IN THE DRAWING ARE TO BE BROUGHT TO THE IMMEDIATE NOTICE OF THE SUPERVISION TEAM.

CHECKED	APPROVED	DATE	DRAWING NO.
			AR_15
		MARCH, 2026	SCALE
			NTS

W2

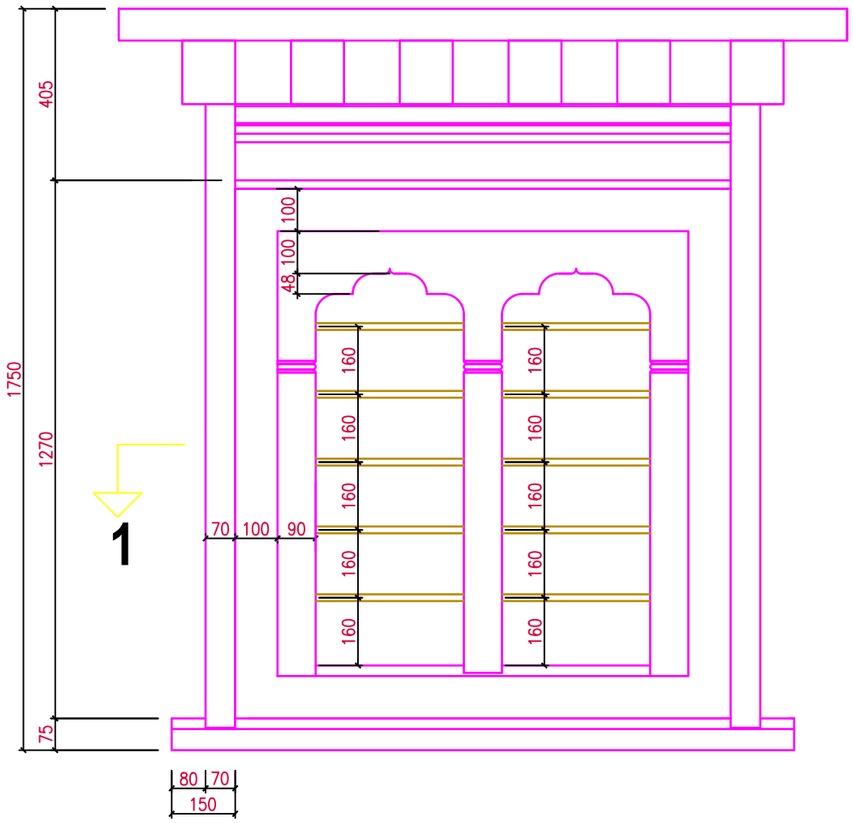

ELEVATION

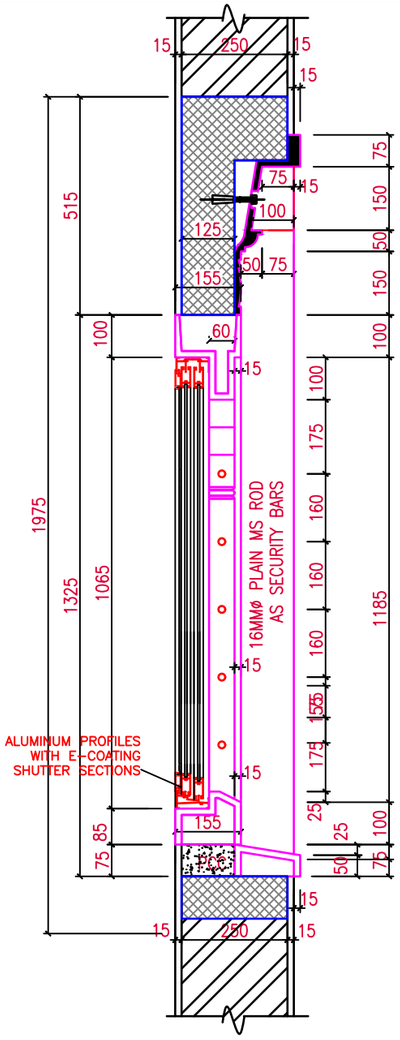

SECTION AT 2-2

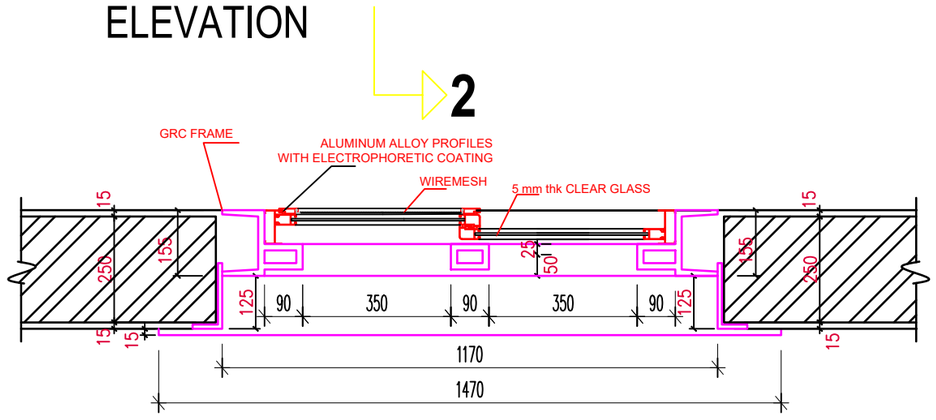

PLAN AT 1-1

Khorlochhu

ARCHITECTURAL DRAWING		NOTES	CHECKED	APPROVED	DATE	DRAWING NO.
PROJECT TITLE	DRAWING TITLE	1. ALL DIMENSIONS ARE IN MILLIMETER & ELEVATION IN METER UNLESS SPECIFIED OTHERWISE. 2. ALL DIMENSIONS MEASURE UNFINISHED SURFACES UNLESS SPECIFIED OTHERWISE. 3. DIMENSIONS ARE TO BE READ AND NOT SCALED OFF. 4. ANY DISCREPANCIES IN THE DRAWING ARE TO BE BROUGHT TO THE IMMEDIATE NOTICE OF THE SUPERVISION TEAM.				AR_16
Construction of Doksum Primary School	WINDOW_DETAILS				MARCH, 2026	SCALE NTS

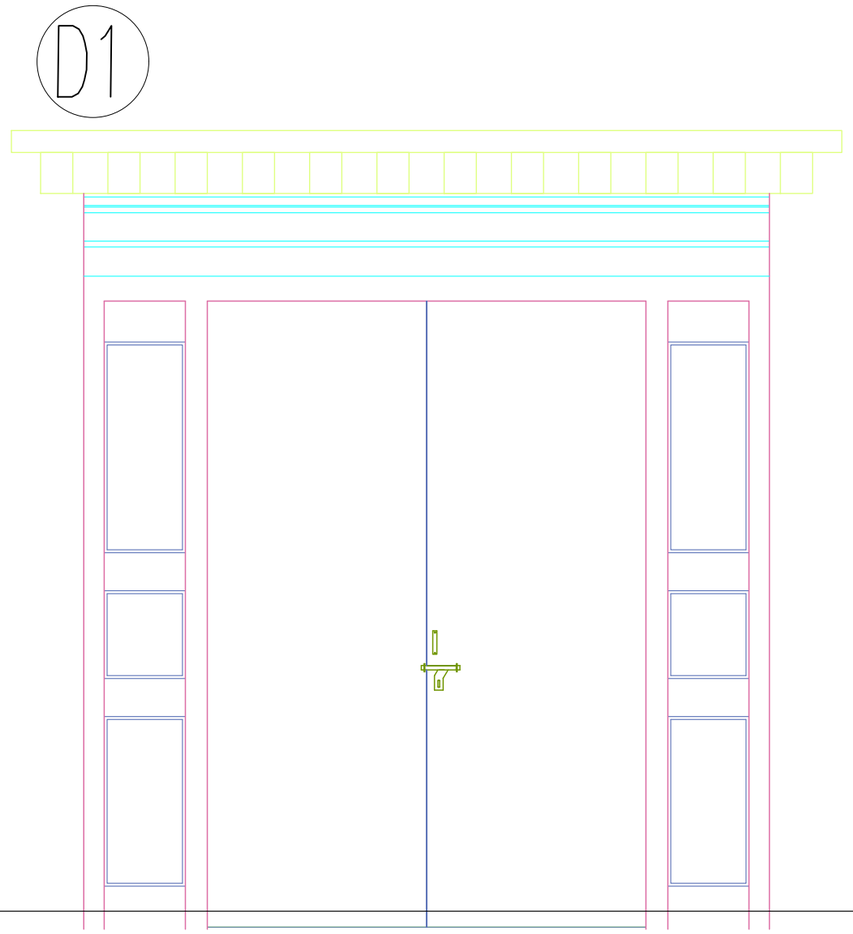

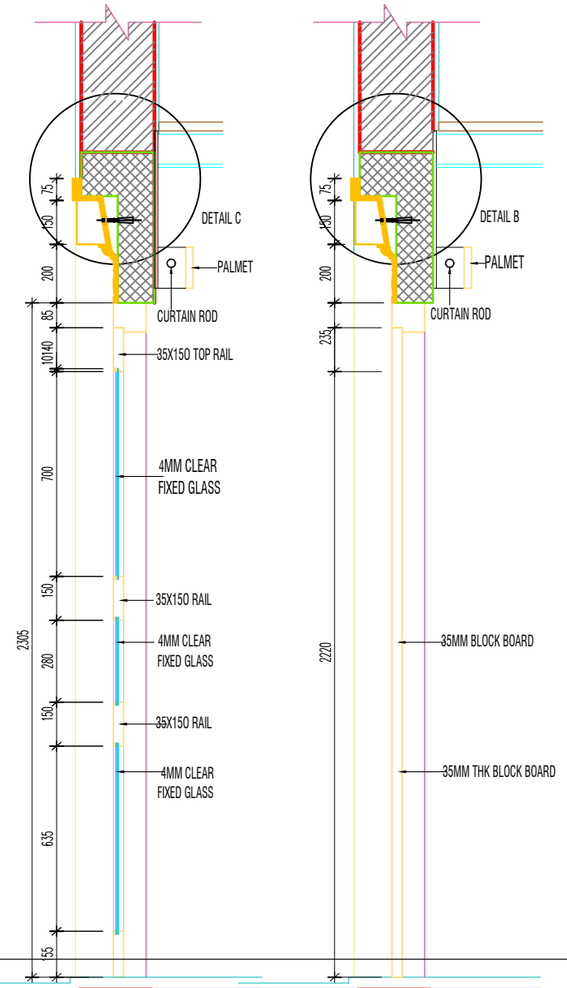

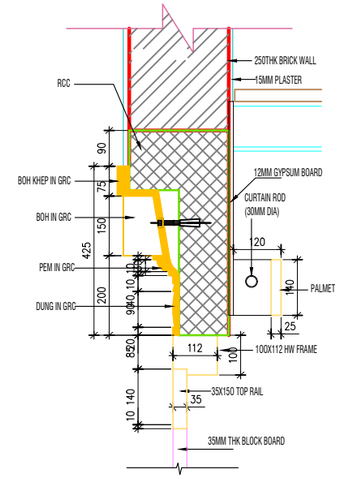

DETAIL B
Scale 1:10

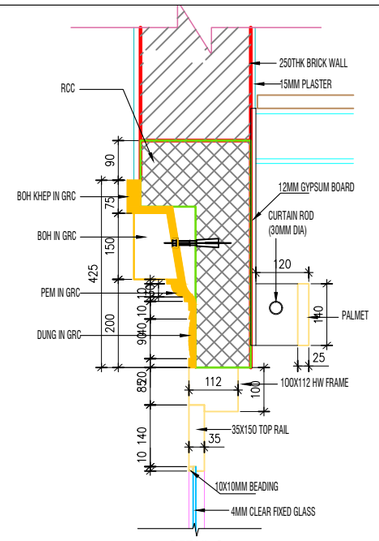

DETAIL C
Scale 1:10

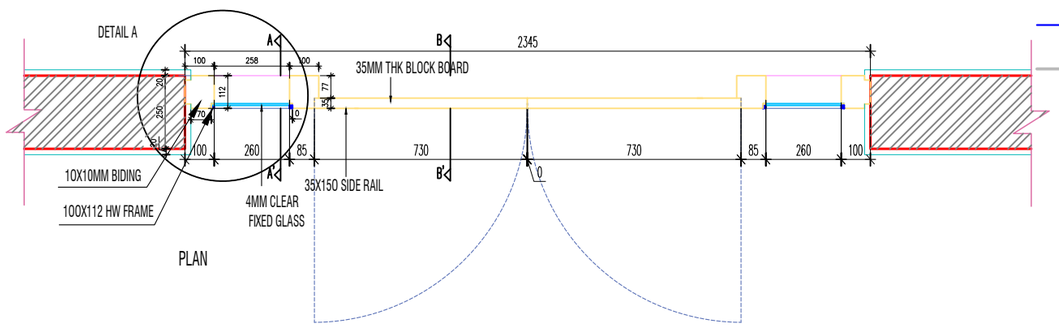

PLAN

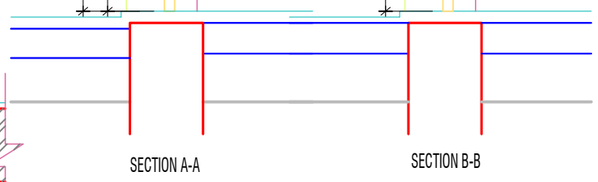

SECTION A-A

SECTION B-B

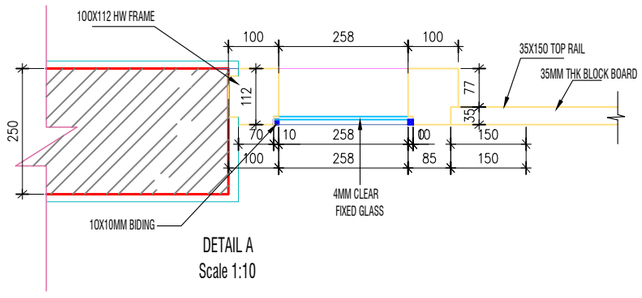

DETAIL A
Scale 1:10

Khorlochhu

ARCHITECTURAL DRAWING

PROJECT TITLE	DRAWING TITLE
Construction of Doksum Primary School	DOOR_DETAILS

NOTES

1. ALL DIMENSIONS ARE IN MILLIMETER & ELEVATION IN METER UNLESS SPECIFIED OTHERWISE.
2. ALL DIMENSIONS MEASURE UNFINISHED SURFACES UNLESS SPECIFIED OTHERWISE.
3. DIMENSIONS ARE TO BE READ AND NOT SCALED OFF.
4. ANY DISCREPANCIES IN THE DRAWING ARE TO BE BROUGHT TO THE IMMEDIATE NOTICE OF THE SUPERVISION TEAM.

CHECKED	APPROVED	DATE	DRAWING NO.
			AR_17
		MARCH, 2026	SCALE
			NTS

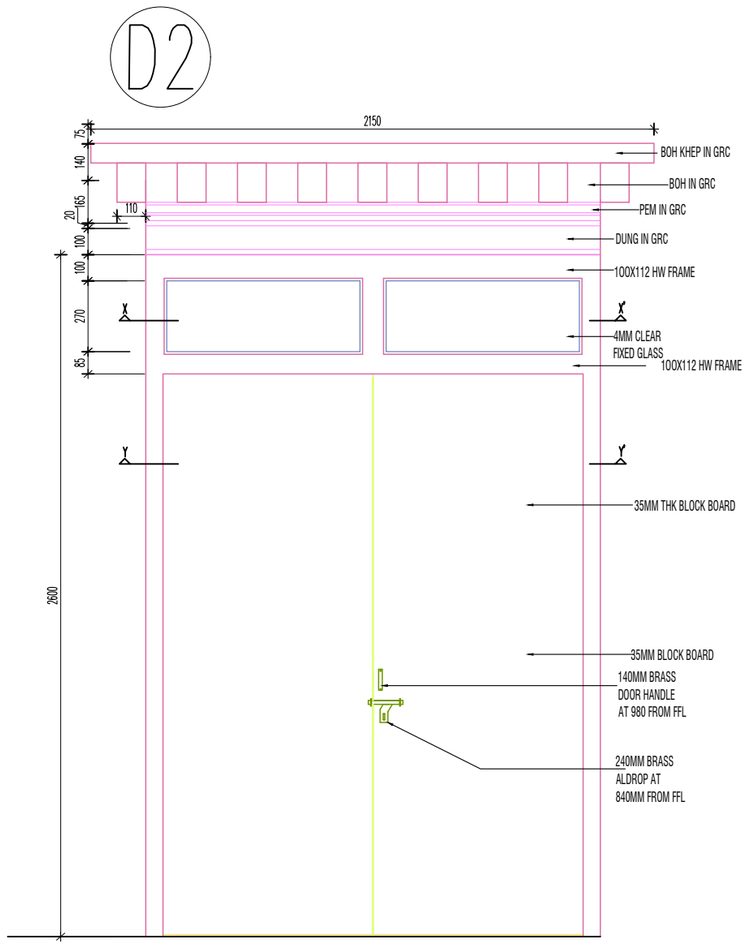

ELEVATION

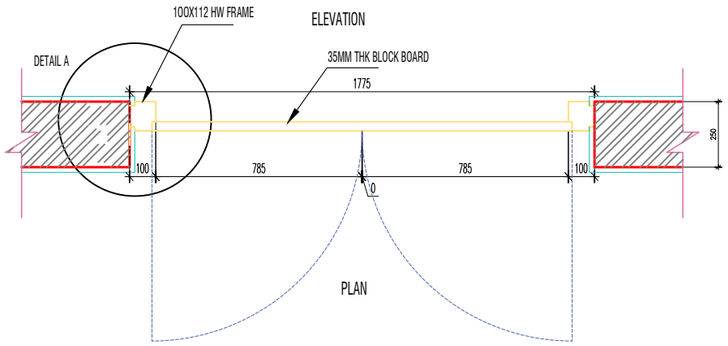

PLAN

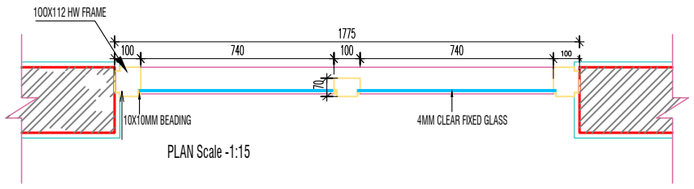

PLAN Scale -1:15

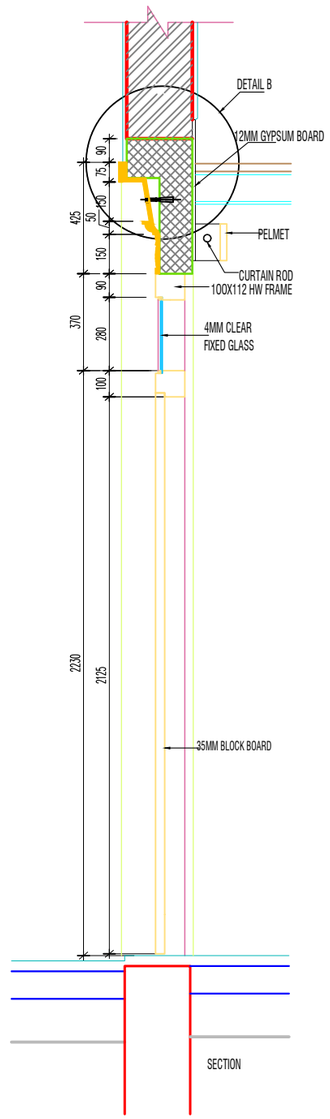

SECTION

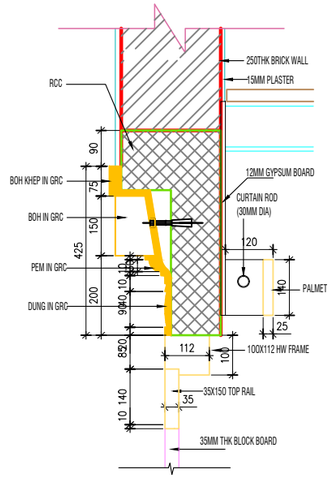

DETAIL B
Scale 1:10

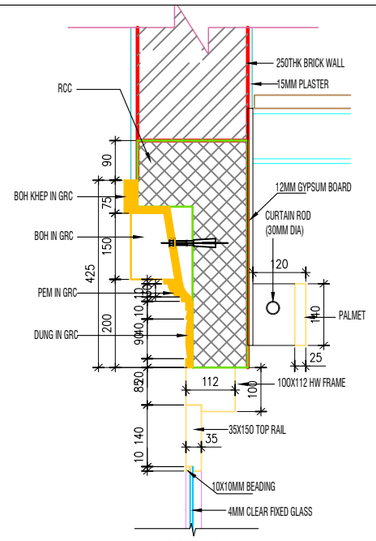

DETAIL C
Scale 1:10

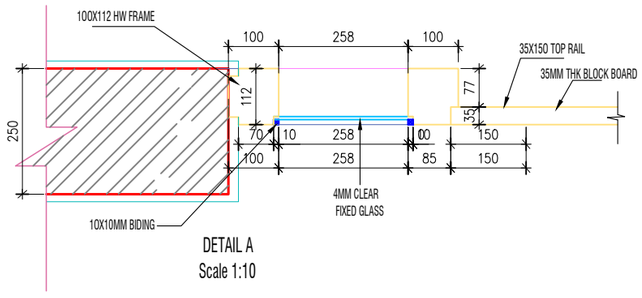

DETAIL A
Scale 1:10

Khorlochhu

ARCHITECTURAL DRAWING

PROJECT TITLE	DRAWING TITLE
Construction of Doksum Primary School	DOOR_DETAILS

NOTES

1. ALL DIMENSIONS ARE IN MILLIMETER & ELEVATION IN METER UNLESS SPECIFIED OTHERWISE.
2. ALL DIMENSIONS MEASURE UNFINISHED SURFACES UNLESS SPECIFIED OTHERWISE.
3. DIMENSIONS ARE TO BE READ AND NOT SCALED OFF.
4. ANY DISCREPANCIES IN THE DRAWING ARE TO BE BROUGHT TO THE IMMEDIATE NOTICE OF THE SUPERVISION TEAM.

CHECKED	APPROVED	DATE	DRAWING NO.
			AR_18
		MARCH, 2026	SCALE
			NTS

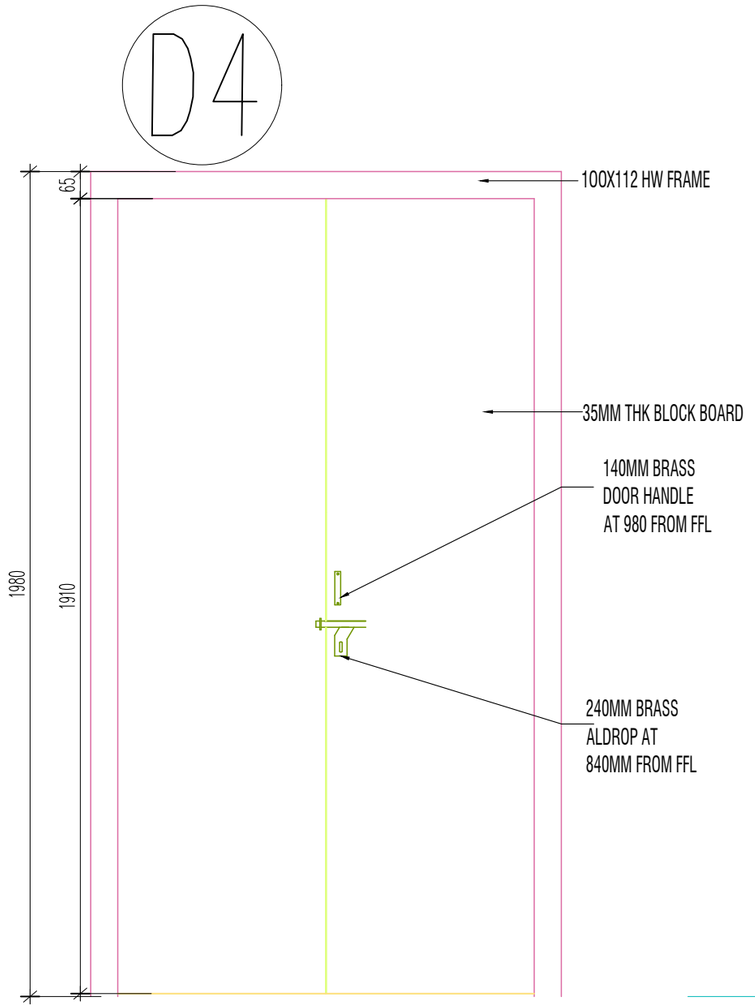

ELEVATION

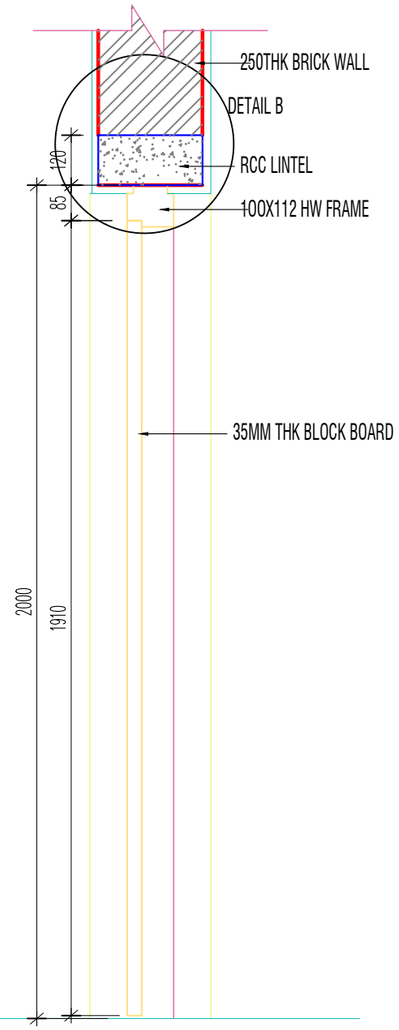

SECTION

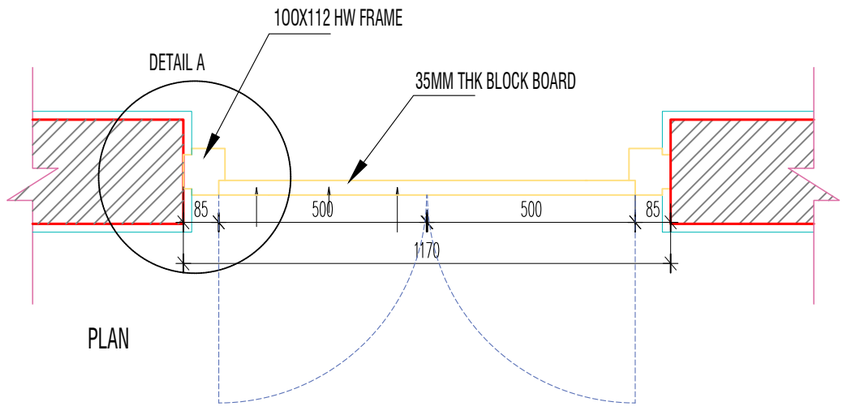

PLAN

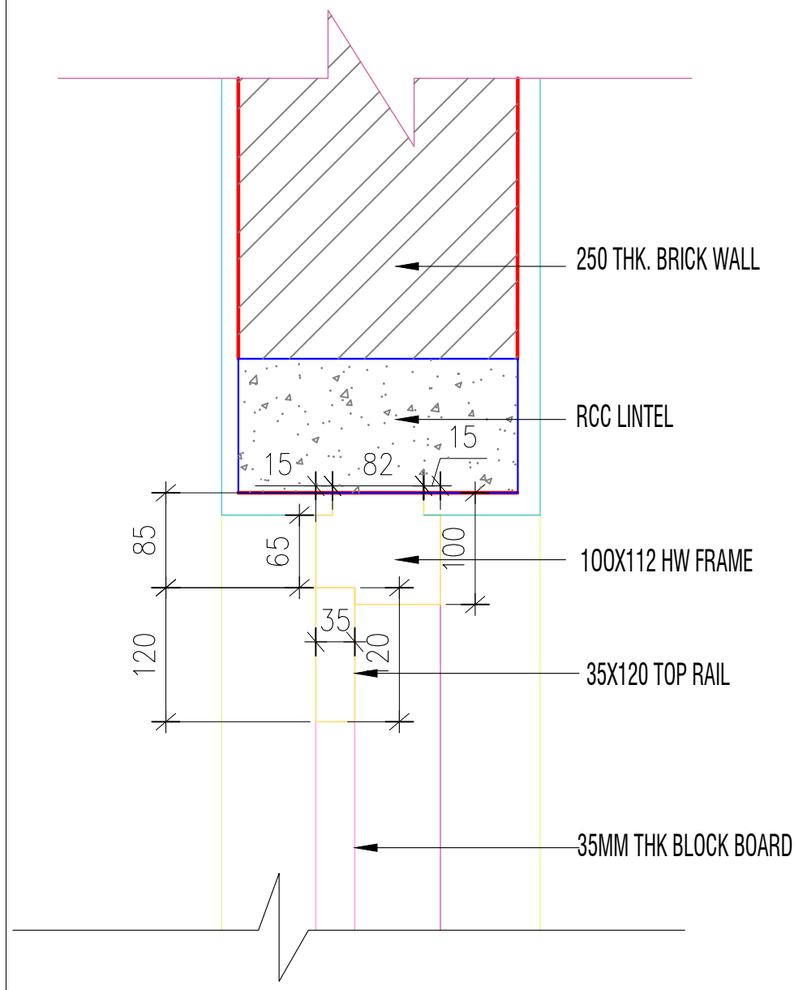

DETAIL B, Scale-1:10

Khorlochhu

ARCHITECTURAL DRAWING

PROJECT TITLE	DRAWING TITLE
Construction of Doksum Primary School	DOOR_DETAILS

NOTES

1. ALL DIMENSIONS ARE IN MILLIMETER & ELEVATION IN METER UNLESS SPECIFIED OTHERWISE.
2. ALL DIMENSIONS MEASURE UNFINISHED SURFACES UNLESS SPECIFIED OTHERWISE.
3. DIMENSIONS ARE TO BE READ AND NOT SCALED OFF.
4. ANY DISCREPANCIES IN THE DRAWING ARE TO BE BROUGHT TO THE IMMEDIATE NOTICE OF THE SUPERVISION TEAM.

CHECKED	APPROVED	DATE	DRAWING NO.
			AR_19
		MARCH, 2026	SCALE
			NTS

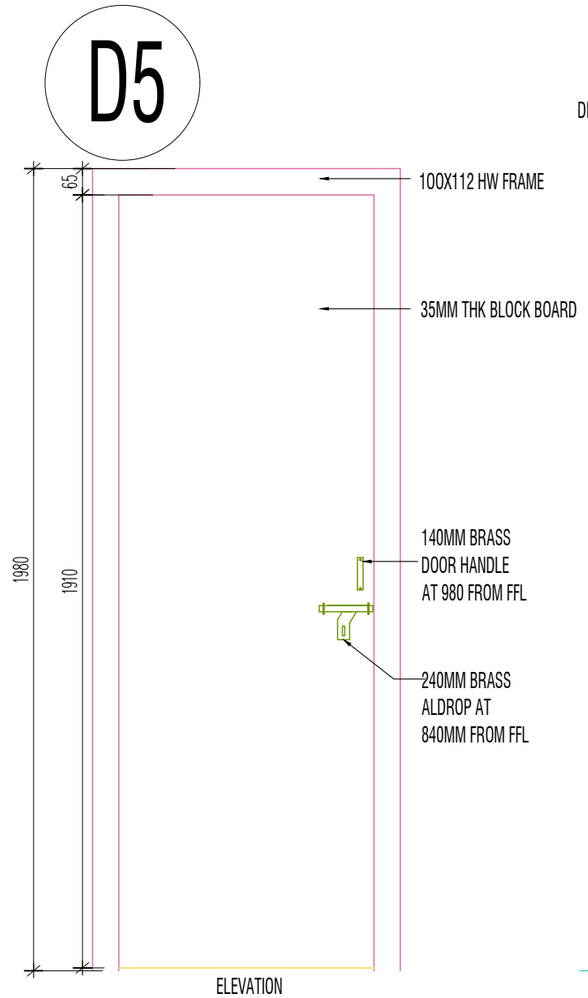

ELEVATION

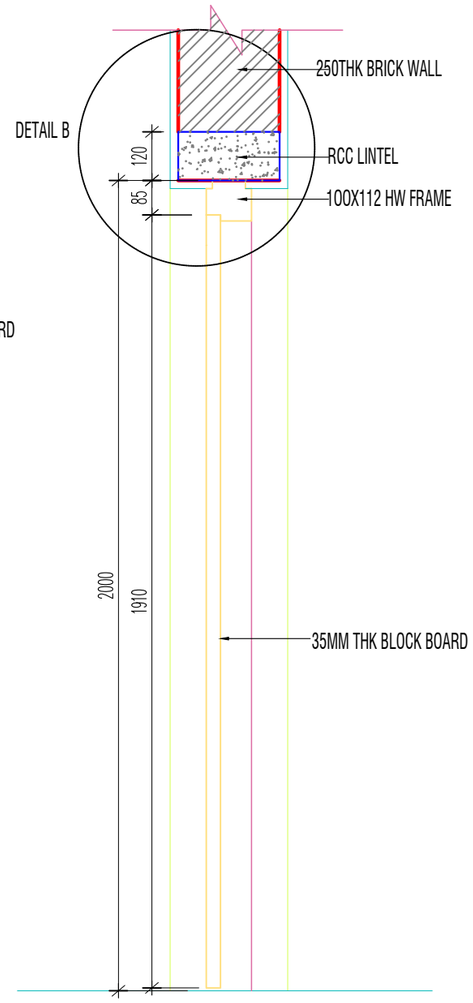

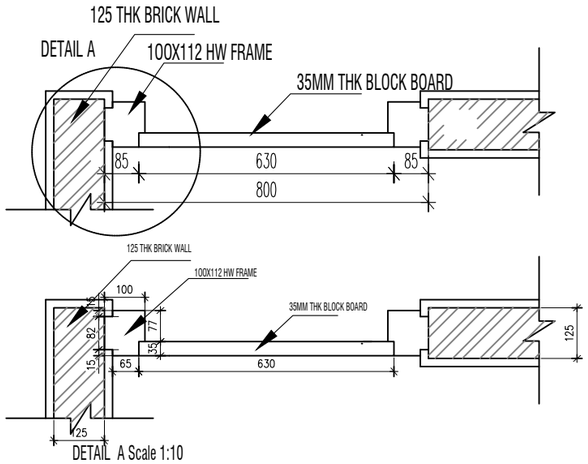

DETAIL A Scale 1:10

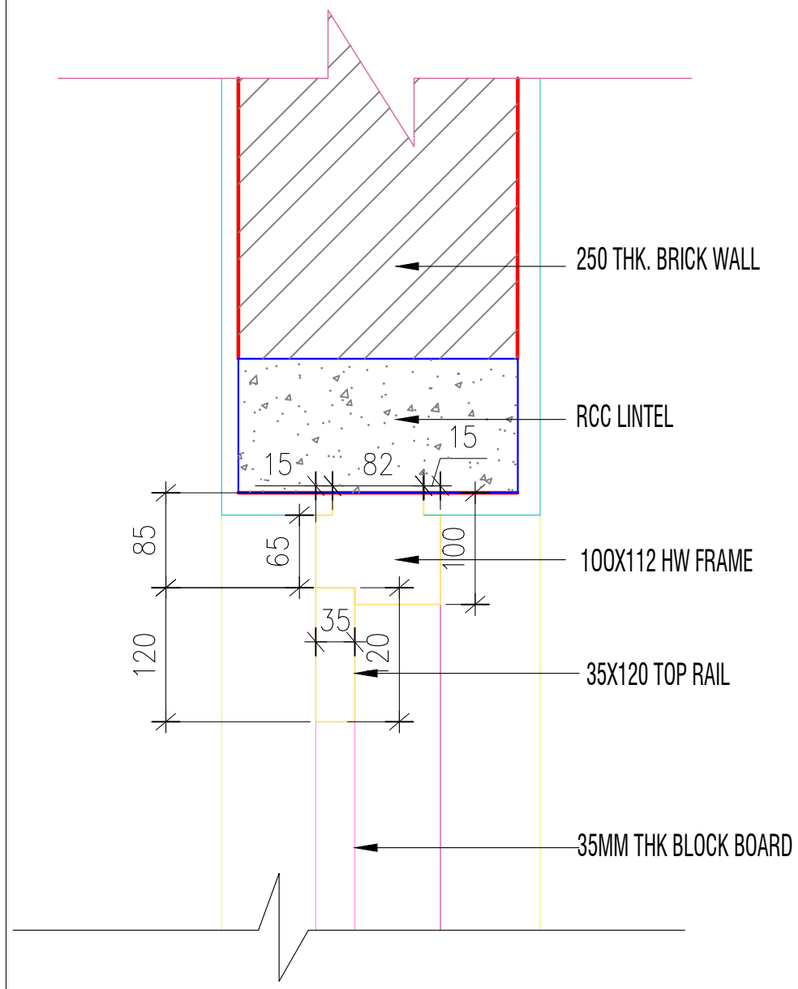

DETAIL B, Scale-1:10

Khorlochhu

ARCHITECTURAL DRAWING

PROJECT TITLE	DRAWING TITLE
Construction of Doksum Primary School	DOOR_DETAILS

NOTES

1. ALL DIMENSIONS ARE IN MILLIMETER & ELEVATION IN METER UNLESS SPECIFIED OTHERWISE.
2. ALL DIMENSIONS MEASURE UNFINISHED SURFACES UNLESS SPECIFIED OTHERWISE.
3. DIMENSIONS ARE TO BE READ AND NOT SCALED OFF.
4. ANY DISCREPANCIES IN THE DRAWING ARE TO BE BROUGHT TO THE IMMEDIATE NOTICE OF THE SUPERVISION TEAM.

CHECKED	APPROVED	DATE	DRAWING NO.
			AR_20
		MARCH, 2026	SCALE
			NTS

D6

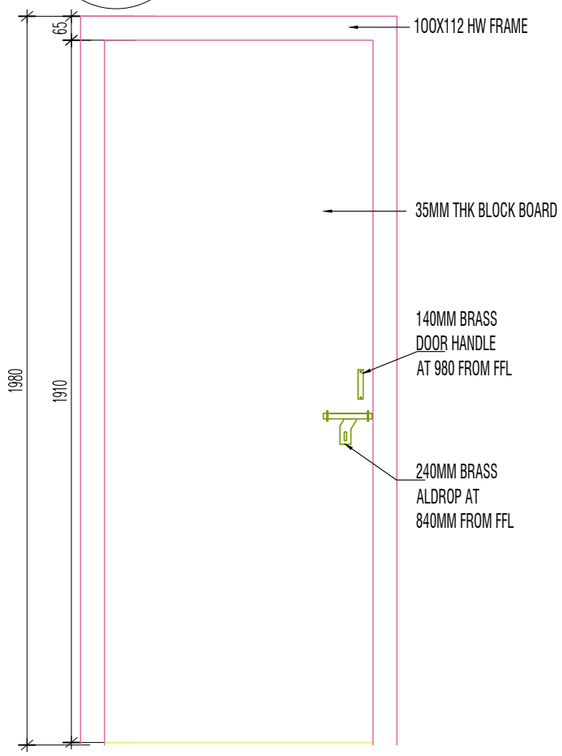

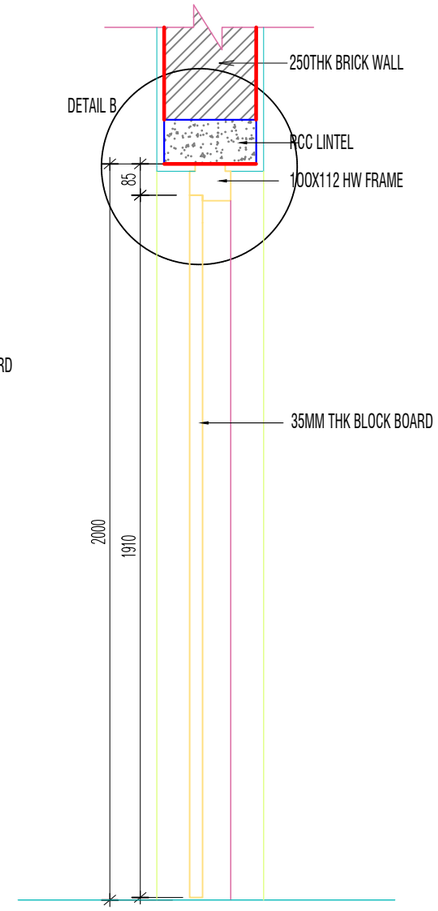

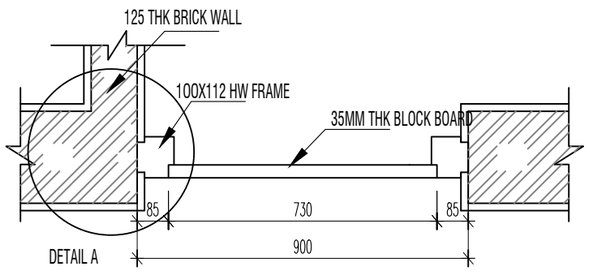

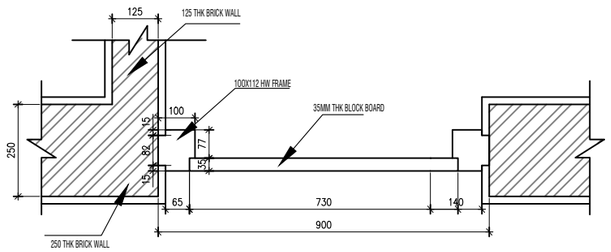

DETAIL A Scale 1:10

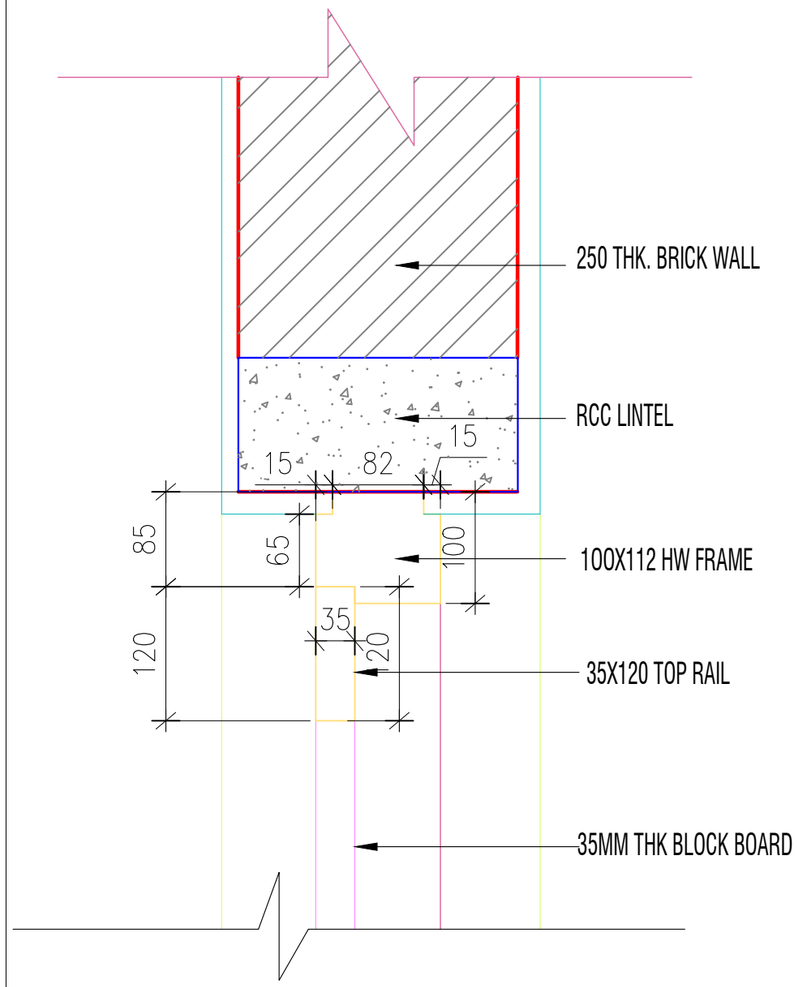

DETAIL B, Scale-1:10

Khorlochhu

ARCHITECTURAL DRAWING

PROJECT TITLE	DRAWING TITLE
Construction of Doksum Primary School	DOOR_DETAILS

NOTES

1. ALL DIMENSIONS ARE IN MILLIMETER & ELEVATION IN METER UNLESS SPECIFIED OTHERWISE.
2. ALL DIMENSIONS MEASURE UNFINISHED SURFACES UNLESS SPECIFIED OTHERWISE.
3. DIMENSIONS ARE TO BE READ AND NOT SCALED OFF.
4. ANY DISCREPANCIES IN THE DRAWING ARE TO BE BROUGHT TO THE IMMEDIATE NOTICE OF THE SUPERVISION TEAM.

CHECKED	APPROVED	DATE	DRAWING NO.
			AR_21
		MARCH, 2026	SCALE
			NTS

D-03

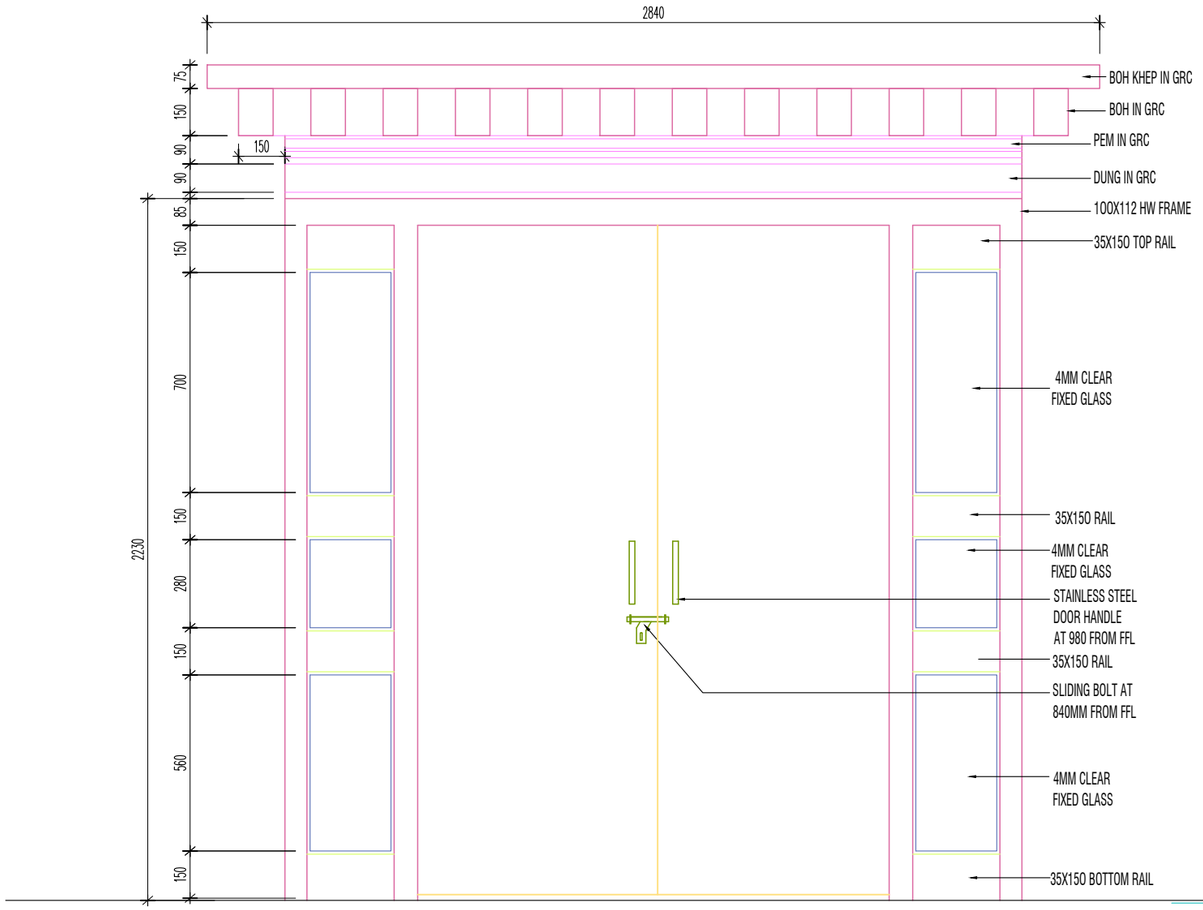

ELEVATION

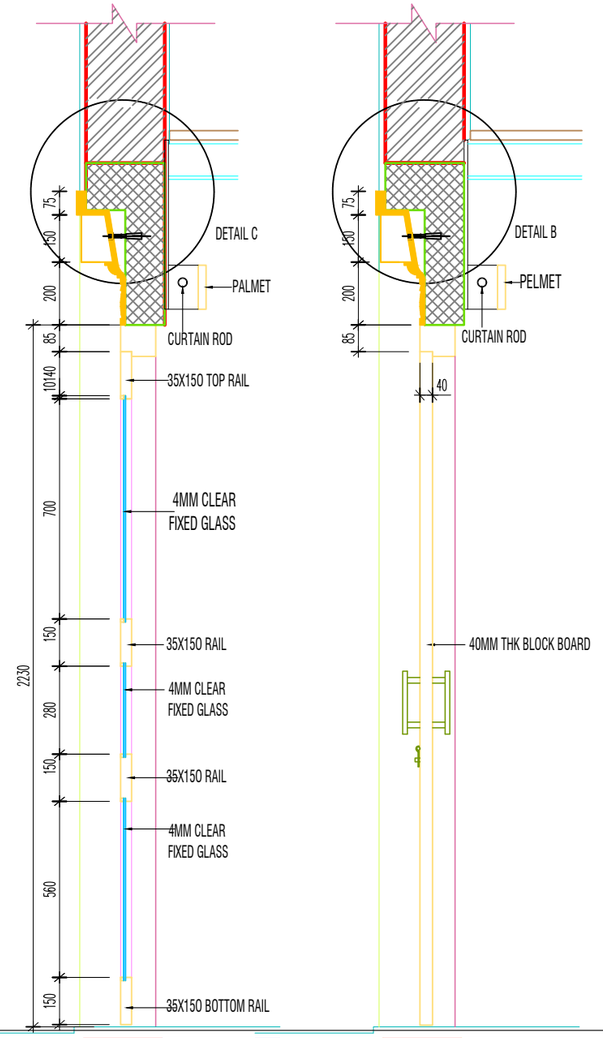

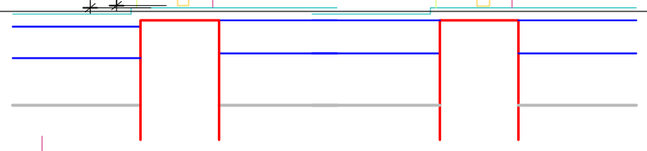

SECTION A-A

SECTION B-B

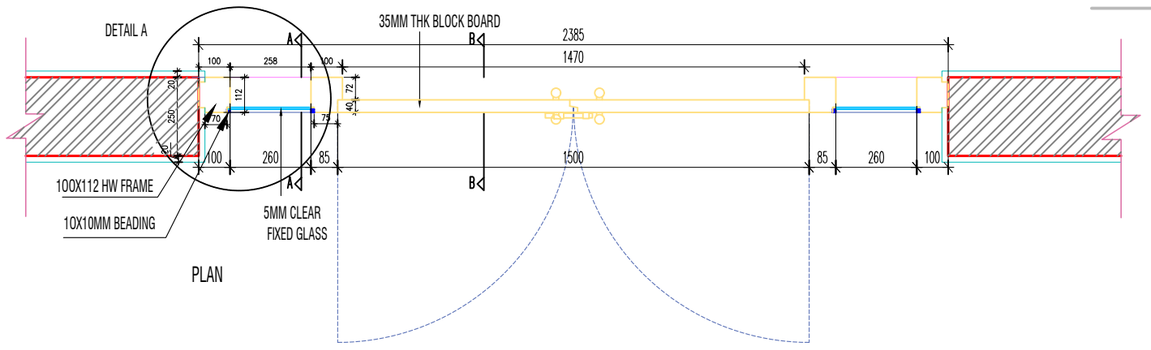

PLAN

Khorlochhu

ARCHITECTURAL DRAWING

PROJECT TITLE	DRAWING TITLE
Construction of Doksum Primary School	DOOR_DETAILS

NOTES

1. ALL DIMENSIONS ARE IN MILLIMETER & ELEVATION IN METER UNLESS SPECIFIED OTHERWISE.
2. ALL DIMENSIONS MEASURE UNFINISHED SURFACES UNLESS SPECIFIED OTHERWISE.
3. DIMENSIONS ARE TO BE READ AND NOT SCALED OFF.
4. ANY DISCREPANCIES IN THE DRAWING ARE TO BE BROUGHT TO THE IMMEDIATE NOTICE OF THE SUPERVISION TEAM.

CHECKED	APPROVED	DATE	DRAWING NO.
			AR_22
		MARCH, 2026	SCALE
			NTS

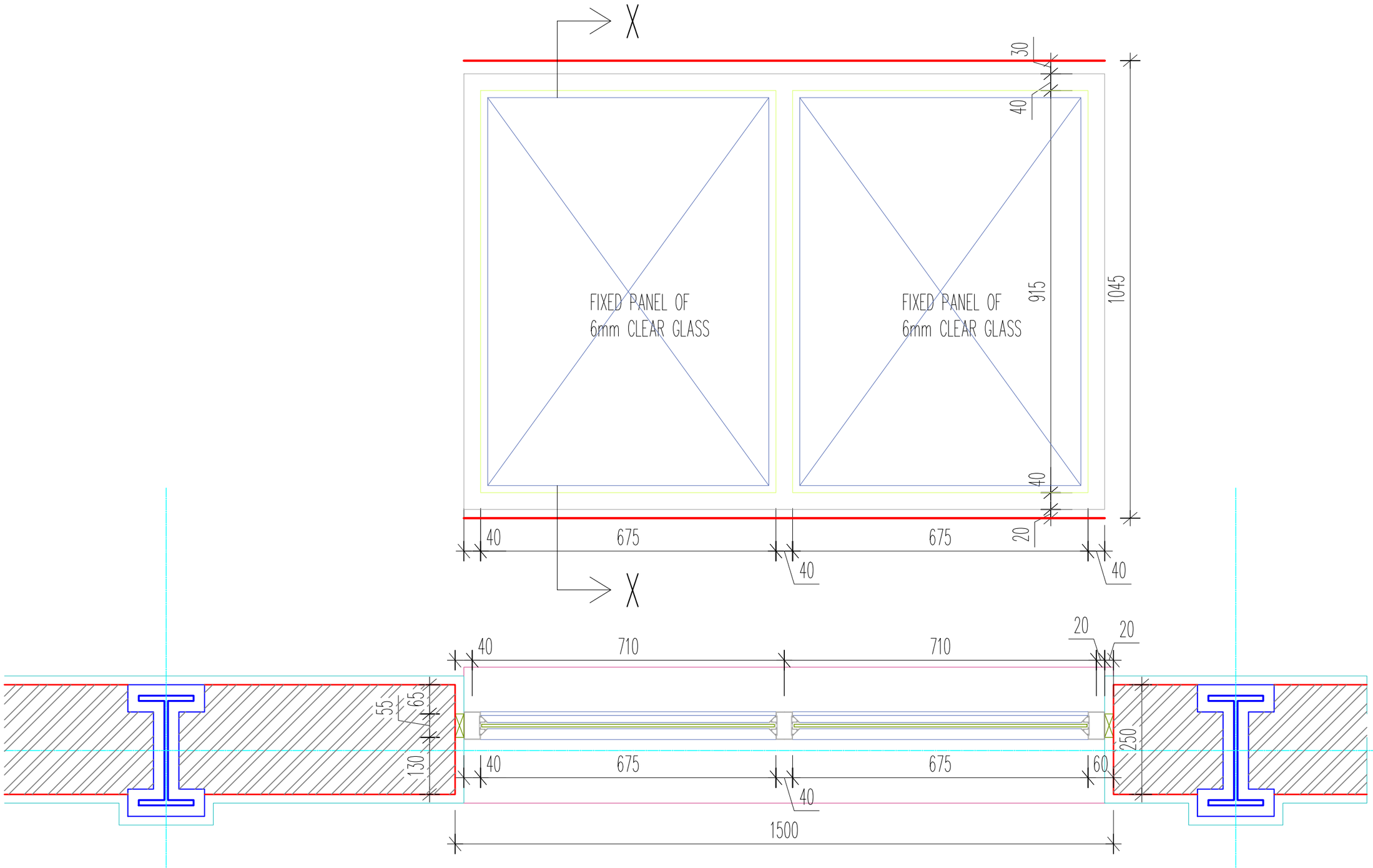

Khorlochhu	**ARCHITECTURAL DRAWING**	**NOTES**	**CHECKED**	**APPROVED**	**DATE**	**DRAWING NO.**
	PROJECT TITLE	**DRAWING TITLE**				**AR_23**
	Construction of Doksum Primary School	**VENTILATION_DETAILS**			MARCH, 2026	**SCALE**
						NTS

1. ALL DIMENSIONS ARE IN MILLIMETER & ELEVATION IN METER UNLESS SPECIFIED OTHERWISE.
2. ALL DIMENSIONS MEASURE UNFINISHED SURFACES UNLESS SPECIFIED OTHERWISE.
3. DIMENSIONS ARE TO BE READ AND NOT SCALED OFF.
4. ANY DISCREPANCIES IN THE DRAWING ARE TO BE BROUGHT TO THE IMMEDIATE NOTICE OF THE SUPERVISION TEAM.

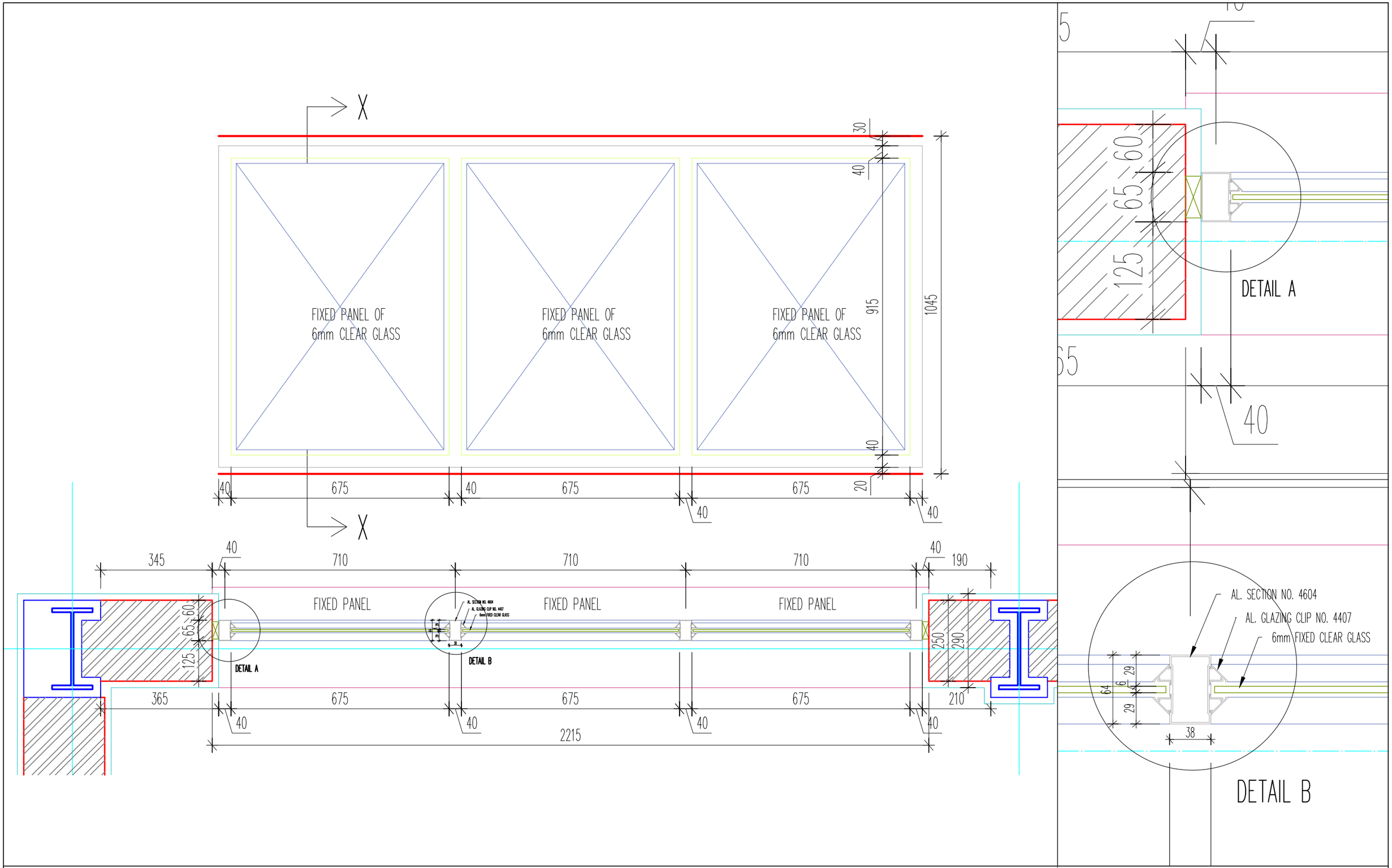

Khorlochhu	**ARCHITECTURAL DRAWING**	**NOTES**	**CHECKED**	**APPROVED**	**DATE**	**DRAWING NO.**
	PROJECT TITLE	**DRAWING TITLE**				**AR_24**
	Construction of Doksum Primary School	**VENTILATION_DETAILS**			MARCH, 2026	**SCALE**
						NTS

1. ALL DIMENSIONS ARE IN MILLIMETER & ELEVATION IN METER UNLESS SPECIFIED OTHERWISE.
2. ALL DIMENSIONS MEASURE UNFINISHED SURFACES UNLESS SPECIFIED OTHERWISE.
3. DIMENSIONS ARE TO BE READ AND NOT SCALED OFF.
4. ANY DISCREPANCIES IN THE DRAWING ARE TO BE BROUGHT TO THE IMMEDIATE NOTICE OF THE SUPERVISION TEAM.

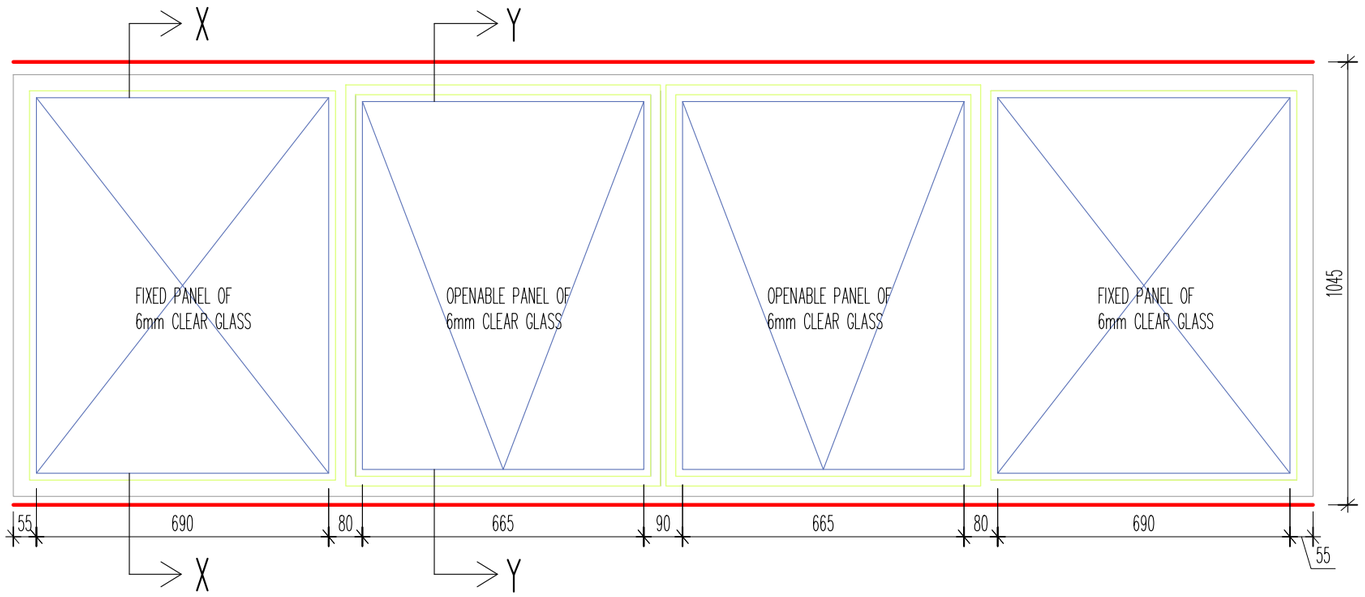

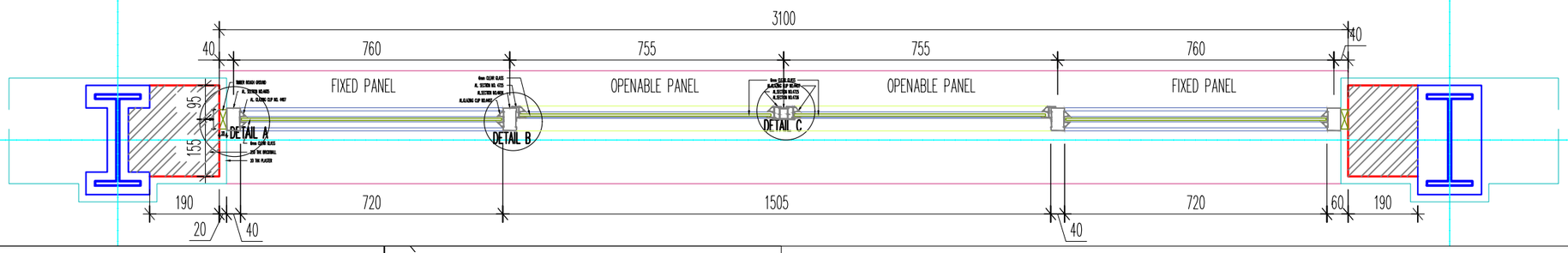

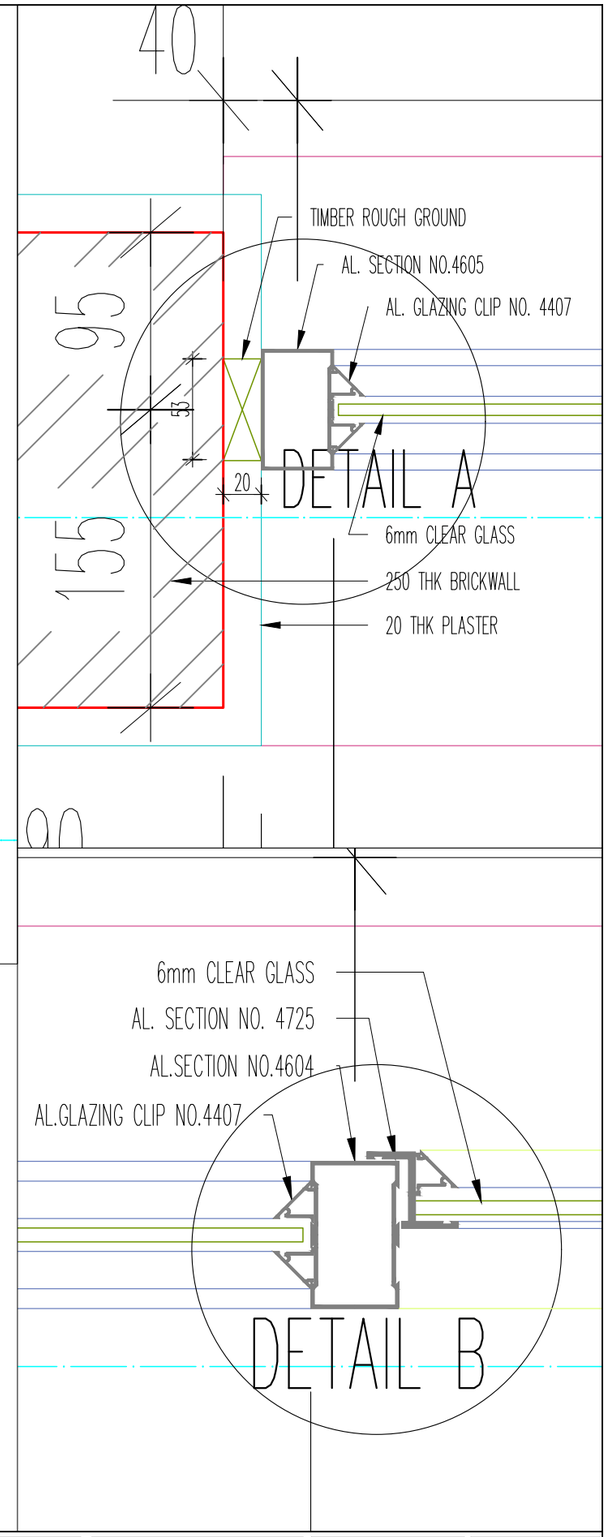

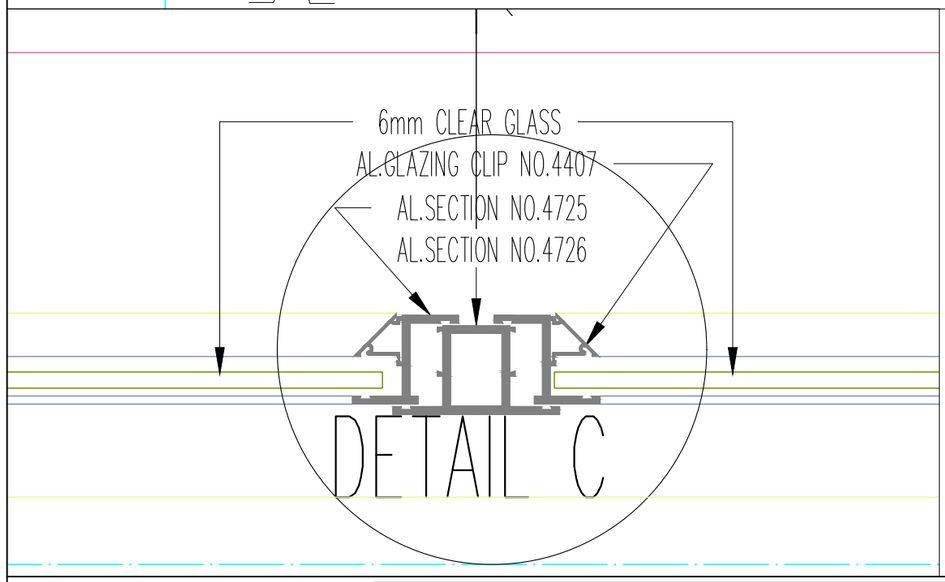

Khorlochhu

ARCHITECTURAL DRAWING

PROJECT TITLE	DRAWING TITLE
Construction of Doksum Primary School	VENTILATION_DETAILS

NOTES

1. ALL DIMENSIONS ARE IN MILLIMETER & ELEVATION IN METER UNLESS SPECIFIED OTHERWISE.
2. ALL DIMENSIONS MEASURE UNFINISHED SURFACES UNLESS SPECIFIED OTHERWISE.
3. DIMENSIONS ARE TO BE READ AND NOT SCALED OFF.
4. ANY DISCREPANCIES IN THE DRAWING ARE TO BE BROUGHT TO THE IMMEDIATE NOTICE OF THE SUPERVISION TEAM.

CHECKED	APPROVED	DATE	DRAWING NO.
			AR_25
		MARCH, 2026	SCALE
			NTS

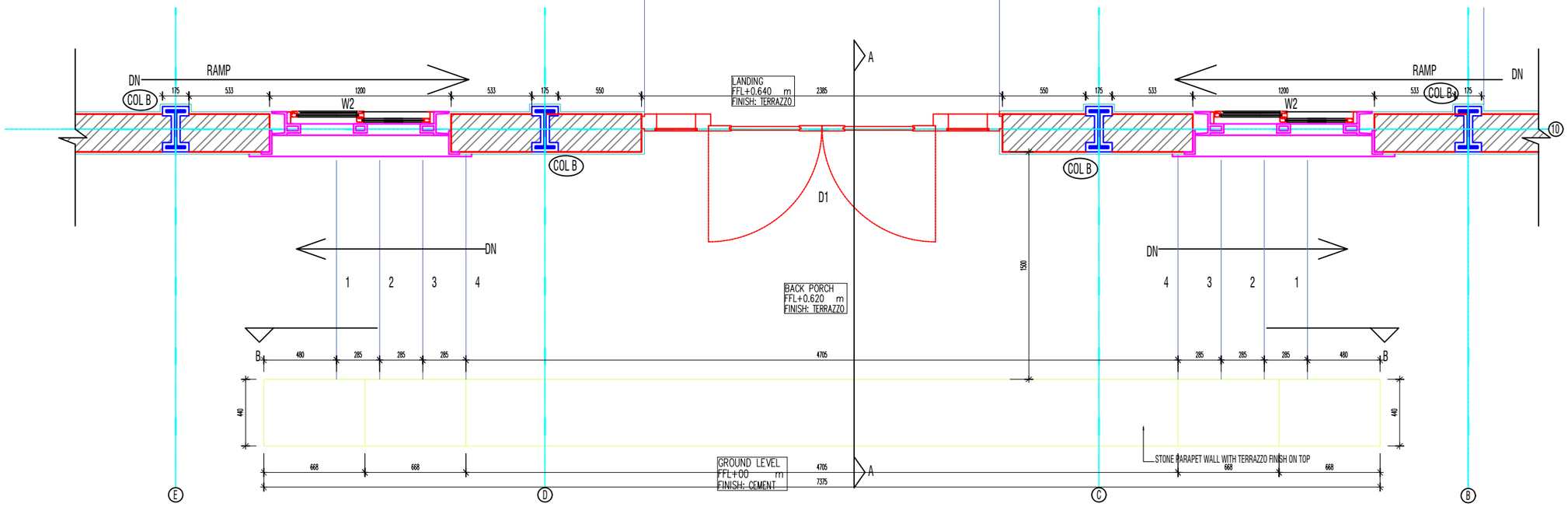

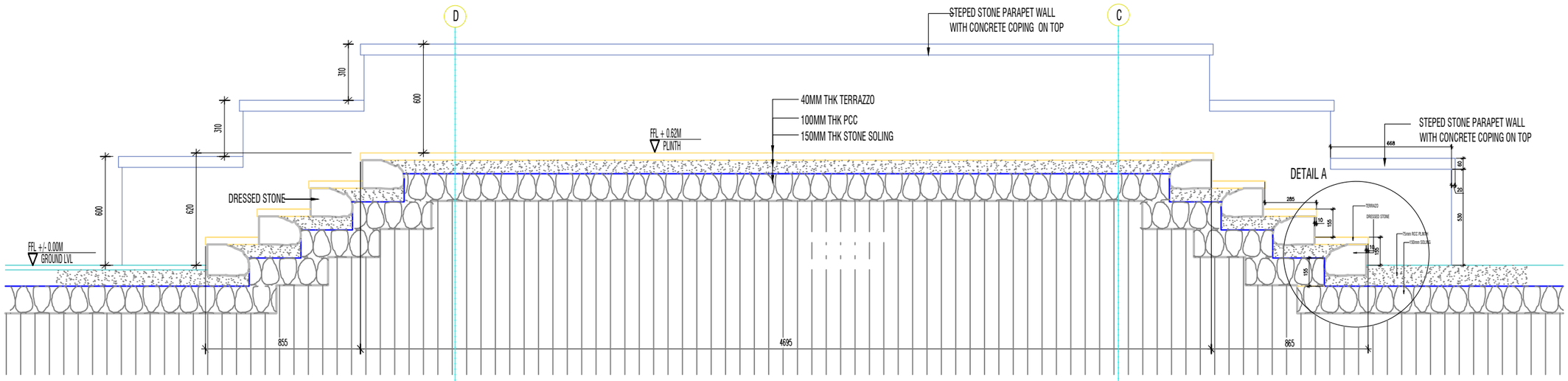

Khorlochhu

ARCHITECTURAL DRAWING

PROJECT TITLE	DRAWING TITLE
Construction of Doksum Primary School	BACK_PORCH_DETAILS

NOTES

1. ALL DIMENSIONS ARE IN MILLIMETER & ELEVATION IN METER UNLESS SPECIFIED OTHERWISE.
2. ALL DIMENSIONS MEASURE UNFINISHED SURFACES UNLESS SPECIFIED OTHERWISE.
3. DIMENSIONS ARE TO BE READ AND NOT SCALED OFF.
4. ANY DISCREPANCIES IN THE DRAWING ARE TO BE BROUGHT TO THE IMMEDIATE NOTICE OF THE SUPERVISION TEAM.

CHECKED	APPROVED	DATE	DRAWING NO.
			AR_26
		MARCH, 2026	SCALE
			NTS

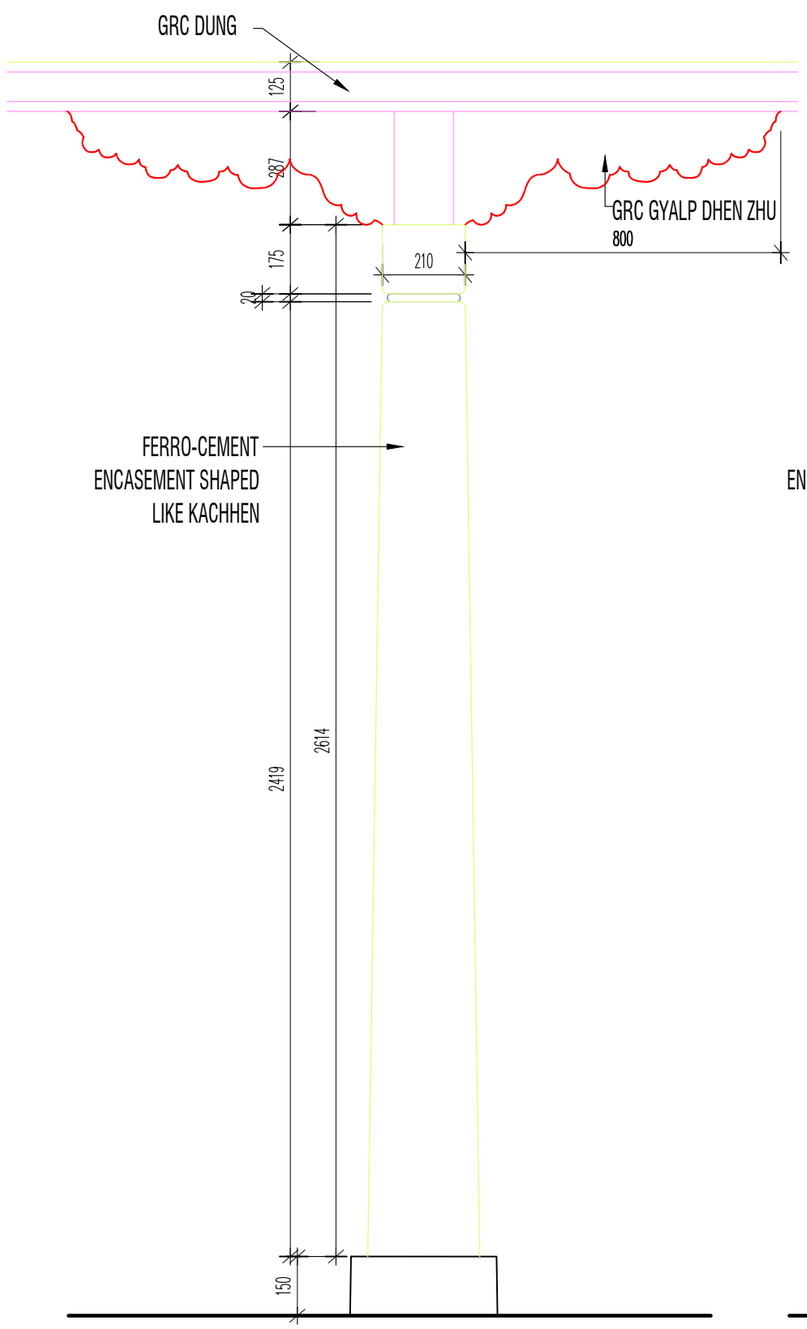

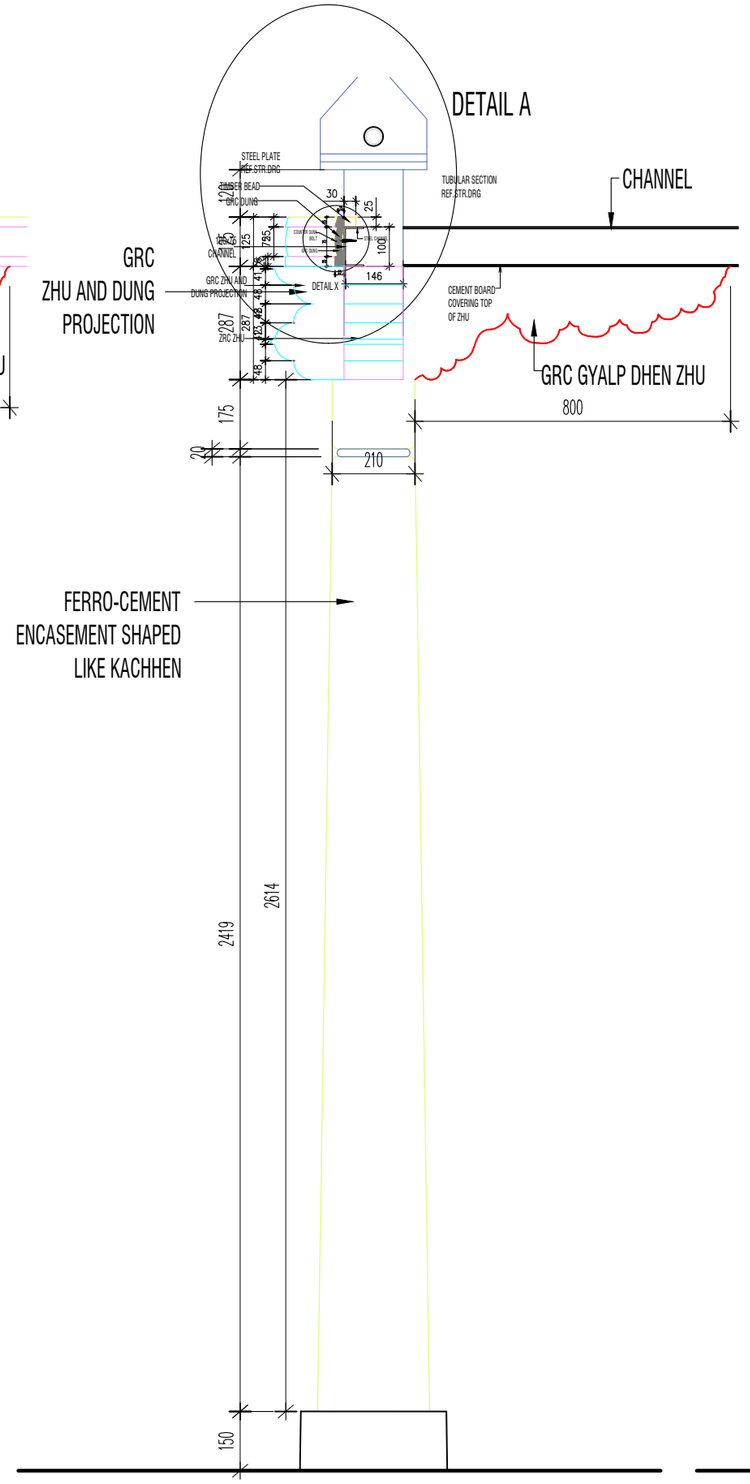

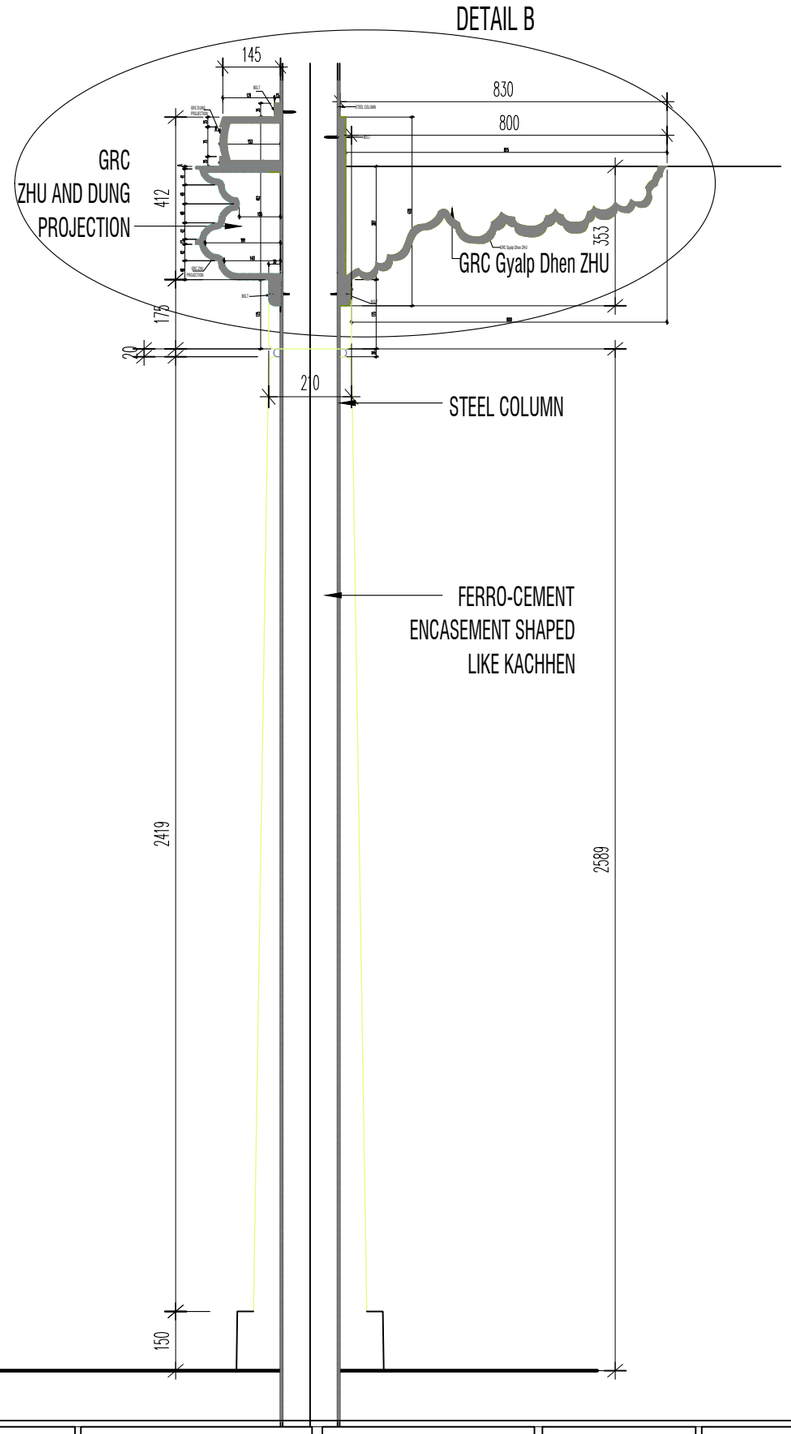

Khorlochhu

ARCHITECTURAL DRAWING

PROJECT TITLE	DRAWING TITLE
Construction of Doksum Primary School	KACHEN_DETAILS

NOTES

1. ALL DIMENSIONS ARE IN MILLIMETER & ELEVATION IN METER UNLESS SPECIFIED OTHERWISE.
2. ALL DIMENSIONS MEASURE UNFINISHED SURFACES UNLESS SPECIFIED OTHERWISE.
3. DIMENSIONS ARE TO BE READ AND NOT SCALED OFF.
4. ANY DISCREPANCIES IN THE DRAWING ARE TO BE BROUGHT TO THE IMMEDIATE NOTICE OF THE SUPERVISION TEAM.

CHECKED	APPROVED	DATE	DRAWING NO.
			AR_27
		MARCH, 2026	SCALE
			NTS

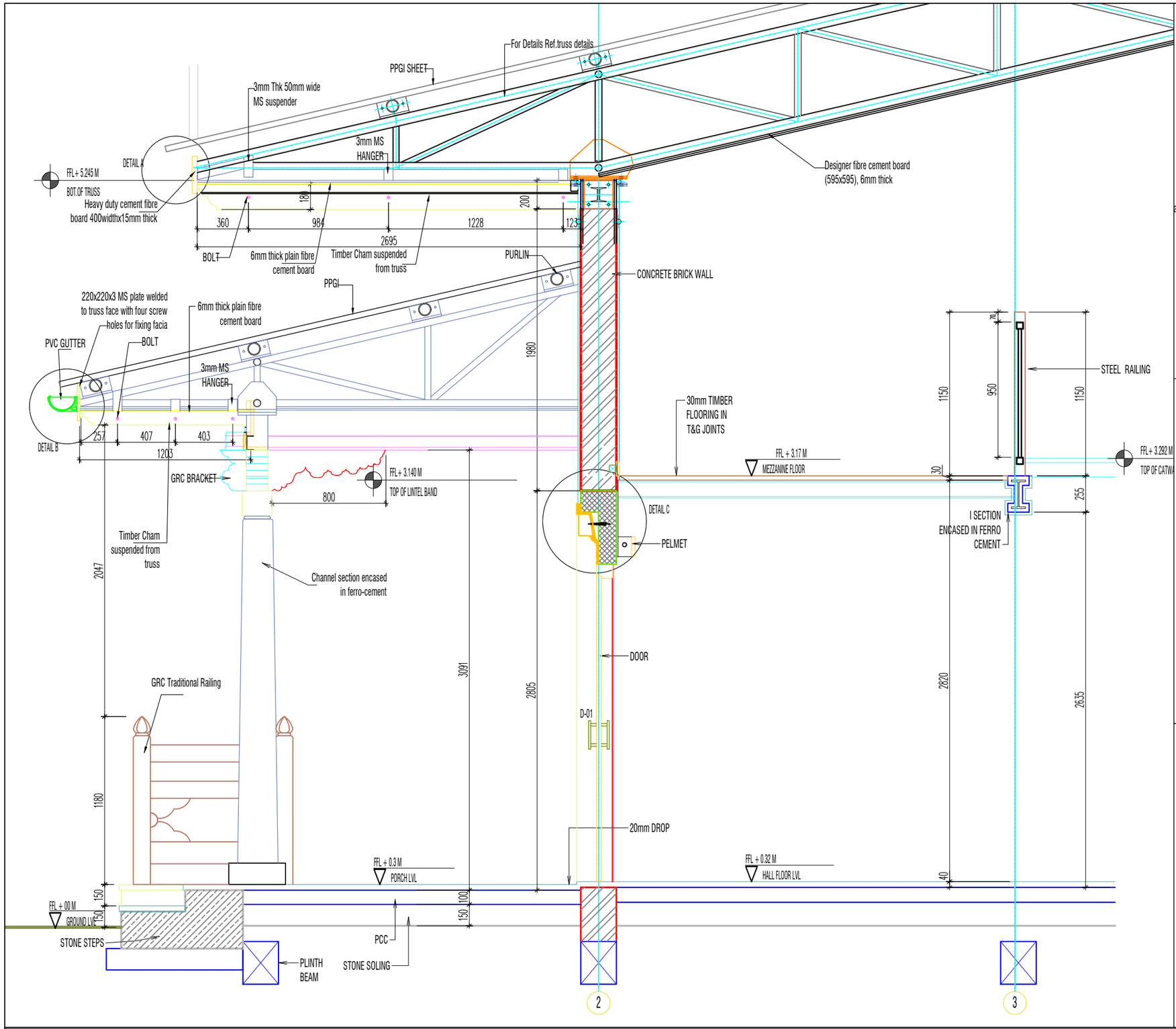

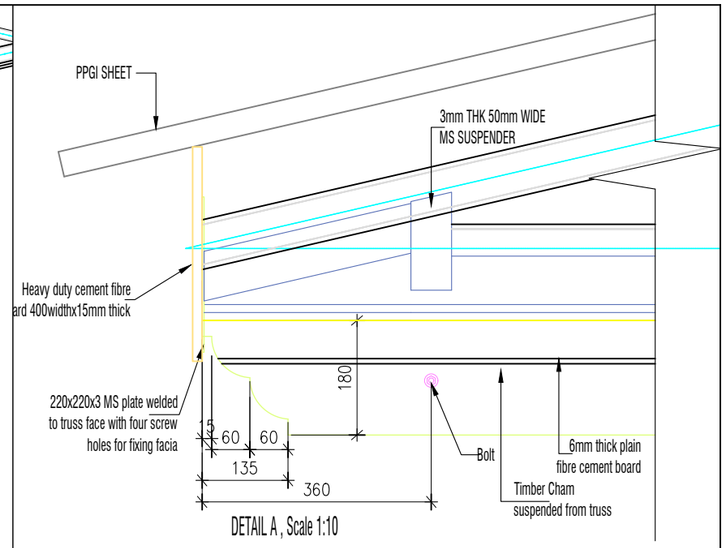

DETAIL A , Scale 1:10

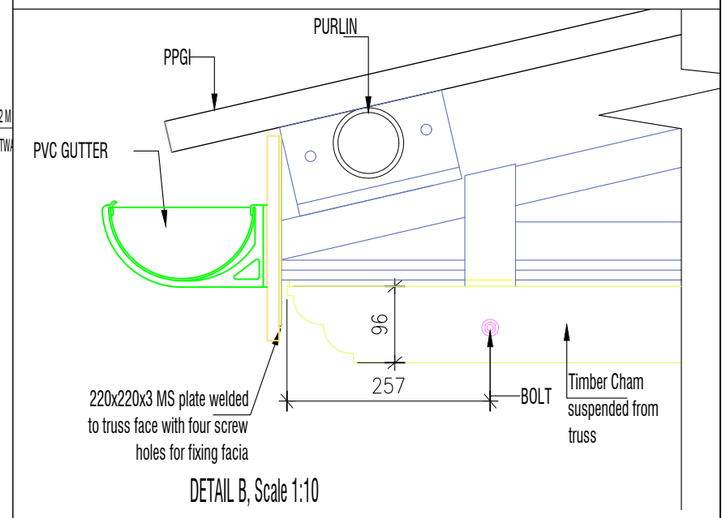

DETAIL B, Scale 1:10

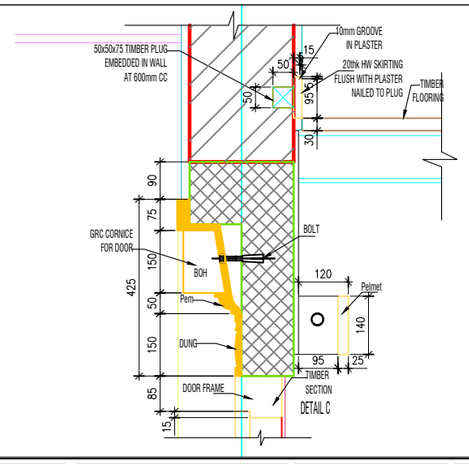

DETAIL C

Khorlochhu

ARCHITECTURAL DRAWING

PROJECT TITLE	DRAWING TITLE
Construction of Doksum Primary School	PORCH_DETAILS

NOTES

1. ALL DIMENSIONS ARE IN MILLIMETER & ELEVATION IN METER UNLESS SPECIFIED OTHERWISE.
2. ALL DIMENSIONS MEASURE UNFINISHED SURFACES UNLESS SPECIFIED OTHERWISE.
3. DIMENSIONS ARE TO BE READ AND NOT SCALED OFF.
4. ANY DISCREPANCIES IN THE DRAWING ARE TO BE BROUGHT TO THE IMMEDIATE NOTICE OF THE SUPERVISION TEAM.

CHECKED	APPROVED	DATE	DRAWING NO.
			AR_28
		MARCH, 2026	SCALE
			NTS

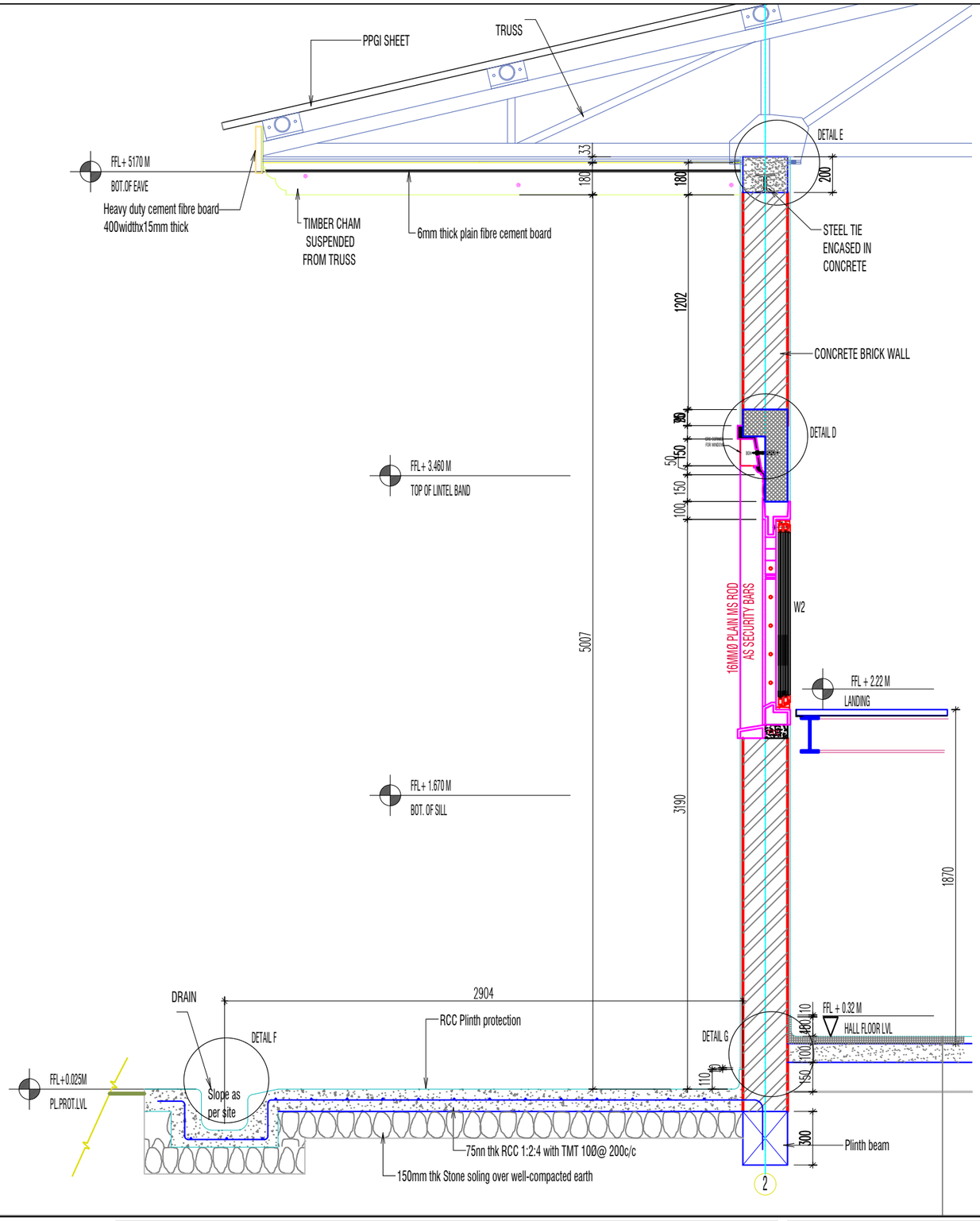

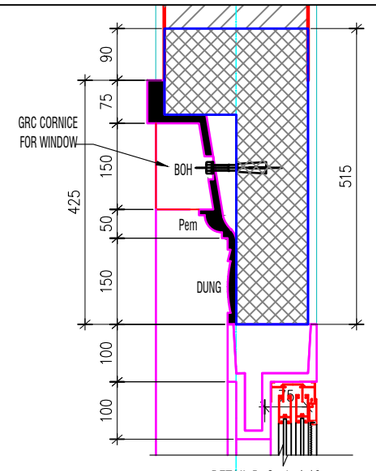

DETAIL D, Scale 1:10

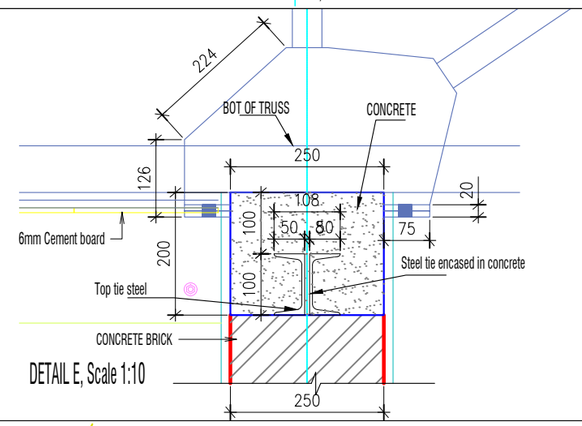

DETAIL E, Scale 1:10

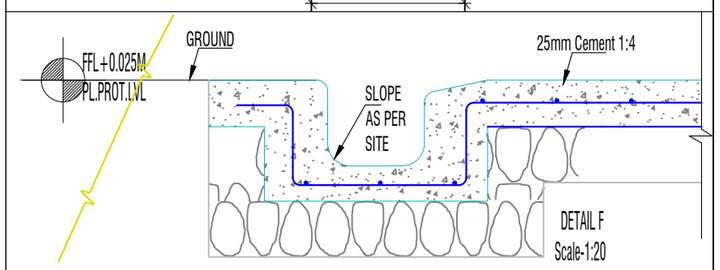

DETAIL F
Scale-1:20

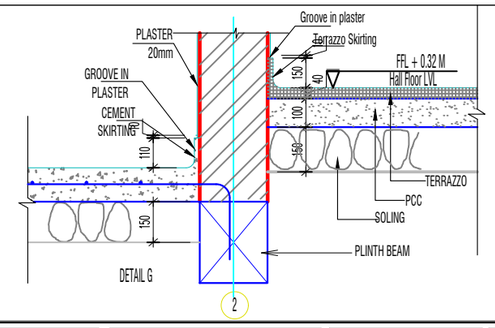

DETAIL G

ARCHITECTURAL DRAWING

PROJECT TITLE	DRAWING TITLE
Construction of Doksum Primary School	PLINTH_PROTECTION_&_OTHER_DETAILS

NOTES

1. ALL DIMENSIONS ARE IN MILLIMETER & ELEVATION IN METER UNLESS SPECIFIED OTHERWISE.
2. ALL DIMENSIONS MEASURE UNFINISHED SURFACES UNLESS SPECIFIED OTHERWISE.
3. DIMENSIONS ARE TO BE READ AND NOT SCALED OFF.
4. ANY DISCREPANCIES IN THE DRAWING ARE TO BE BROUGHT TO THE IMMEDIATE NOTICE OF THE SUPERVISION TEAM.

CHECKED	APPROVED	DATE	DRAWING NO.
			AR_29
		MARCH, 2026	SCALE
			NTS

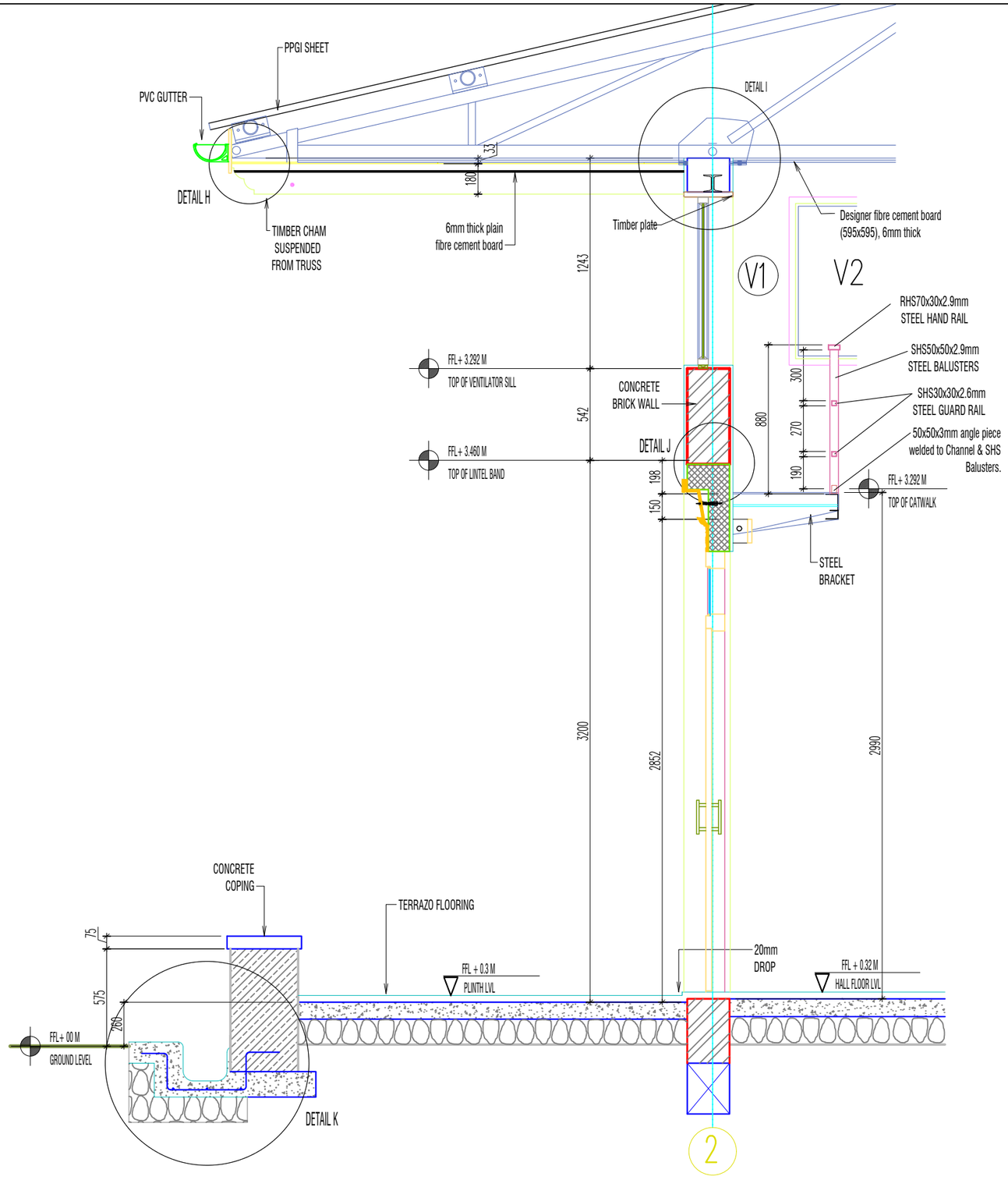

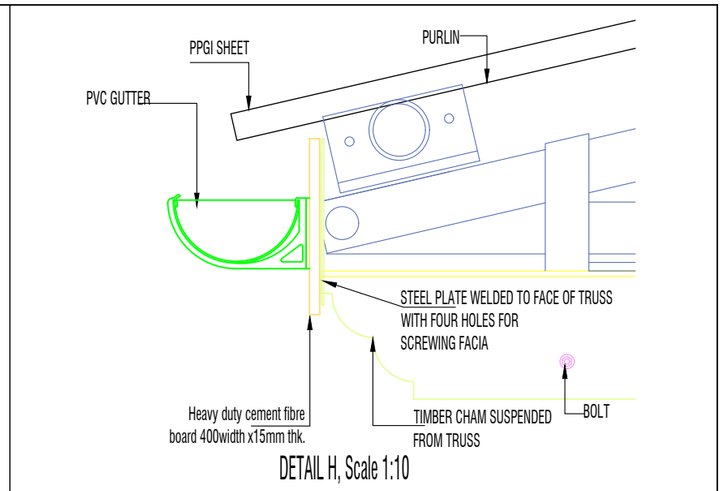

DETAIL H, Scale 1:10

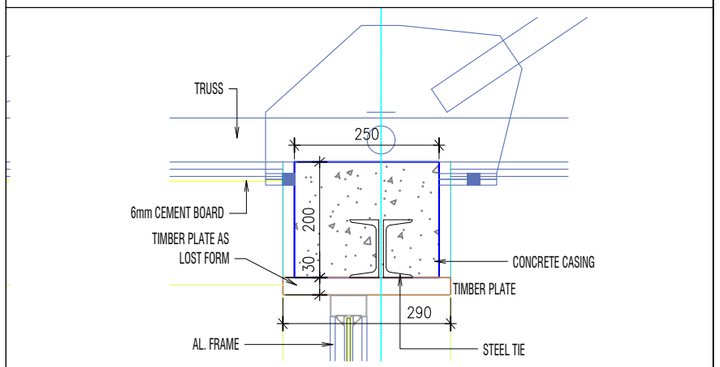

DETAIL I, Scale 1:10

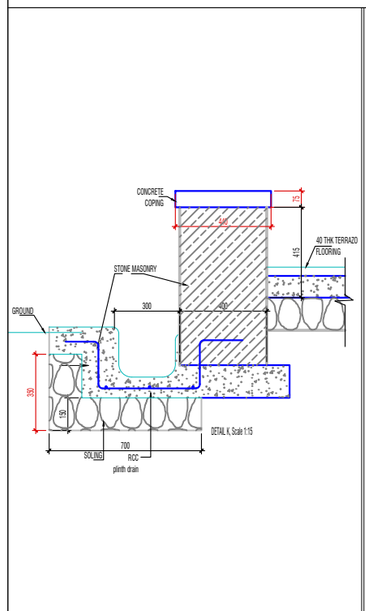

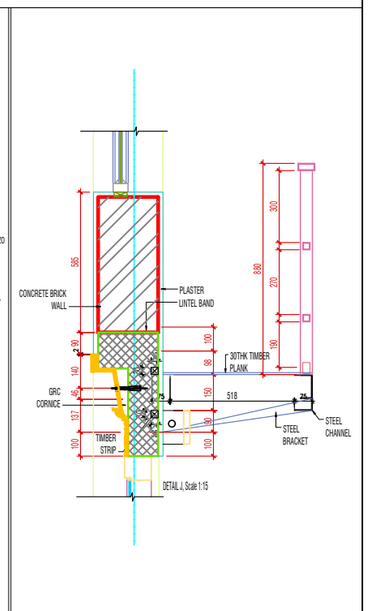

Khorlochhu

ARCHITECTURAL DRAWING

PROJECT TITLE	DRAWING TITLE
Construction of Doksum Primary School	PLINTH_PROTECTION_&_OTHER_DETAILS

NOTES

1. ALL DIMENSIONS ARE IN MILLIMETER & ELEVATION IN METER UNLESS SPECIFIED OTHERWISE.
2. ALL DIMENSIONS MEASURE UNFINISHED SURFACES UNLESS SPECIFIED OTHERWISE.
3. DIMENSIONS ARE TO BE READ AND NOT SCALED OFF.
4. ANY DISCREPANCIES IN THE DRAWING ARE TO BE BROUGHT TO THE IMMEDIATE NOTICE OF THE SUPERVISION TEAM.

CHECKED	APPROVED	DATE	DRAWING NO.
			AR_30
		MARCH, 2026	SCALE
			NTS

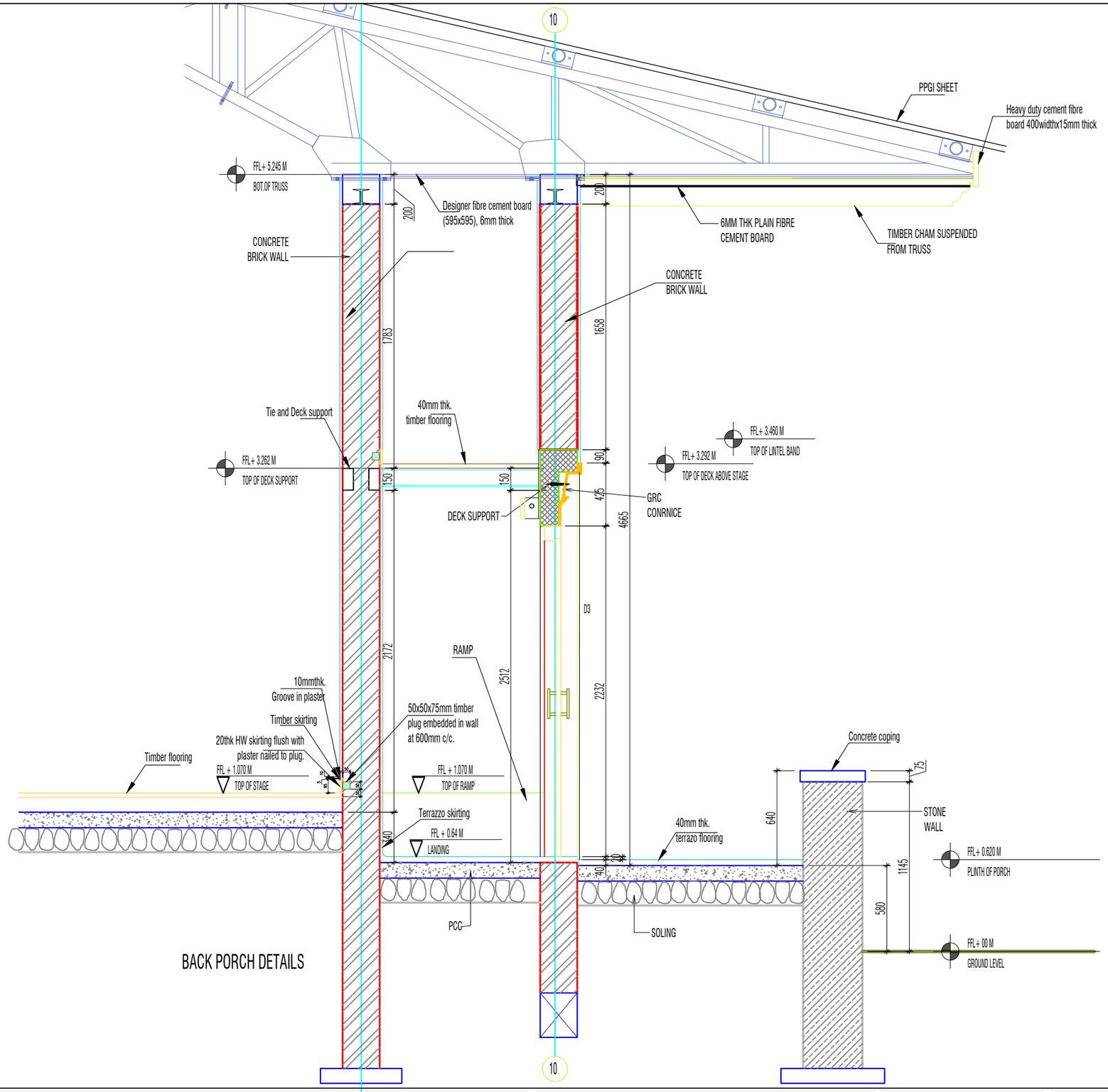

BACK PORCH DETAILS

Khorlochhu

ARCHITECTURAL DRAWING

PROJECT TITLE	DRAWING TITLE
Construction of Doksum Primary School	BACK_PORCH_DETAILS

NOTES

1. ALL DIMENSIONS ARE IN MILLIMETER & ELEVATION IN METER UNLESS SPECIFIED OTHERWISE.
2. ALL DIMENSIONS MEASURE UNFINISHED SURFACES UNLESS SPECIFIED OTHERWISE.
3. DIMENSIONS ARE TO BE READ AND NOT SCALED OFF.
4. ANY DISCREPANCIES IN THE DRAWING ARE TO BE BROUGHT TO THE IMMEDIATE NOTICE OF THE SUPERVISION TEAM.

CHECKED	APPROVED	DATE	DRAWING NO.
			AR_31
		MARCH, 2026	SCALE
			NTS

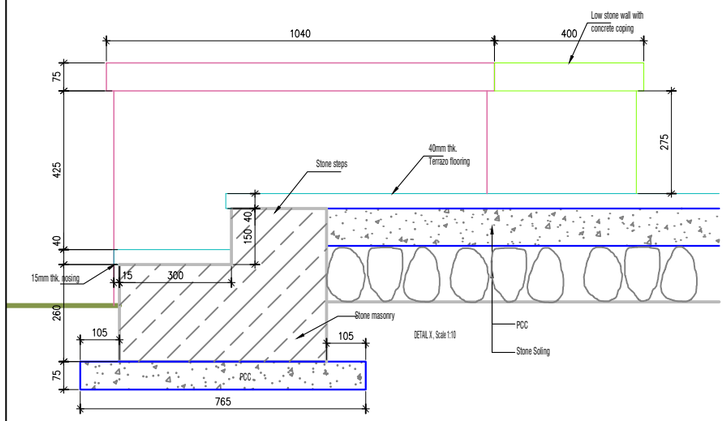

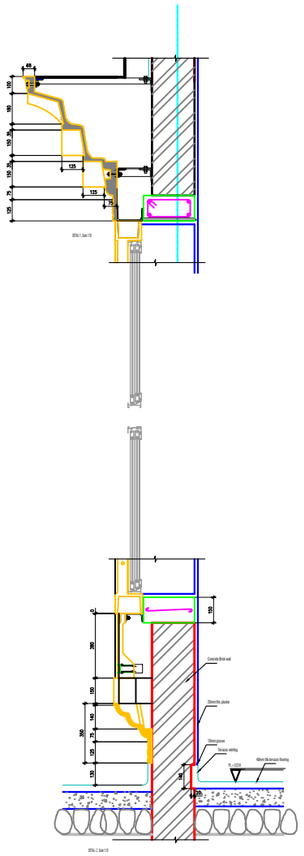

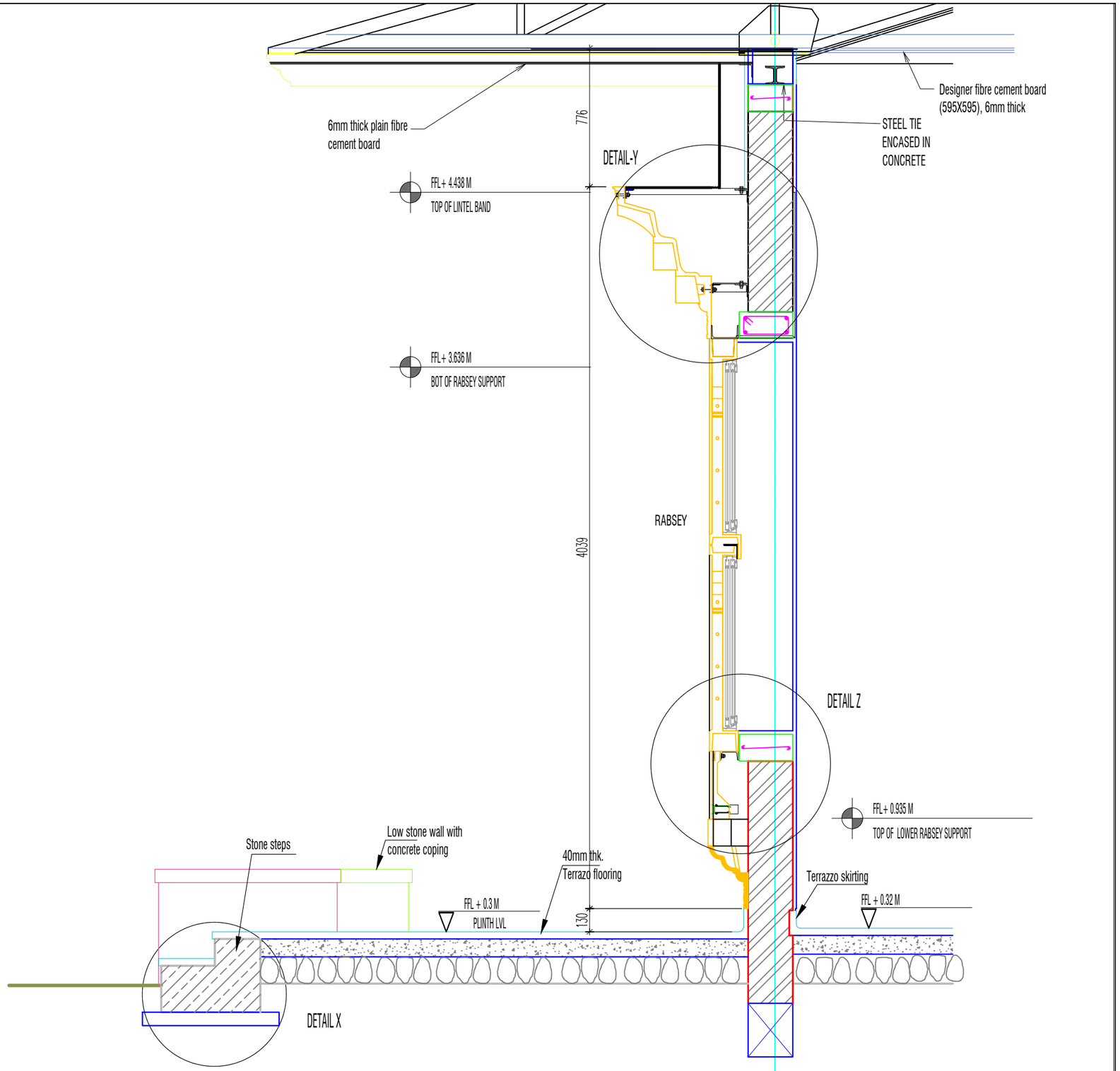

Khorlochhu

ARCHITECTURAL DRAWING

PROJECT TITLE	DRAWING TITLE
Construction of Doksum Primary School	RABSEY_FIXING_DETAILS

NOTES

1. ALL DIMENSIONS ARE IN MILLIMETER & ELEVATION IN METER UNLESS SPECIFIED OTHERWISE.
2. ALL DIMENSIONS MEASURE UNFINISHED SURFACES UNLESS SPECIFIED OTHERWISE.
3. DIMENSIONS ARE TO BE READ AND NOT SCALED OFF.
4. ANY DISCREPANCIES IN THE DRAWING ARE TO BE BROUGHT TO THE IMMEDIATE NOTICE OF THE SUPERVISION TEAM.

CHECKED	APPROVED	DATE	DRAWING NO.
			AR_32
		MARCH, 2026	SCALE
			NTS

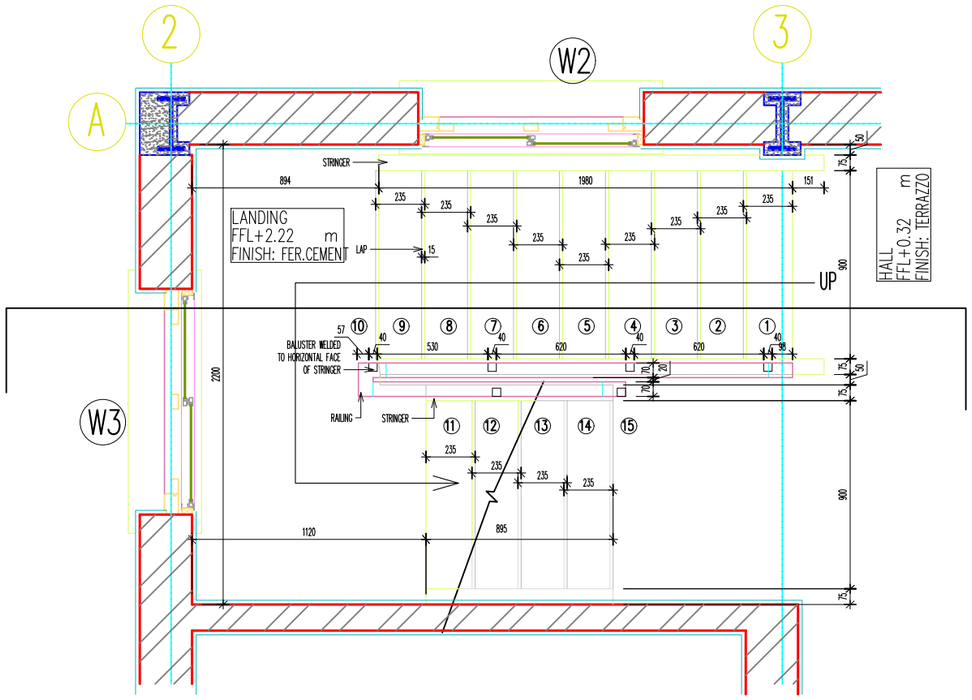

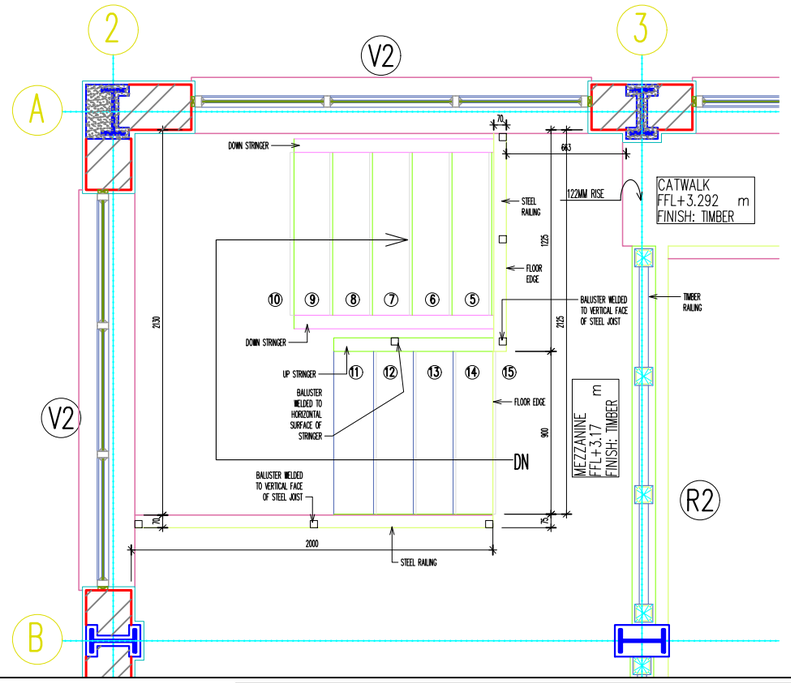

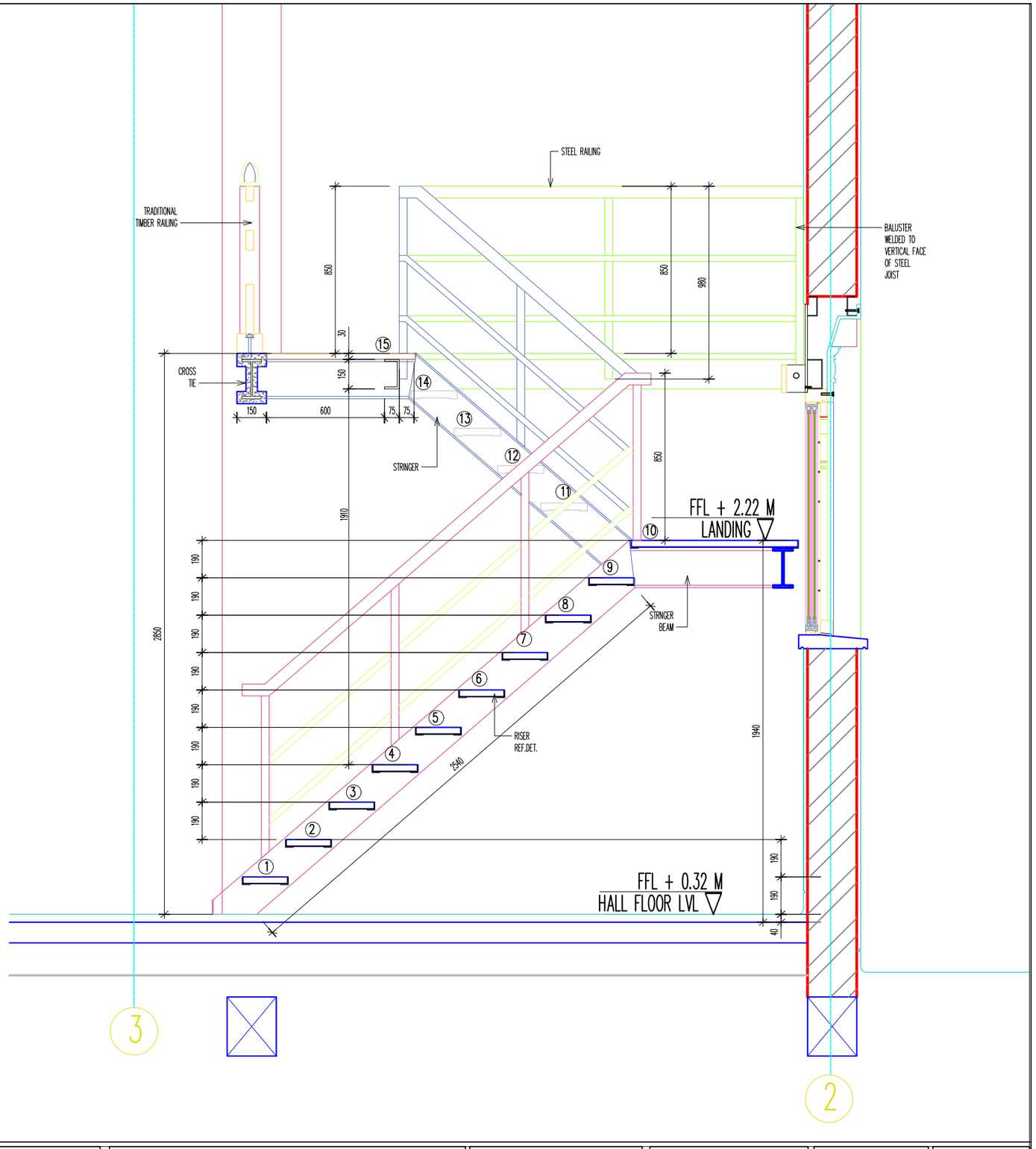

Khorlochhu

ARCHITECTURAL DRAWING

PROJECT TITLE	DRAWING TITLE
Construction of Doksum Primary School	STAIRCASE_DETAILS

NOTES

1. ALL DIMENSIONS ARE IN MILLIMETER & ELEVATION IN METER UNLESS SPECIFIED OTHERWISE.
2. ALL DIMENSIONS MEASURE UNFINISHED SURFACES UNLESS SPECIFIED OTHERWISE.
3. DIMENSIONS ARE TO BE READ AND NOT SCALED OFF.
4. ANY DISCREPANCIES IN THE DRAWING ARE TO BE BROUGHT TO THE IMMEDIATE NOTICE OF THE SUPERVISION TEAM.

CHECKED	APPROVED	DATE	DRAWING NO.
			AR_33
		MARCH, 2026	SCALE
			NTS

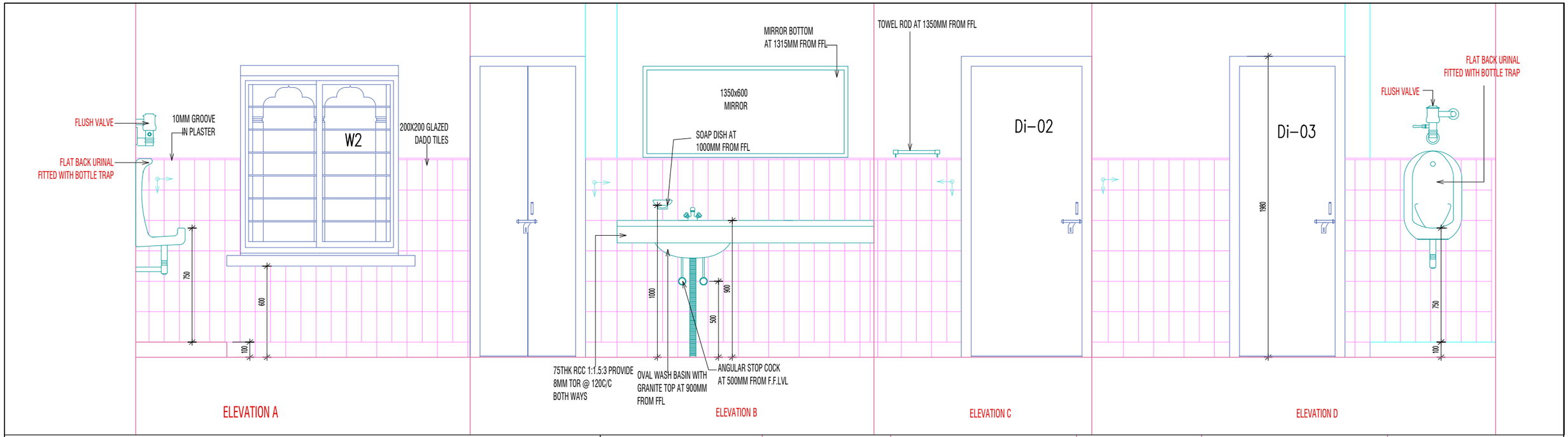

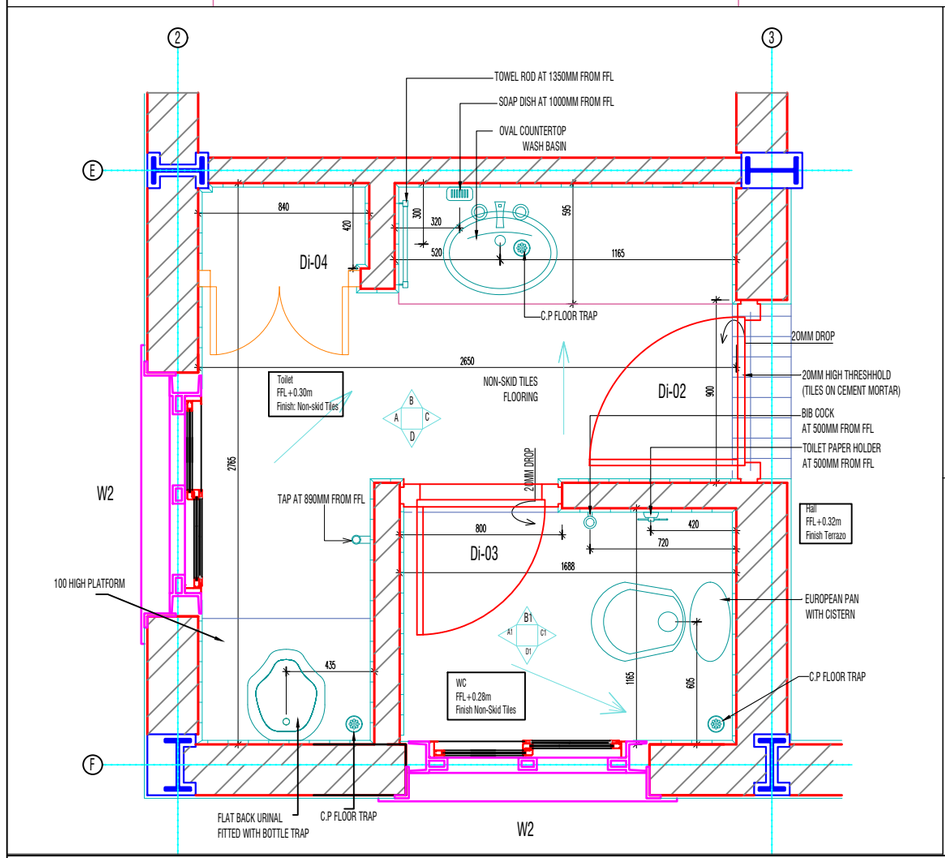

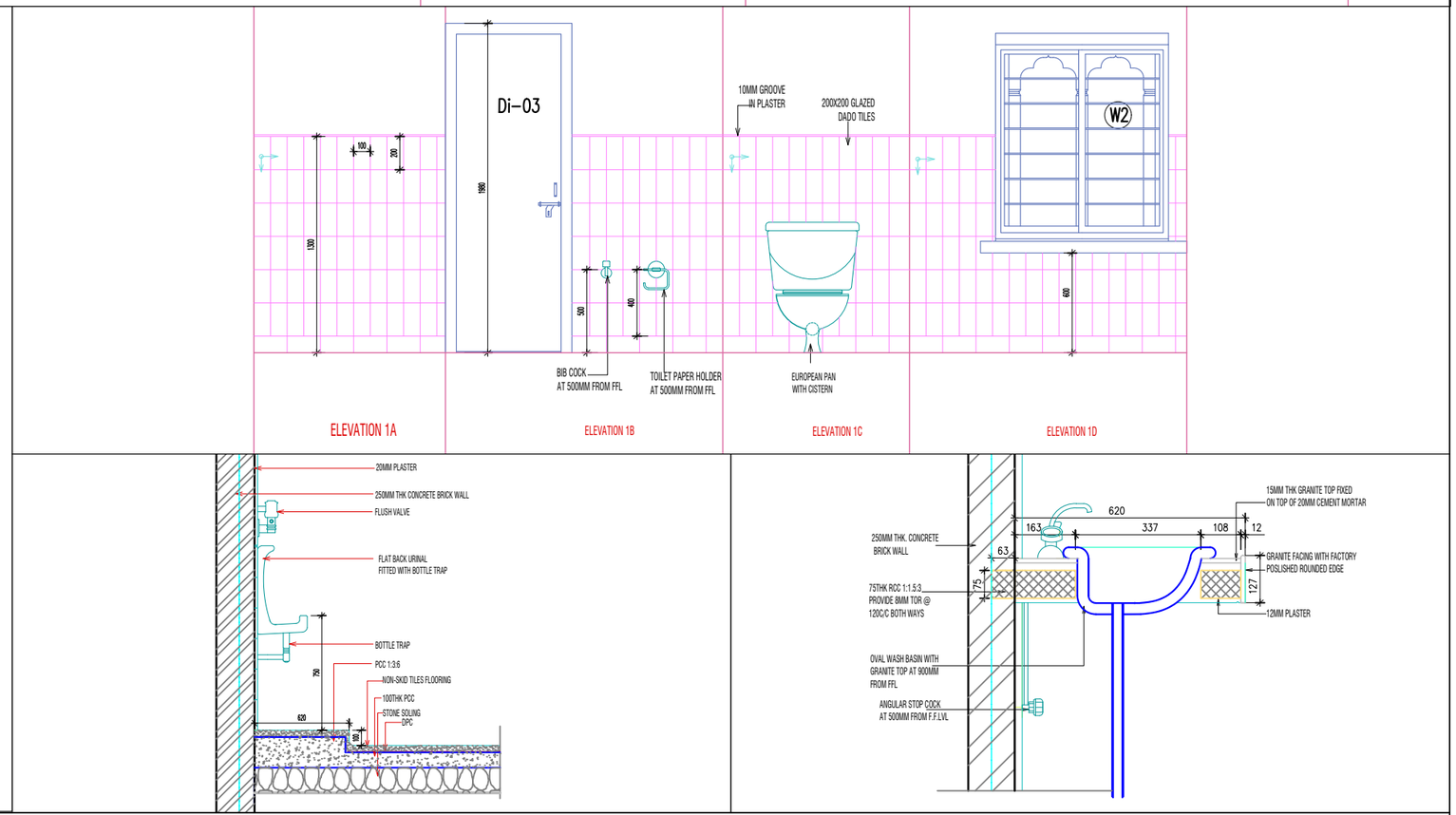

Khorlochhu

ARCHITECTURAL DRAWING

PROJECT TITLE	DRAWING TITLE
Construction of Doksum Primary School	TOILET_DETAILS

NOTES

1. ALL DIMENSIONS ARE IN MILLIMETER & ELEVATION IN METER UNLESS SPECIFIED OTHERWISE.
2. ALL DIMENSIONS MEASURE UNFINISHED SURFACES UNLESS SPECIFIED OTHERWISE.
3. DIMENSIONS ARE TO BE READ AND NOT SCALED OFF.
4. ANY DISCREPANCIES IN THE DRAWING ARE TO BE BROUGHT TO THE IMMEDIATE NOTICE OF THE SUPERVISION TEAM.

CHECKED	APPROVED	DATE	DRAWING NO.
			AR_34
		MARCH, 2026	SCALE
			NTS

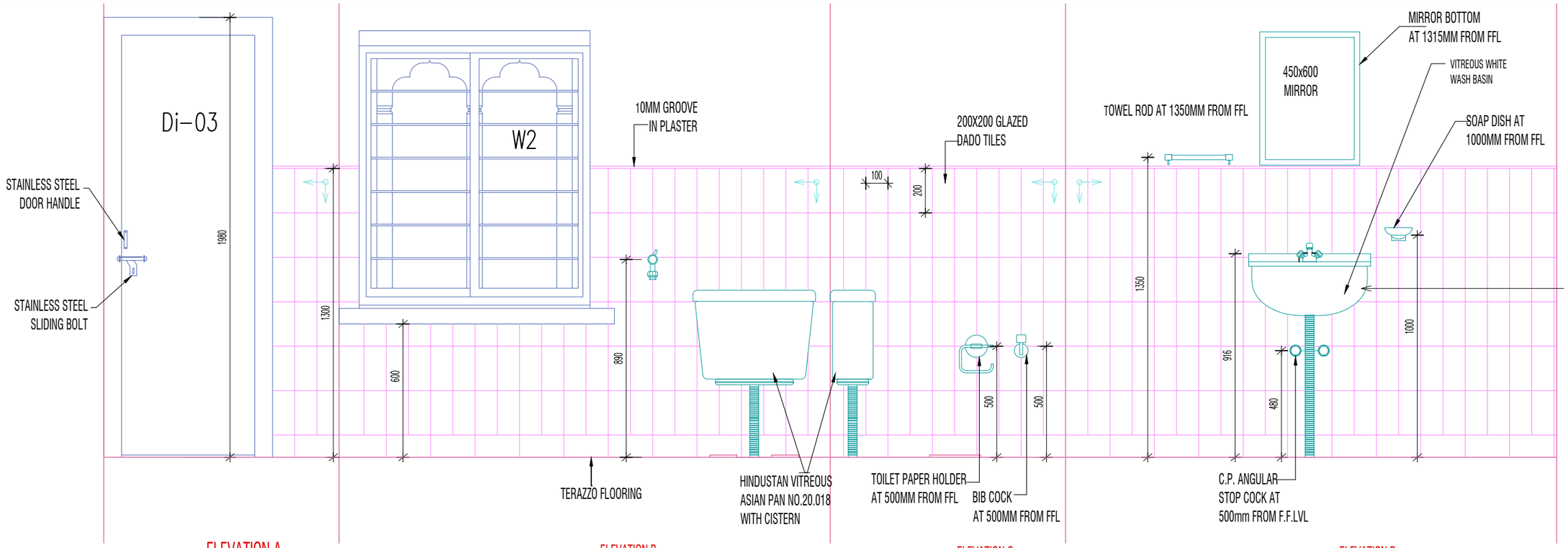

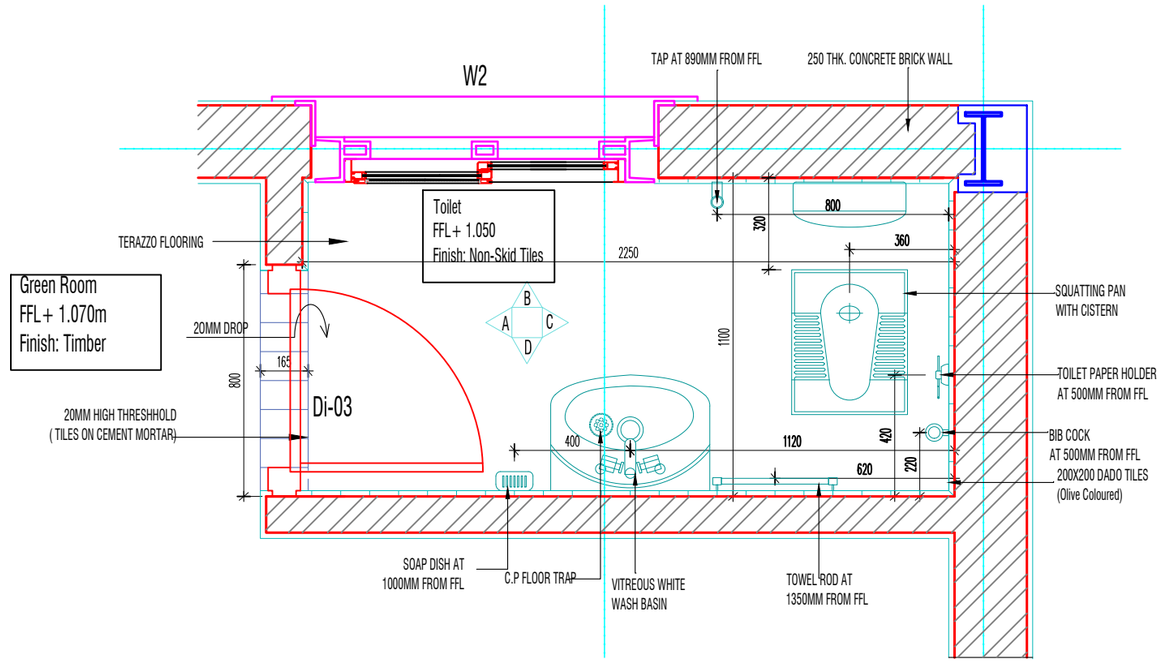

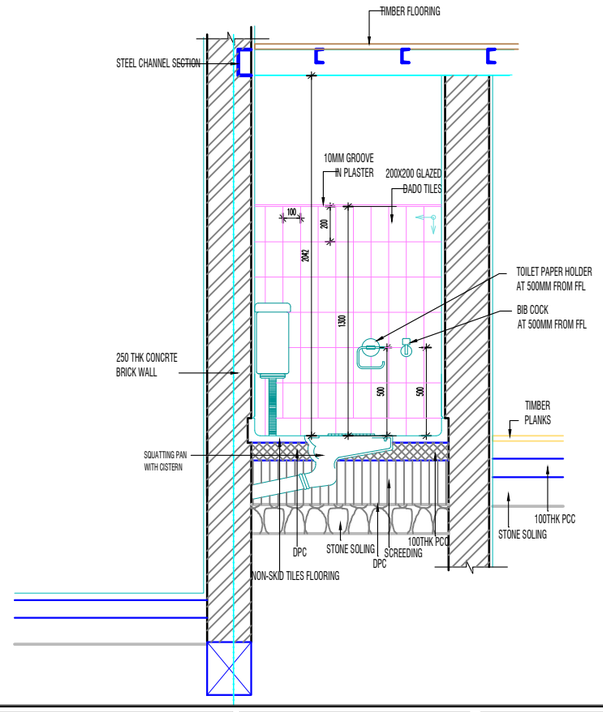

Khorlochhu

ARCHITECTURAL DRAWING

PROJECT TITLE	DRAWING TITLE
Construction of Doksum Primary School	TOILET_DETAILS

NOTES

1. ALL DIMENSIONS ARE IN MILLIMETER & ELEVATION IN METER UNLESS SPECIFIED OTHERWISE.
2. ALL DIMENSIONS MEASURE UNFINISHED SURFACES UNLESS SPECIFIED OTHERWISE.
3. DIMENSIONS ARE TO BE READ AND NOT SCALED OFF.
4. ANY DISCREPANCIES IN THE DRAWING ARE TO BE BROUGHT TO THE IMMEDIATE NOTICE OF THE SUPERVISION TEAM.

CHECKED	APPROVED	DATE	DRAWING NO.
			AR_35
		MARCH, 2026	SCALE
			NTS

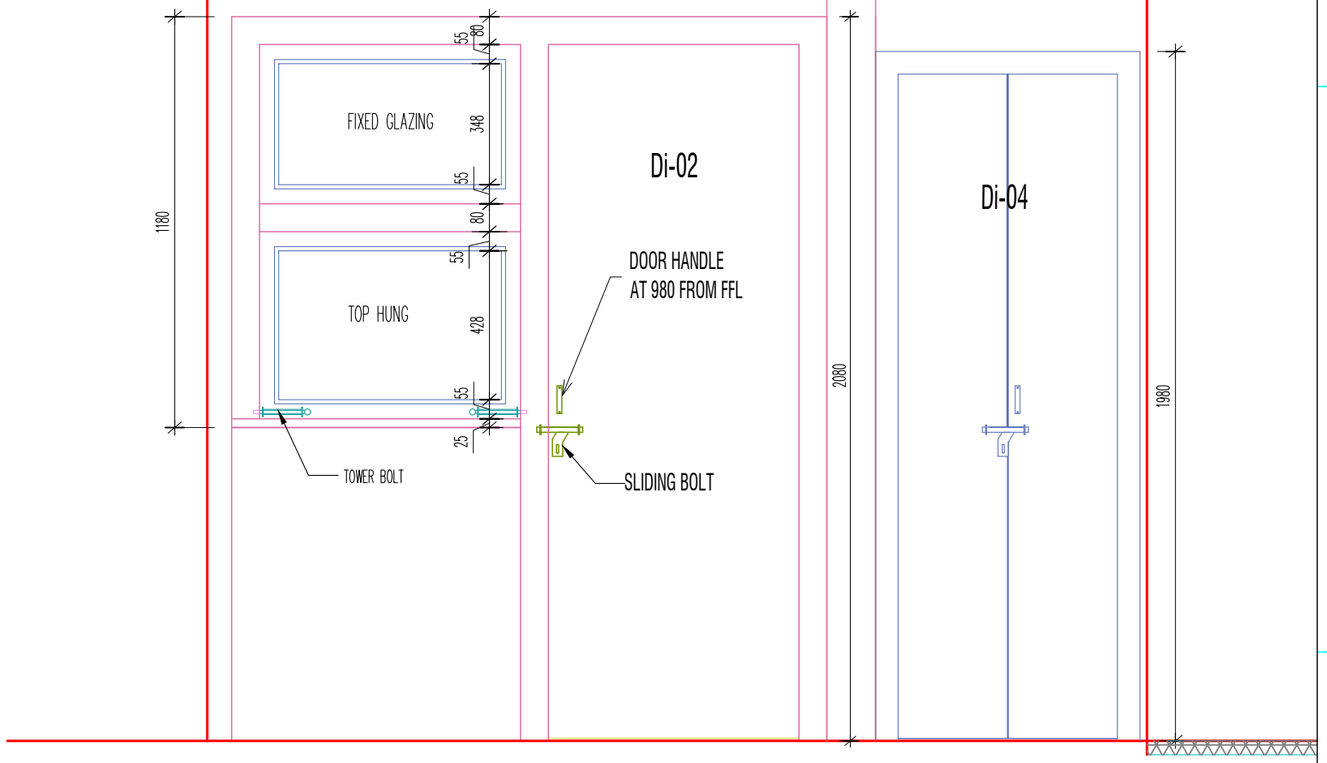

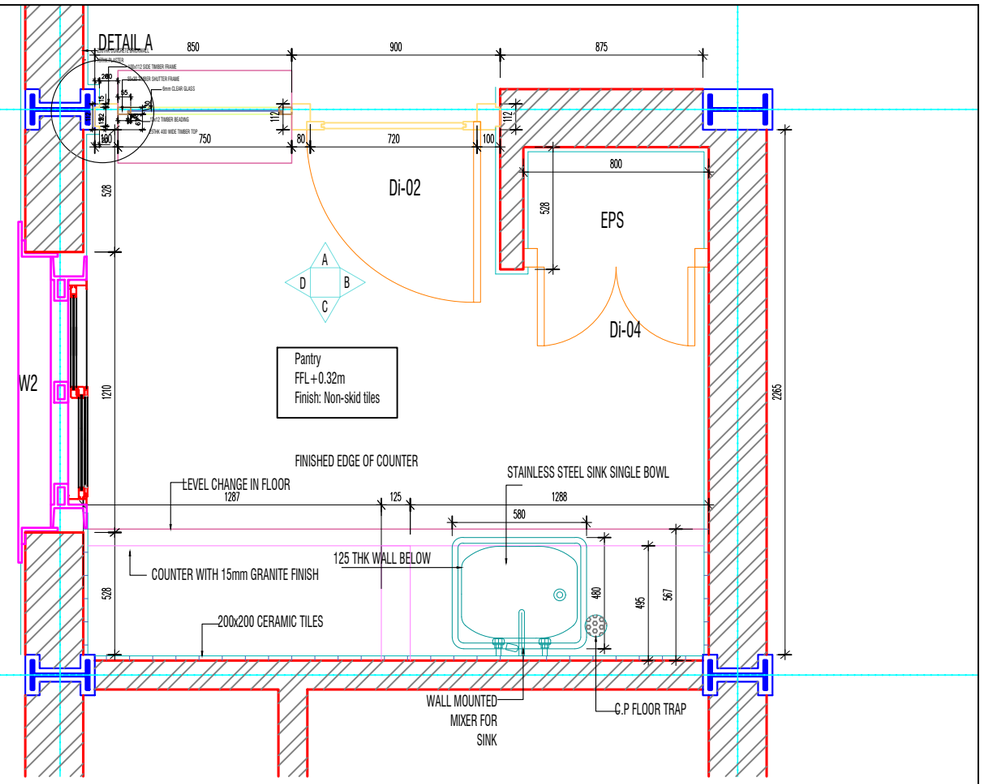

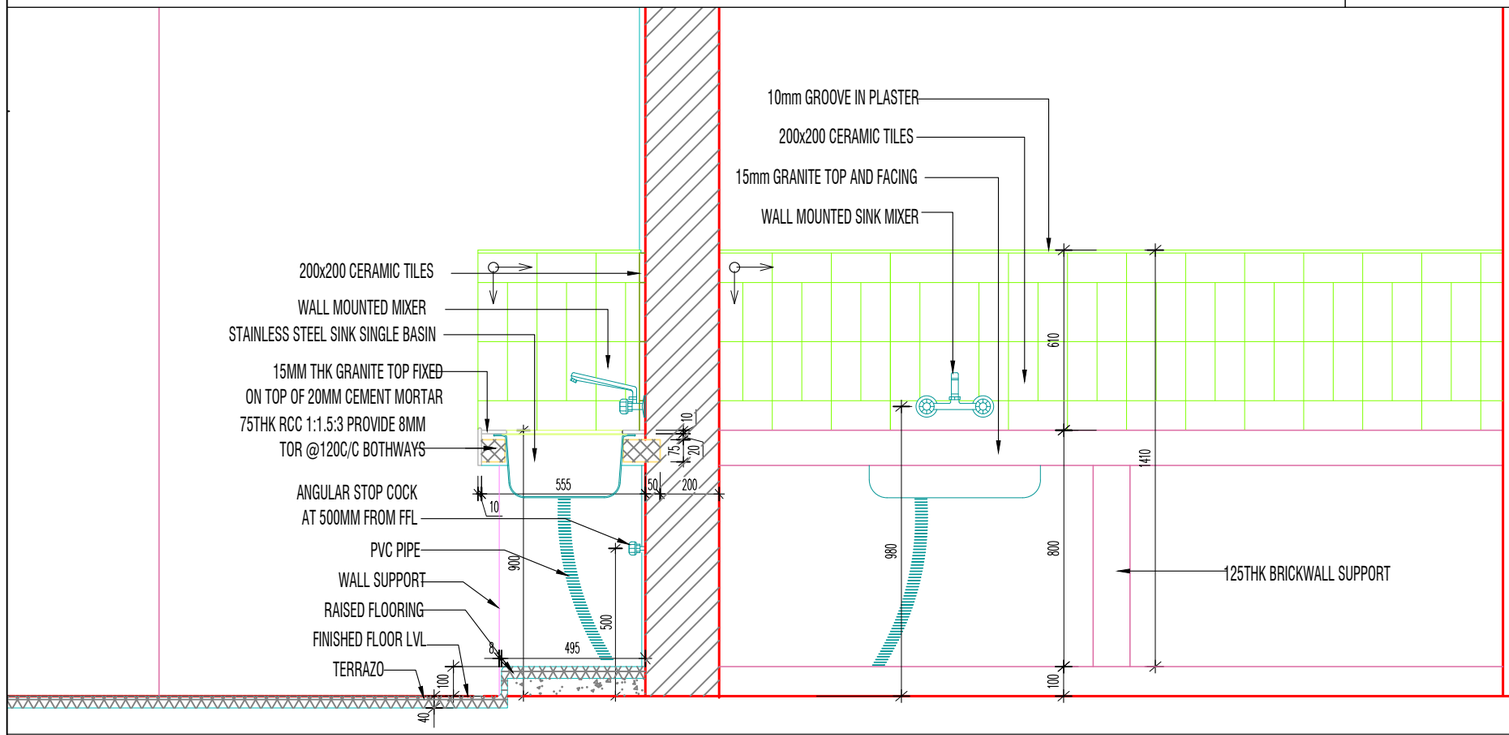

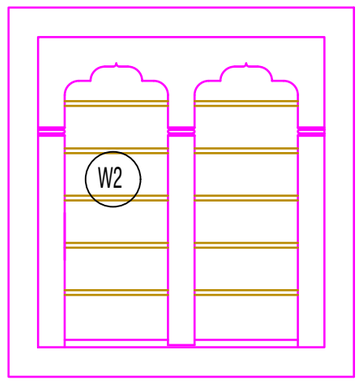

Khorlochhu

ARCHITECTURAL DRAWING

PROJECT TITLE	DRAWING TITLE
Construction of Doksum Primary School	PANTRY_DETAILS

NOTES

1. ALL DIMENSIONS ARE IN MILLIMETER & ELEVATION IN METER UNLESS SPECIFIED OTHERWISE.
2. ALL DIMENSIONS MEASURE UNFINISHED SURFACES UNLESS SPECIFIED OTHERWISE.
3. DIMENSIONS ARE TO BE READ AND NOT SCALED OFF.
4. ANY DISCREPANCIES IN THE DRAWING ARE TO BE BROUGHT TO THE IMMEDIATE NOTICE OF THE SUPERVISION TEAM.

CHECKED	APPROVED	DATE	DRAWING NO.
			AR_36
		MARCH, 2026	SCALE
			NTS

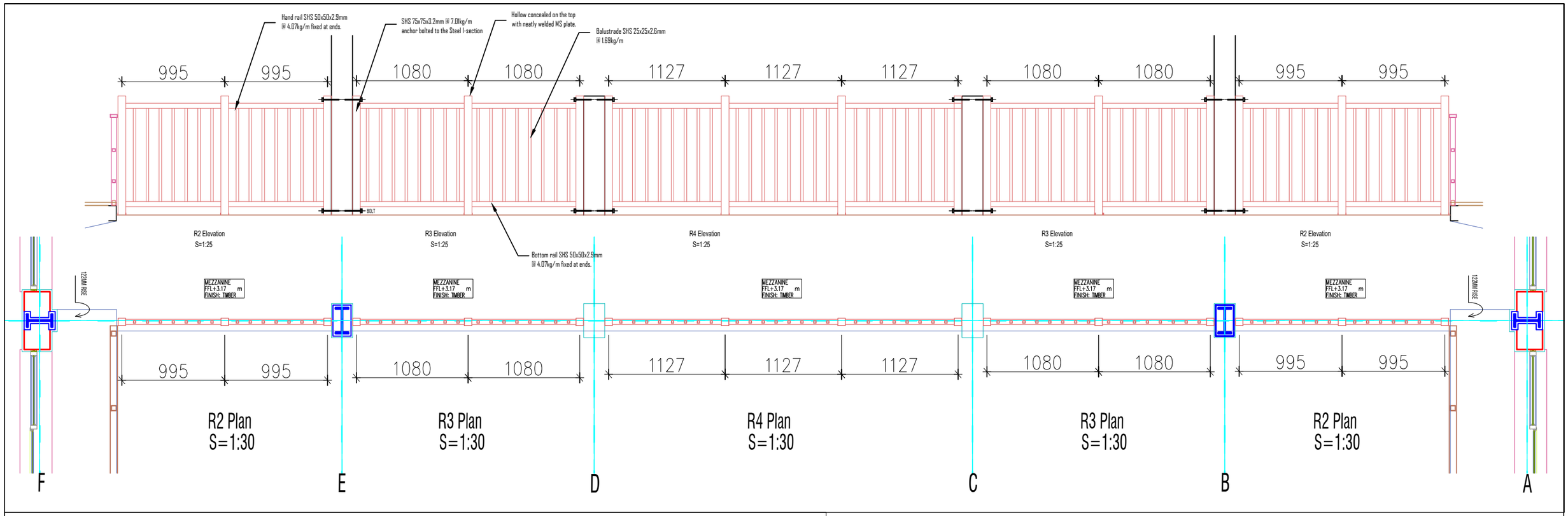

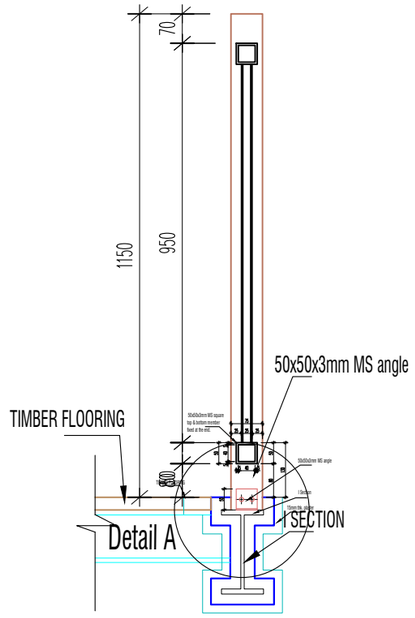

Mezzanine Railing R2,R3 & R4 Details
S=1:15

Khorlochhu

ARCHITECTURAL DRAWING

PROJECT TITLE	DRAWING TITLE
Construction of Doksum Primary School	RAILING_DETAILS

NOTES

1. ALL DIMENSIONS ARE IN MILLIMETER & ELEVATION IN METER UNLESS SPECIFIED OTHERWISE.
2. ALL DIMENSIONS MEASURE UNFINISHED SURFACES UNLESS SPECIFIED OTHERWISE.
3. DIMENSIONS ARE TO BE READ AND NOT SCALED OFF.
4. ANY DISCREPANCIES IN THE DRAWING ARE TO BE BROUGHT TO THE IMMEDIATE NOTICE OF THE SUPERVISION TEAM.

CHECKED	APPROVED	DATE	DRAWING NO.
			AR_37
		MARCH, 2026	SCALE
			NTS

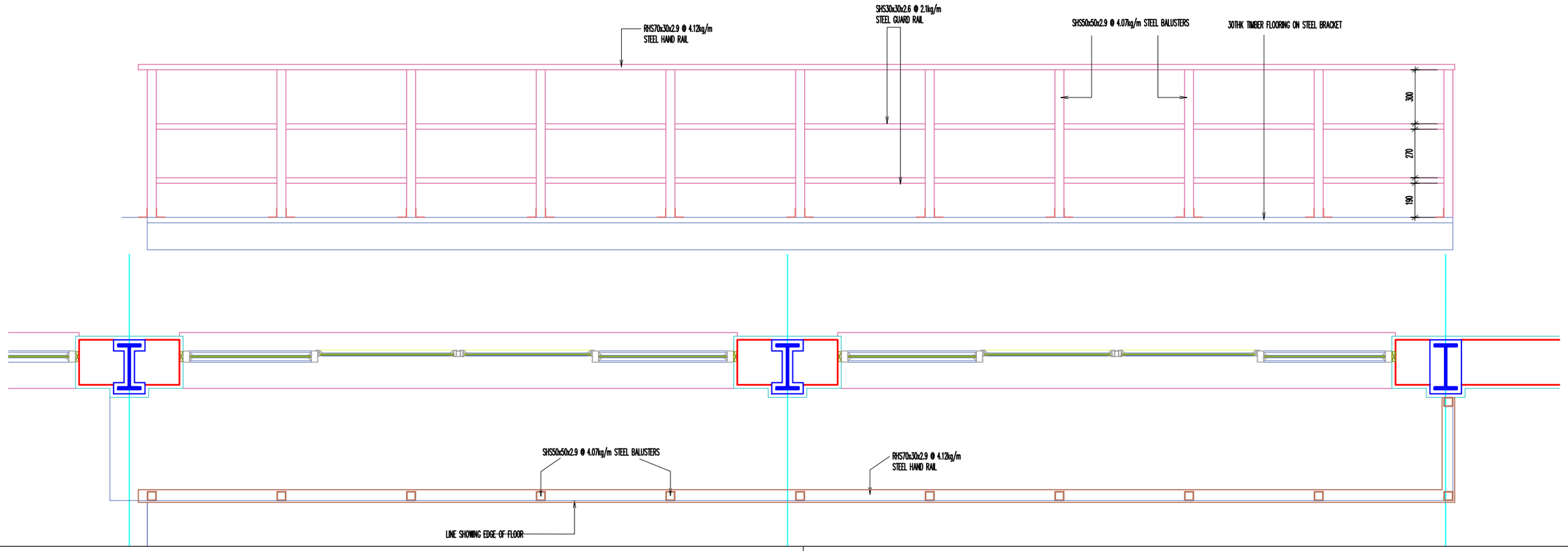

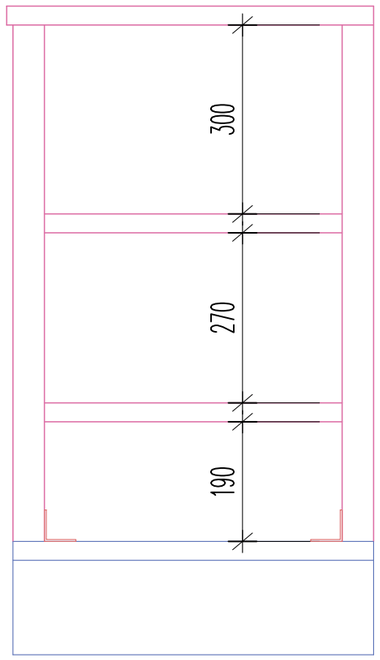

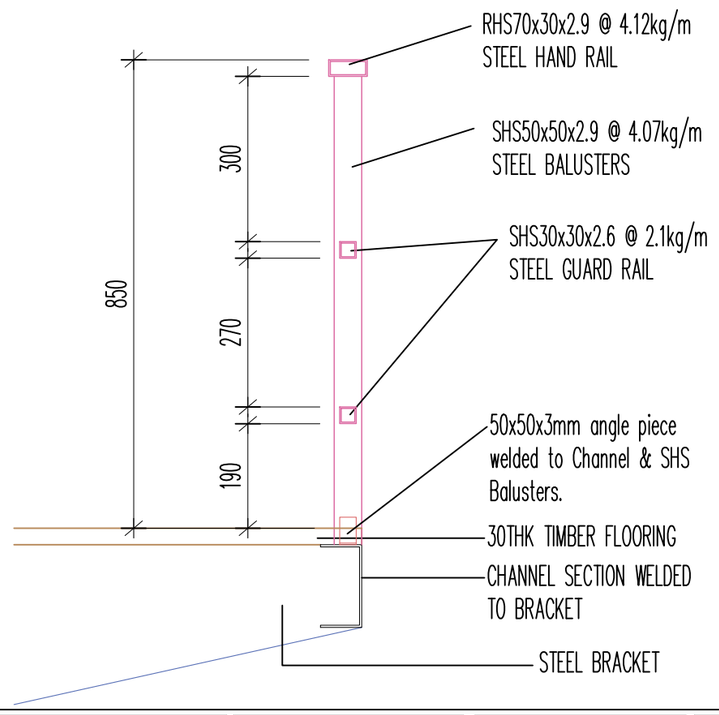

Khorlochhu

ARCHITECTURAL DRAWING

PROJECT TITLE	DRAWING TITLE
Construction of Doksum Primary School	RAILING_DETAILS

NOTES

1. ALL DIMENSIONS ARE IN MILLIMETER & ELEVATION IN METER UNLESS SPECIFIED OTHERWISE.
2. ALL DIMENSIONS MEASURE UNFINISHED SURFACES UNLESS SPECIFIED OTHERWISE.
3. DIMENSIONS ARE TO BE READ AND NOT SCALED OFF.
4. ANY DISCREPANCIES IN THE DRAWING ARE TO BE BROUGHT TO THE IMMEDIATE NOTICE OF THE SUPERVISION TEAM.

CHECKED	APPROVED	DATE	DRAWING NO.
			AR_38
		MARCH, 2026	SCALE
			NTS

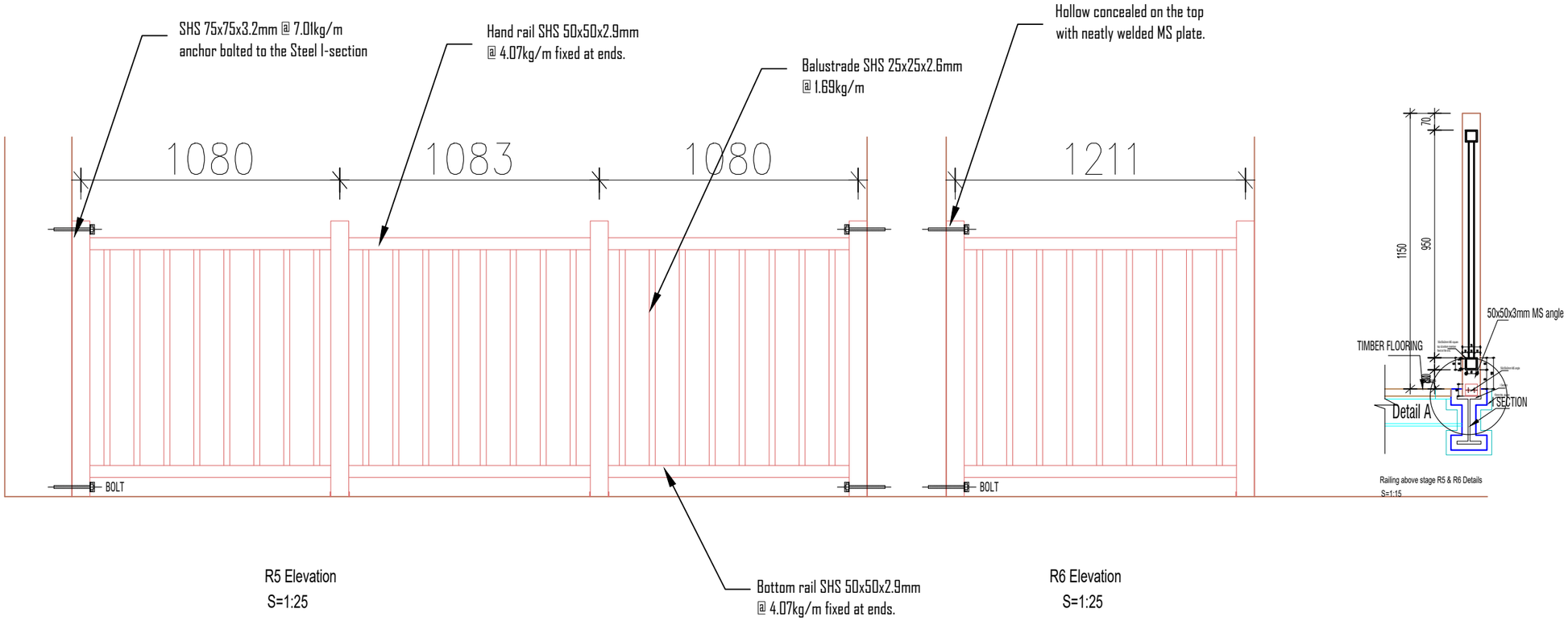

R5 Elevation
S=1:25

R6 Elevation
S=1:25

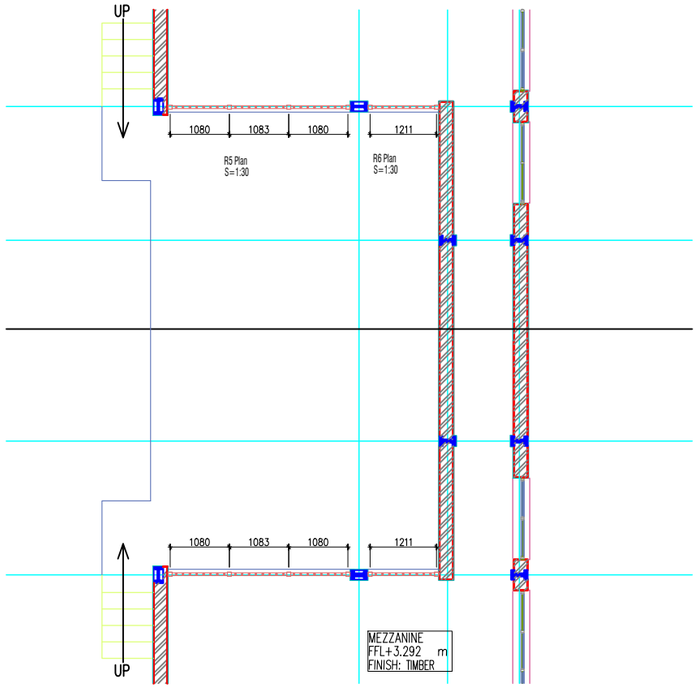

Khorlochhu

ARCHITECTURAL DRAWING

PROJECT TITLE	DRAWING TITLE
Construction of Doksum Primary School	RAILING_DETAILS

NOTES

1. ALL DIMENSIONS ARE IN MILLIMETER & ELEVATION IN METER UNLESS SPECIFIED OTHERWISE.
2. ALL DIMENSIONS MEASURE UNFINISHED SURFACES UNLESS SPECIFIED OTHERWISE.
3. DIMENSIONS ARE TO BE READ AND NOT SCALED OFF.
4. ANY DISCREPANCIES IN THE DRAWING ARE TO BE BROUGHT TO THE IMMEDIATE NOTICE OF THE SUPERVISION TEAM.

CHECKED	APPROVED	DATE	DRAWING NO.
			AR_39
		MARCH, 2026	SCALE
			NTS

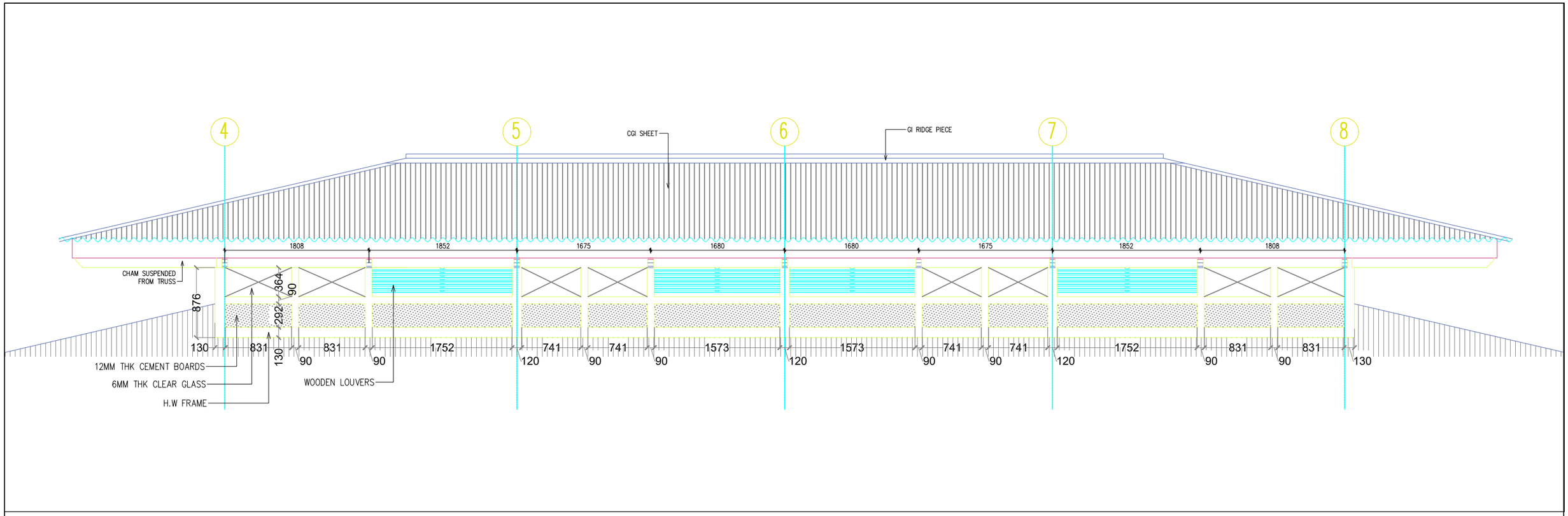

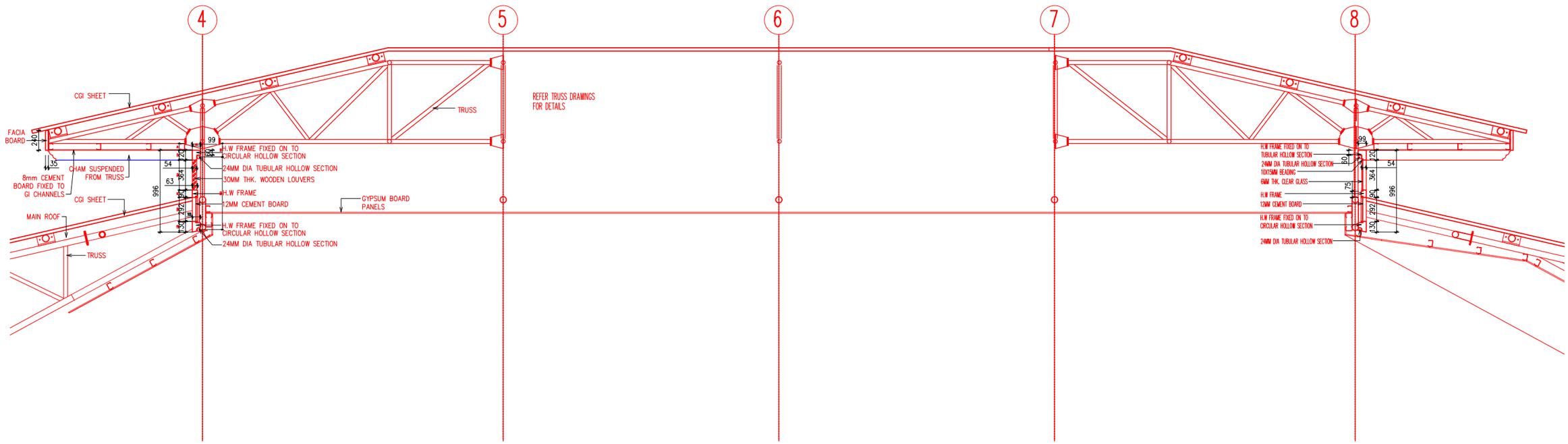

Khorlochhu

ARCHITECTURAL DRAWING

PROJECT TITLE	DRAWING TITLE
Construction of Doksum Primary School	JAMTHO_DETAILS

NOTES

1. ALL DIMENSIONS ARE IN MILLIMETER & ELEVATION IN METER UNLESS SPECIFIED OTHERWISE.
2. ALL DIMENSIONS MEASURE UNFINISHED SURFACES UNLESS SPECIFIED OTHERWISE.
3. DIMENSIONS ARE TO BE READ AND NOT SCALED OFF.
4. ANY DISCREPANCIES IN THE DRAWING ARE TO BE BROUGHT TO THE IMMEDIATE NOTICE OF THE SUPERVISION TEAM.

CHECKED	APPROVED	DATE	DRAWING NO.
			AR_40
		MARCH, 2026	SCALE
			NTS

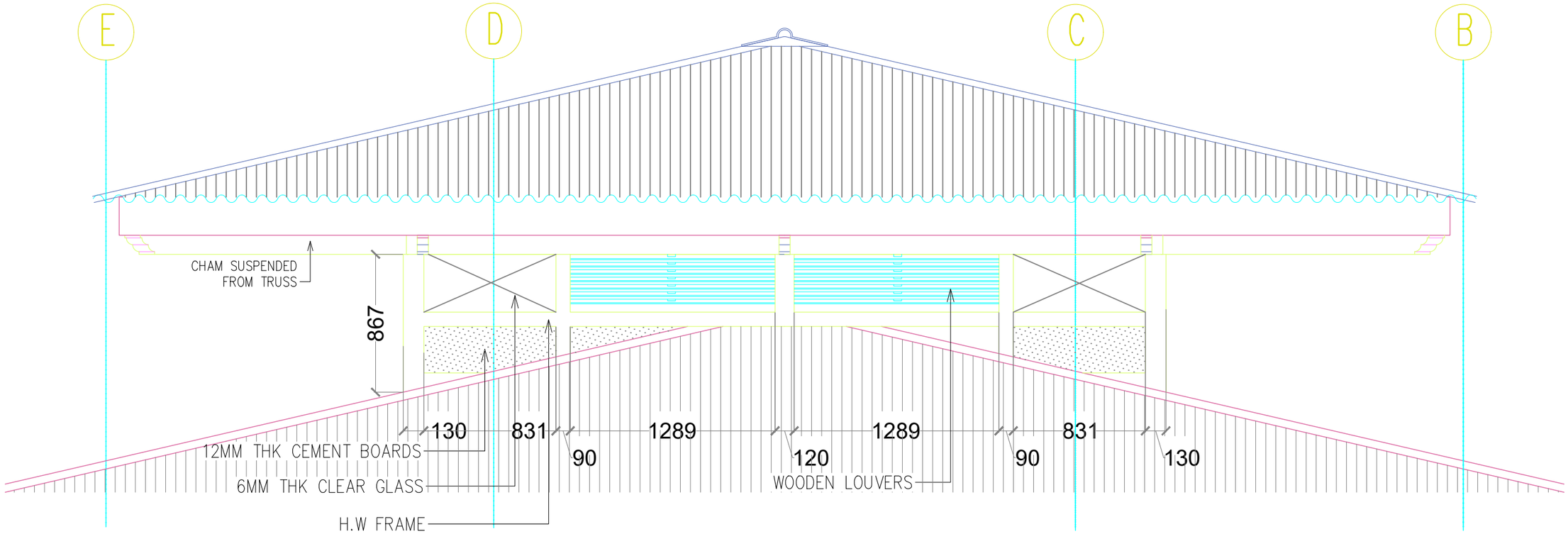

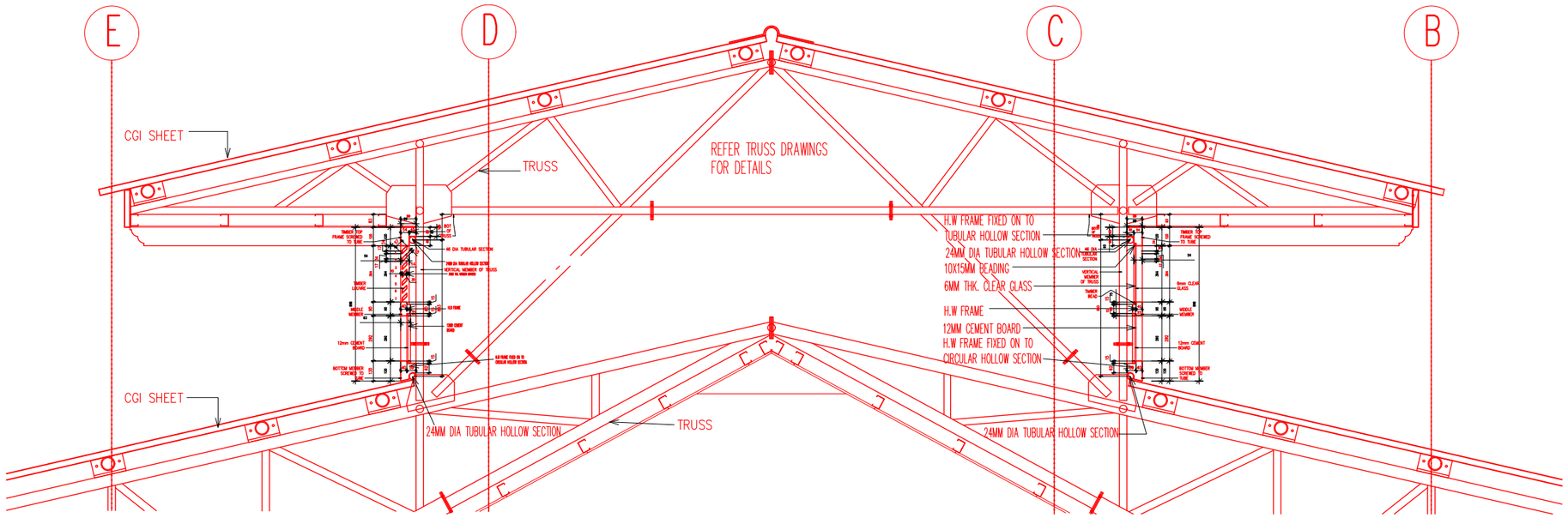

Khorlochhu

ARCHITECTURAL DRAWING

PROJECT TITLE	DRAWING TITLE
Construction of Doksum Primary School	JAMTHO_DETAILS

NOTES

1. ALL DIMENSIONS ARE IN MILLIMETER & ELEVATION IN METER UNLESS SPECIFIED OTHERWISE.
2. ALL DIMENSIONS MEASURE UNFINISHED SURFACES UNLESS SPECIFIED OTHERWISE.
3. DIMENSIONS ARE TO BE READ AND NOT SCALED OFF.
4. ANY DISCREPANCIES IN THE DRAWING ARE TO BE BROUGHT TO THE IMMEDIATE NOTICE OF THE SUPERVISION TEAM.

CHECKED	APPROVED	DATE	DRAWING NO.
			AR_41
		MARCH, 2026	SCALE
			NTS

STRUCTURAL DRAWINGS

MULTI PURPOSE HALL

Owner - Khorlochhu Hydro Power Limited
Location - Doksum New Township, Trashiyangtse

Khorlochhu

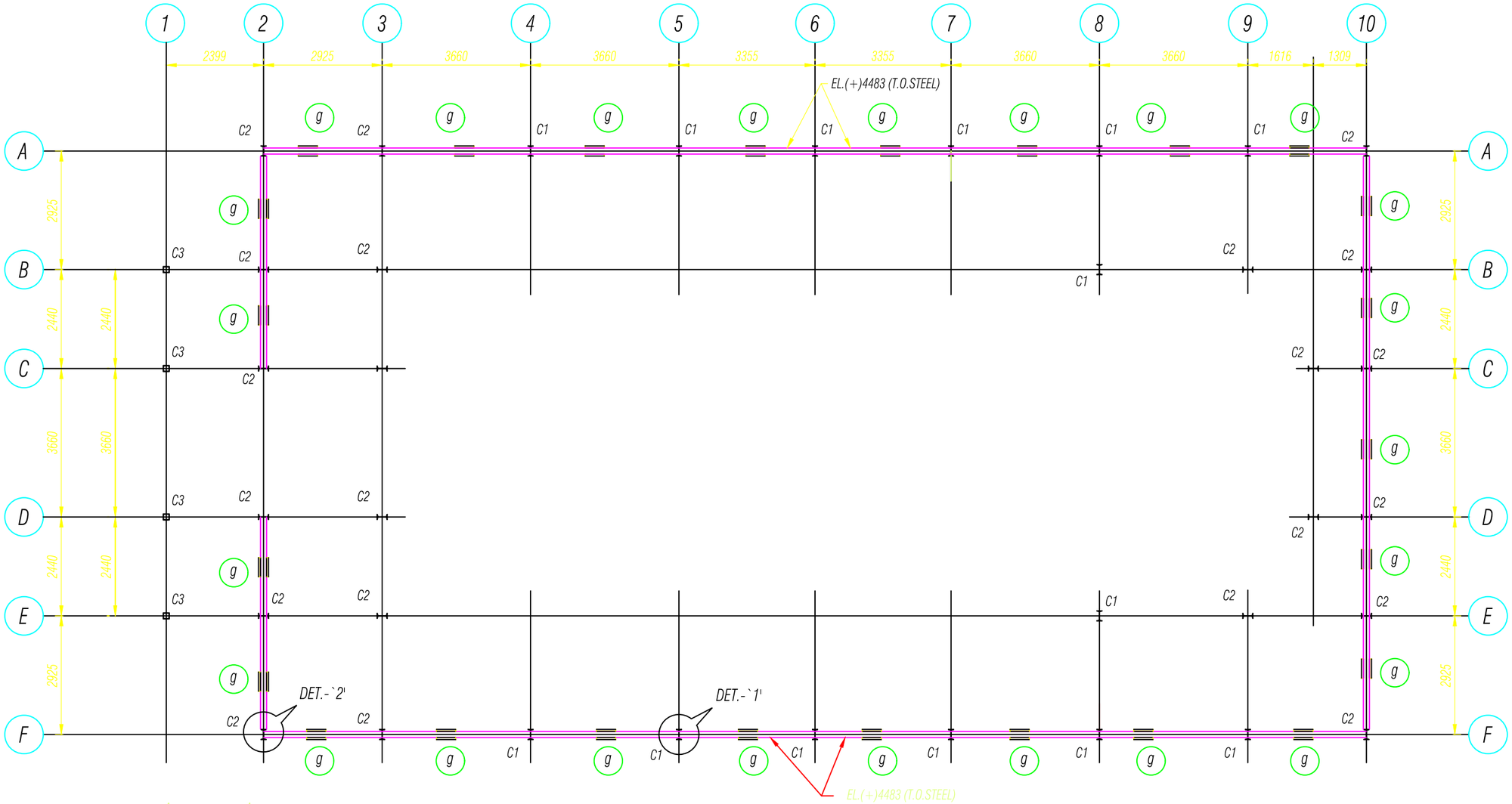

PLAN AT LINTEL LEVEL EL.(+)3460 (T.O.STEEL)

(UNLESS NOTED OTHERWISE)

(SCALE 1:100)

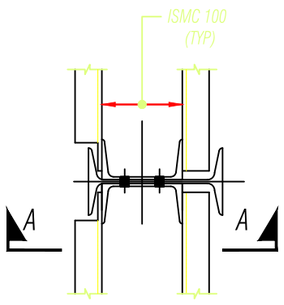

DETAIL-`1'

(SCALE 1:10)

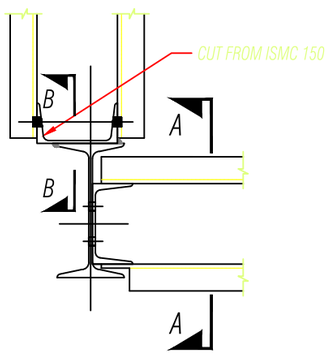

DETAIL-`2'

(SCALE 1:10)

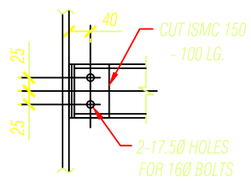

VIEW B-B

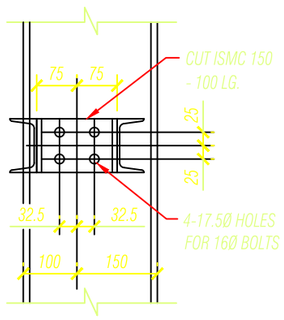

VIEW A-A

Khorlochhu

STRUCTURAL DRAWING

PROJECT TITLE	DRAWING TITLE
Construction of Doksum Primary School	PLINTH_AT_LINTEL_LEVEL

NOTES

1. ALL DIMENSIONS ARE IN MILLIMETER & ELEVATION IN METER UNLESS SPECIFIED OTHERWISE.
2. ALL DIMENSIONS MEASURE UNFINISHED SURFACES UNLESS SPECIFIED OTHERWISE.
3. DIMENSIONS ARE TO BE READ AND NOT SCALED OFF.
4. ANY DISCREPANCIES IN THE DRAWING ARE TO BE BROUGHT TO THE IMMEDIATE NOTICE OF THE SUPERVISION TEAM.

CHECKED	APPROVED	DATE	DRAWING NO.
			STR_1
		MARCH, 2026	SCALE
			NTS

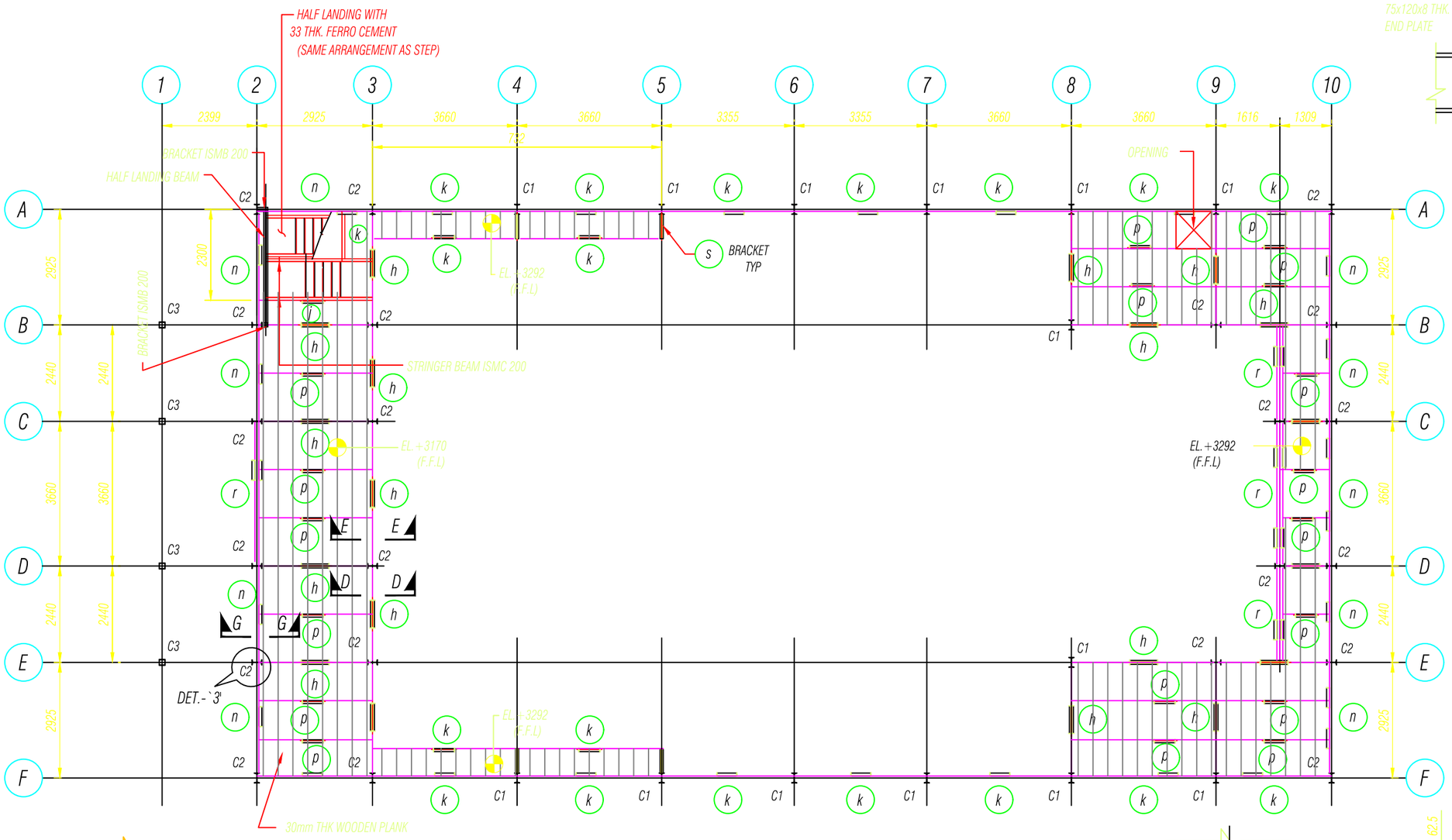

MEZZANINE FLOOR PLAN TOP EL.(+)3170/EL.(+)3292

(SCALE 1:100)

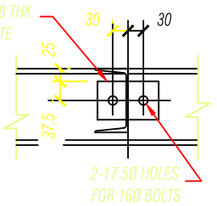

VIEW H-H

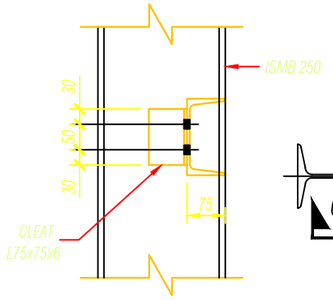

VIEW C-C

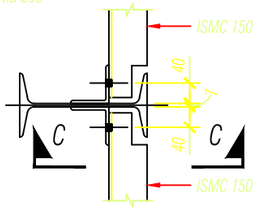

DETAIL-`3'

(SCALE 1:10)

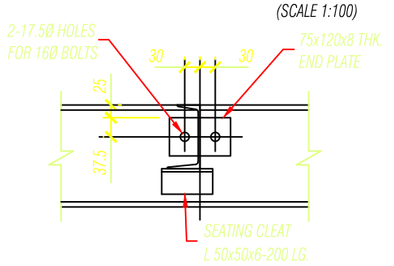

VIEW F-F

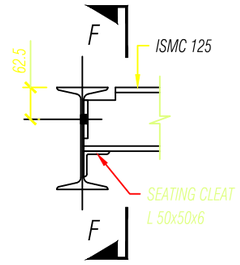

VIEW E-E

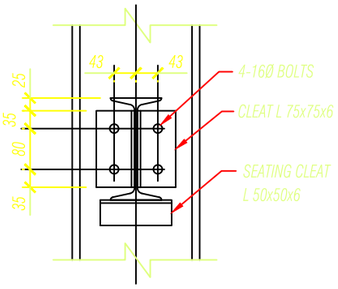

VIEW D-D

(TYP BEAM COL. CONNECTION
AT MEZZANINE FLOOR)

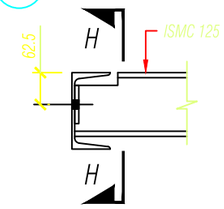

VIEW G-G

Khorlochhu

STRUCTURAL DRAWING

PROJECT TITLE	DRAWING TITLE
Construction of Doksum Primary School	MEZZANINE_FLOORING_PLAN

NOTES

1. ALL DIMENSIONS ARE IN MILLIMETER & ELEVATION IN METER UNLESS SPECIFIED OTHERWISE.
2. ALL DIMENSIONS MEASURE UNFINISHED SURFACES UNLESS SPECIFIED OTHERWISE.
3. DIMENSIONS ARE TO BE READ AND NOT SCALED OFF.
4. ANY DISCREPANCIES IN THE DRAWING ARE TO BE BROUGHT TO THE IMMEDIATE NOTICE OF THE SUPERVISION TEAM.

CHECKED	APPROVED	DATE	DRAWING NO.
			STR_02
		MARCH, 2026	SCALE
			NTS

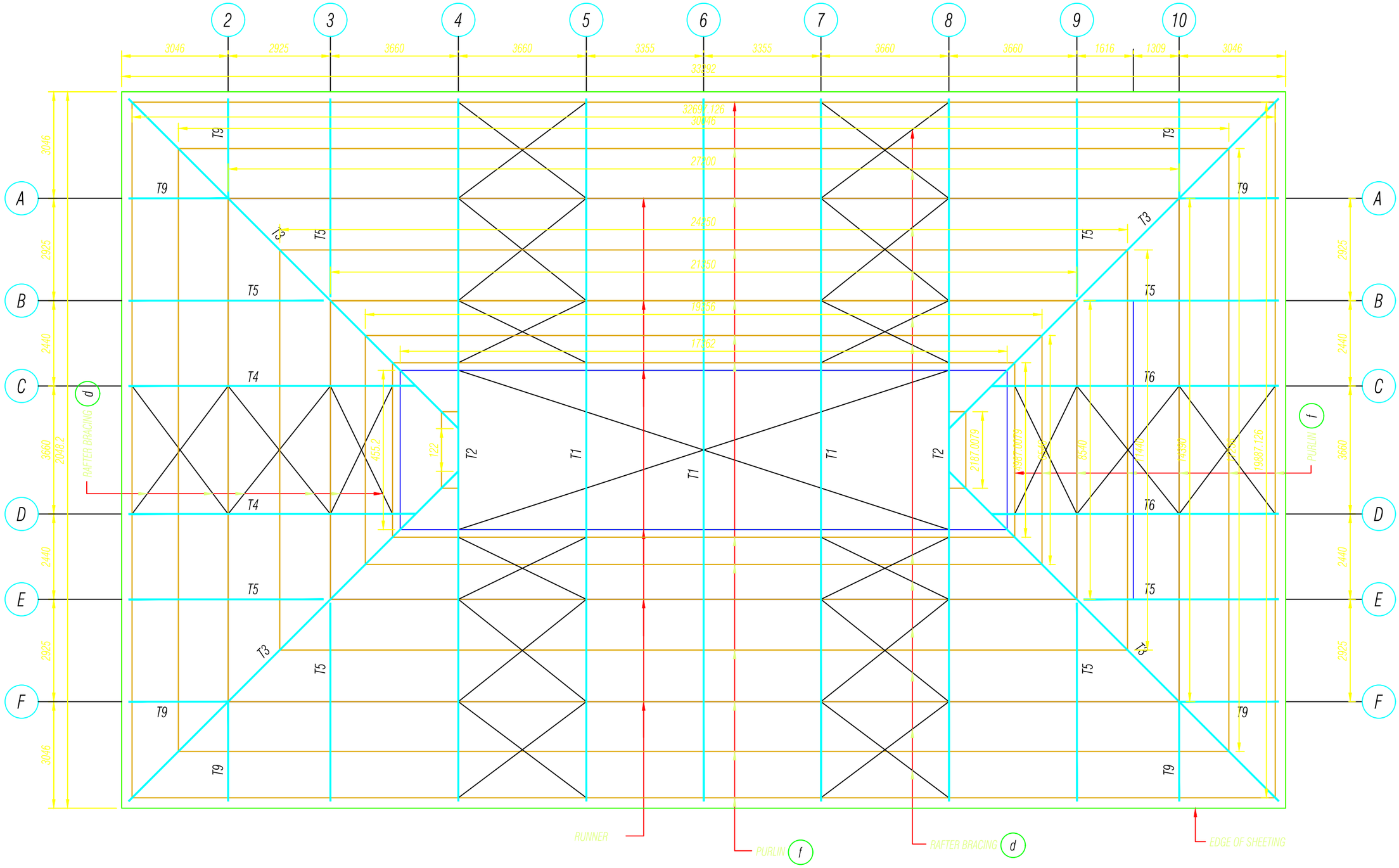

LOWER LEVEL ROOF PLAN

(SCALE 1:100)

Khorlochhu

STRUCTURAL DRAWING

PROJECT TITLE	DRAWING TITLE
Construction of Doksum Primary School	LOWER_LEVEL_FLOOR_PLAN

NOTES

1. ALL DIMENSIONS ARE IN MILLIMETER & ELEVATION IN METER UNLESS SPECIFIED OTHERWISE.
2. ALL DIMENSIONS MEASURE UNFINISHED SURFACES UNLESS SPECIFIED OTHERWISE.
3. DIMENSIONS ARE TO BE READ AND NOT SCALED OFF.
4. ANY DISCREPANCIES IN THE DRAWING ARE TO BE BROUGHT TO THE IMMEDIATE NOTICE OF THE SUPERVISION TEAM.

CHECKED	APPROVED	DATE	DRAWING NO.
			STR_03
		MARCH, 2026	SCALE
			NTS

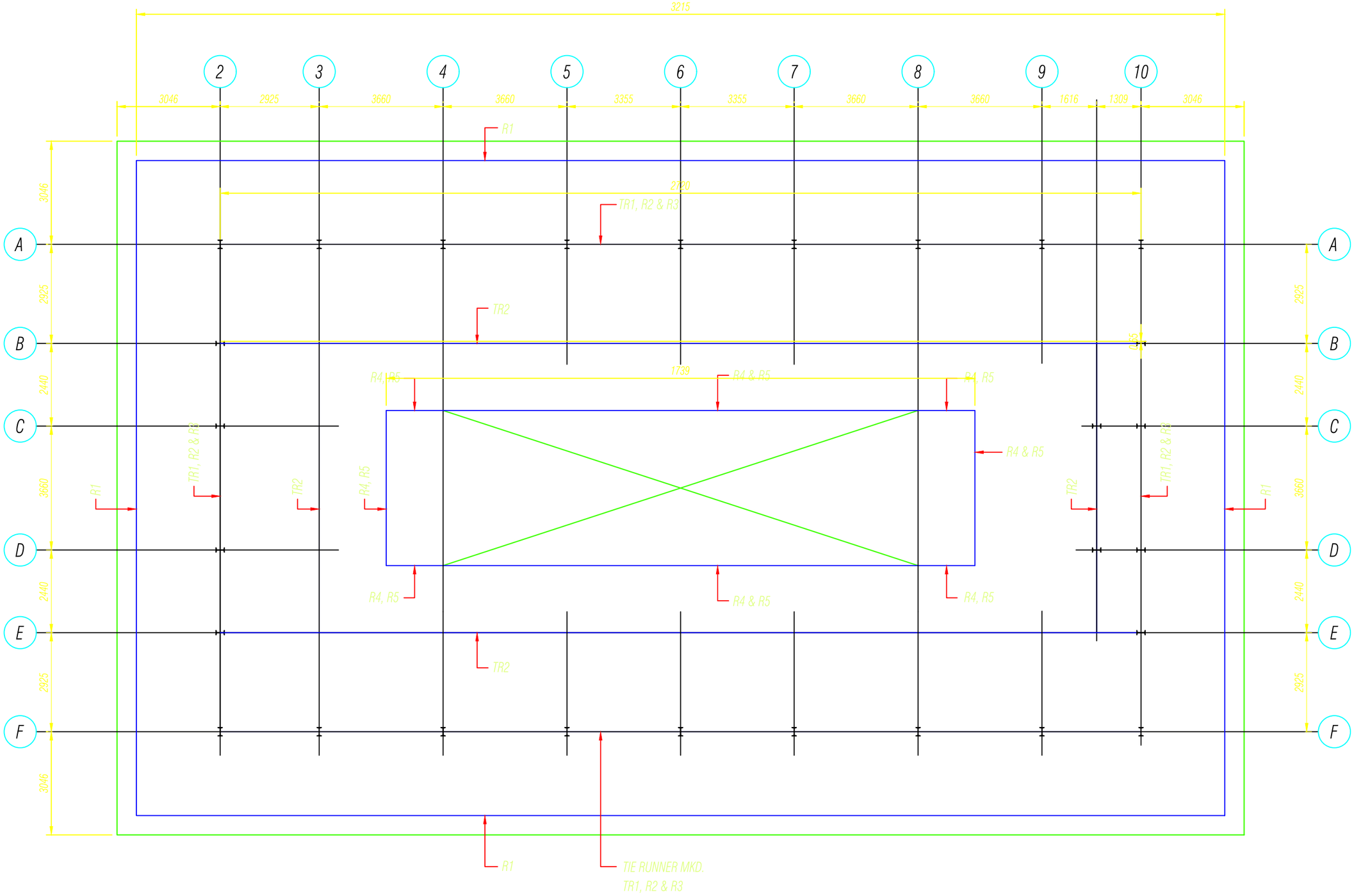

PLAN SHOWING POSITION OF RUNNERS

(SCALE 1:100)

Khorlochhu

STRUCTURAL DRAWING

PROJECT TITLE	DRAWING TITLE
Construction of Doksum Primary School	POSITION_OF_RUNNERS

NOTES

1. ALL DIMENSIONS ARE IN MILLIMETER & ELEVATION IN METER UNLESS SPECIFIED OTHERWISE.
2. ALL DIMENSIONS MEASURE UNFINISHED SURFACES UNLESS SPECIFIED OTHERWISE.
3. DIMENSIONS ARE TO BE READ AND NOT SCALED OFF.
4. ANY DISCREPANCIES IN THE DRAWING ARE TO BE BROUGHT TO THE IMMEDIATE NOTICE OF THE SUPERVISION TEAM.

CHECKED	APPROVED	DATE	DRAWING NO.
			STR_04
		MARCH, 2026	SCALE
			NTS

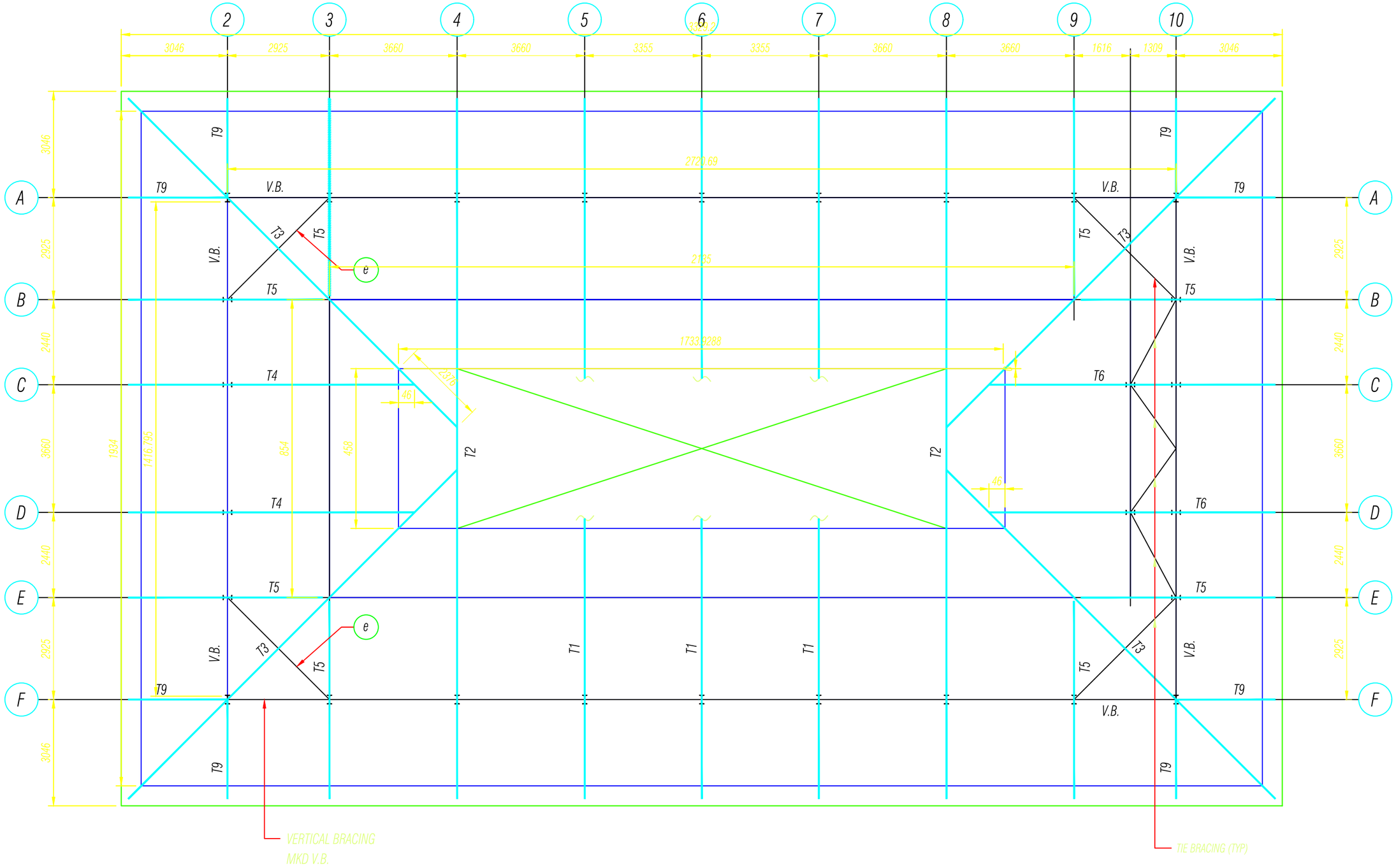

PLAN AT BOTTOM CHORD LEVEL OF LOWER ROOF

(SCALE 1:100)

Khorlochhu

STRUCTURAL DRAWING

PROJECT TITLE	DRAWING TITLE
Construction of Doksum Primary School	PLAN_AT_BOTTOM_CHORD_LEVEL

NOTES

1. ALL DIMENSIONS ARE IN MILLIMETER & ELEVATION IN METER UNLESS SPECIFIED OTHERWISE.
2. ALL DIMENSIONS MEASURE UNFINISHED SURFACES UNLESS SPECIFIED OTHERWISE.
3. DIMENSIONS ARE TO BE READ AND NOT SCALED OFF.
4. ANY DISCREPANCIES IN THE DRAWING ARE TO BE BROUGHT TO THE IMMEDIATE NOTICE OF THE SUPERVISION TEAM.

CHECKED	APPROVED	DATE	DRAWING NO.
			STR_05
		MARCH, 2026	SCALE
			NTS

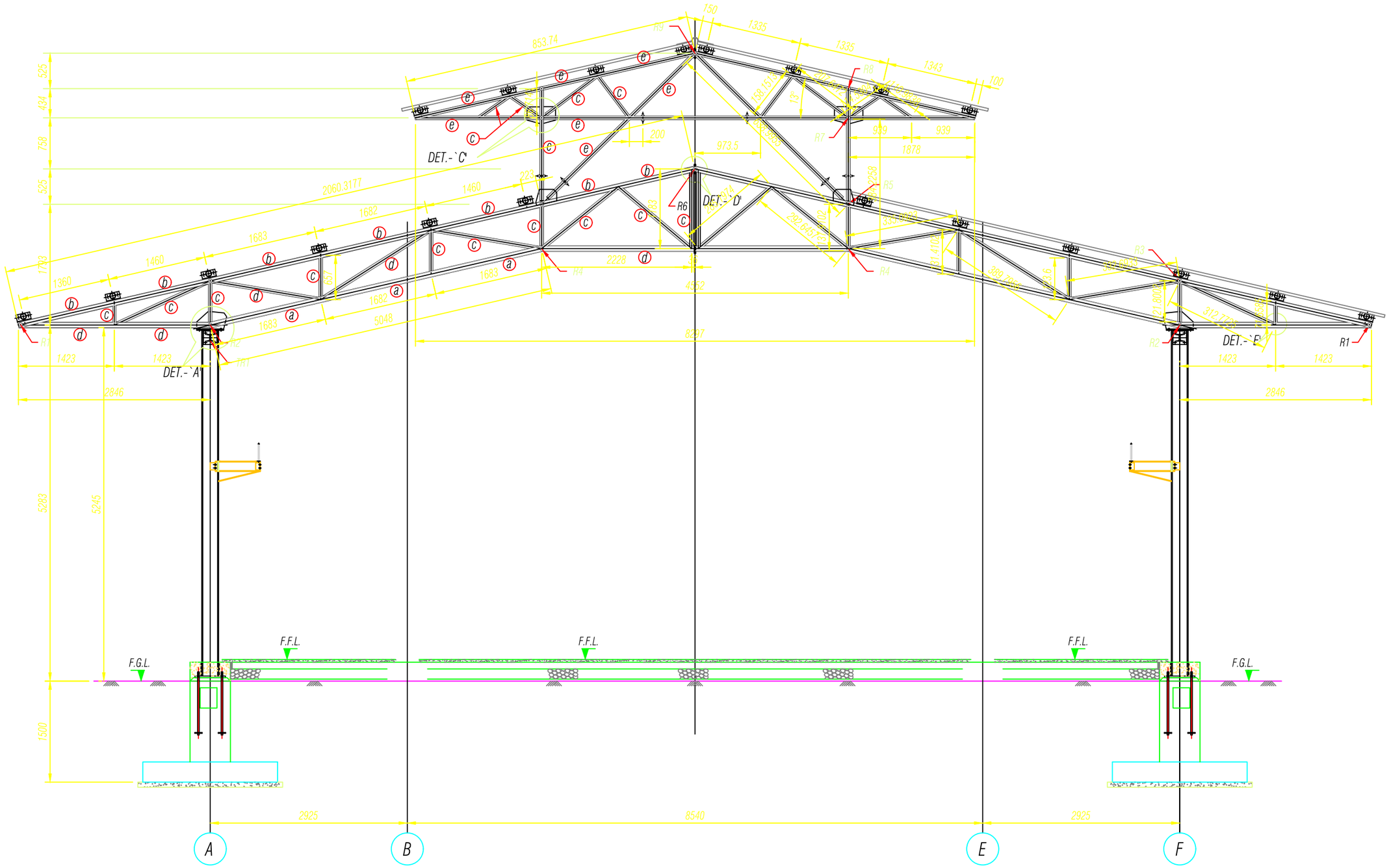

GENERAL CROSS SECTION AT GRID `5', `6' & `7'

(SHOWING DET. OF TRUSS MKD. T1)

(SCALE 1:50)

Khorlochhu

STRUCTURAL DRAWING

PROJECT TITLE	DRAWING TITLE
Construction of Doksum Primary School	GENERAL_CROSS_SECTION

NOTES

1. ALL DIMENSIONS ARE IN MILLIMETER & ELEVATION IN METER UNLESS SPECIFIED OTHERWISE.
2. ALL DIMENSIONS MEASURE UNFINISHED SURFACES UNLESS SPECIFIED OTHERWISE.
3. DIMENSIONS ARE TO BE READ AND NOT SCALED OFF.
4. ANY DISCREPANCIES IN THE DRAWING ARE TO BE BROUGHT TO THE IMMEDIATE NOTICE OF THE SUPERVISION TEAM.

CHECKED	APPROVED	DATE	DRAWING NO.
			STR_06
		MARCH, 2026	SCALE
			NTS

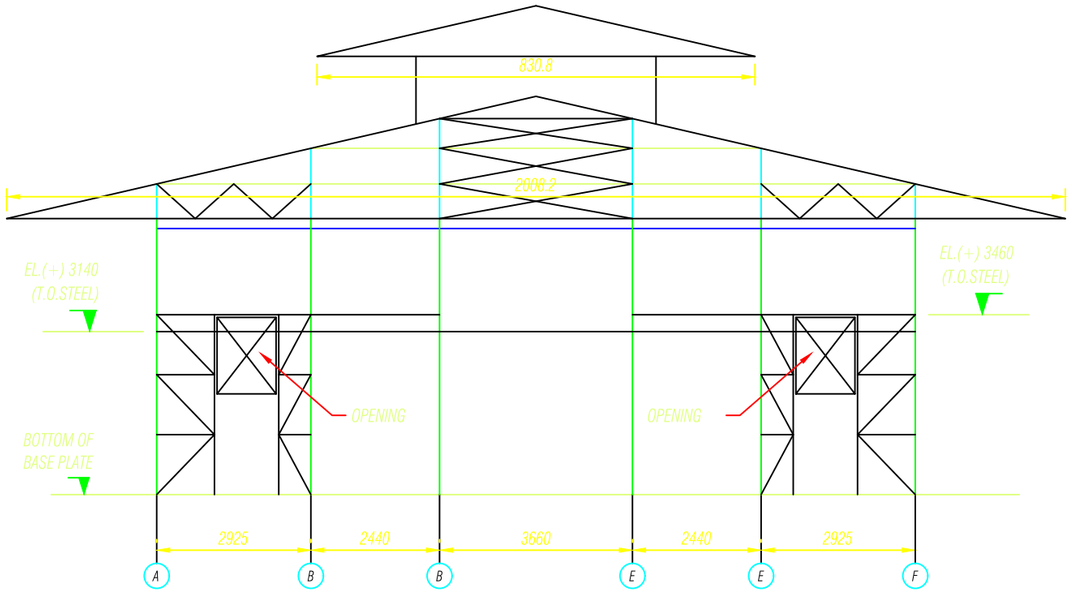

FRONT ELEVATION SHOWING VERTICAL COLUMN BRACING AND RAFTER BRACING AT GRID `2'

SIZE OF ALL BRACING MEMBERS : 2-L50x50x6

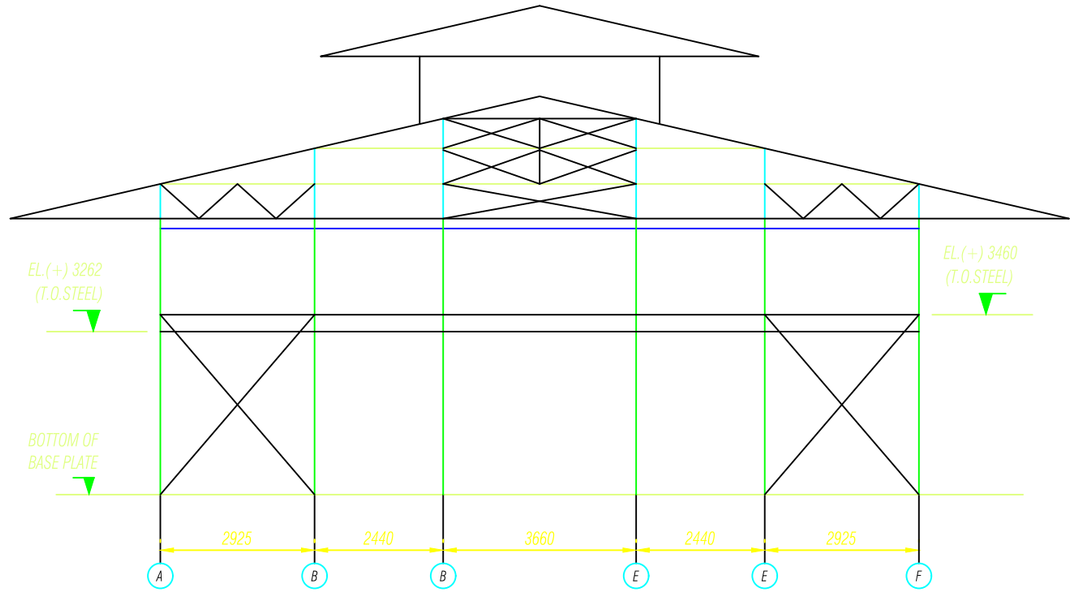

REAR ELEVATION SHOWING VERTICAL COLUMN BRACING AND RAFTER BRACING AT GRID `10'

SIZE OF ALL BRACING MEMBERS : 2-L50x50x6

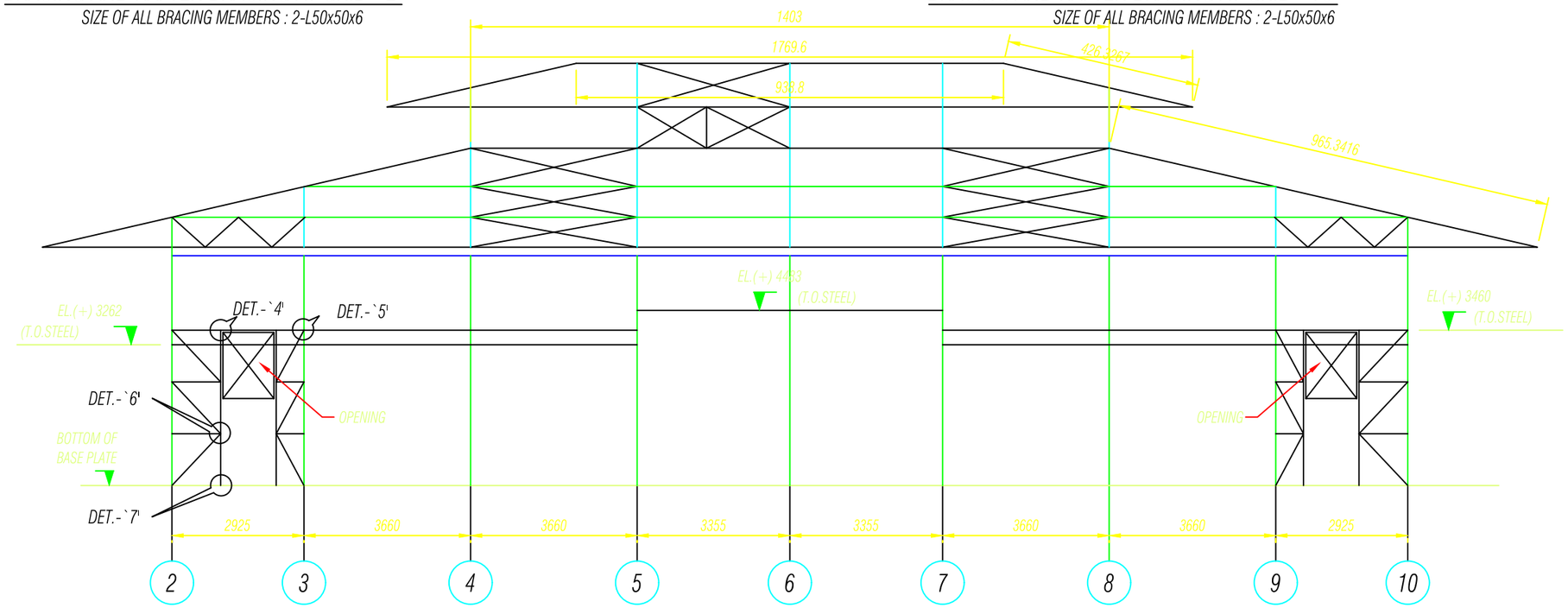

LONG ELEVATION SHOWING VERTICAL COLUMN BRACING & RAFTER BRACING

SIZE OF ALL BRACING MEMBERS : 2-L50x50x6

Khorlochhu

STRUCTURAL DRAWING

PROJECT TITLE	DRAWING TITLE
Construction of Doksum Primary School	COLUMN_&_RAFTER_BRACING

NOTES

1. ALL DIMENSIONS ARE IN MILLIMETER & ELEVATION IN METER UNLESS SPECIFIED OTHERWISE.
2. ALL DIMENSIONS MEASURE UNFINISHED SURFACES UNLESS SPECIFIED OTHERWISE.
3. DIMENSIONS ARE TO BE READ AND NOT SCALED OFF.
4. ANY DISCREPANCIES IN THE DRAWING ARE TO BE BROUGHT TO THE IMMEDIATE NOTICE OF THE SUPERVISION TEAM.

CHECKED	APPROVED	DATE	DRAWING NO.
			STR_08
		MARCH, 2026	SCALE
			NTS

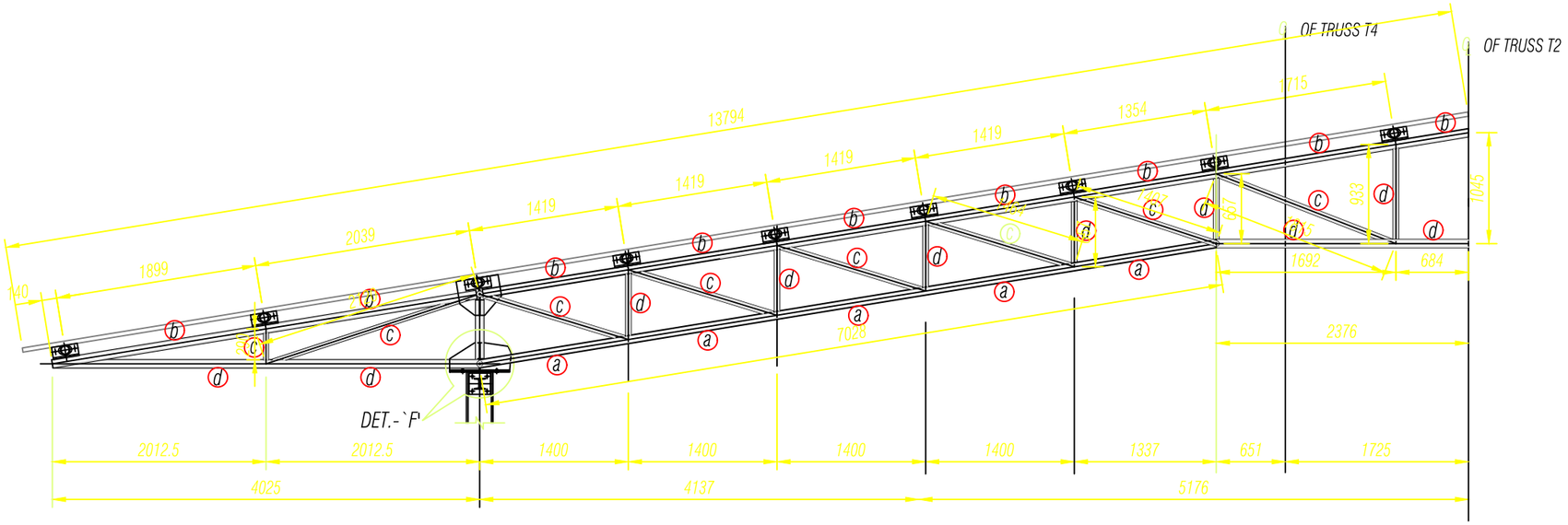

DET. OF TRUSS MKD. T3

(SCALE 1:50)

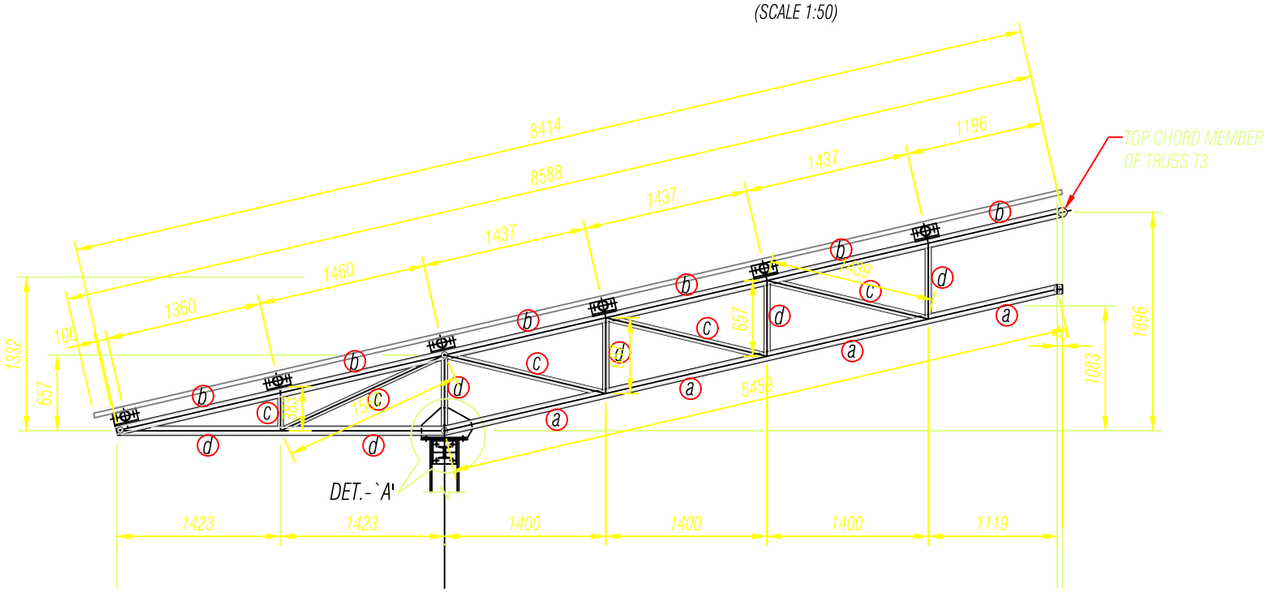

DET. OF TRUSS MKD. T4

(SCALE 1:50)

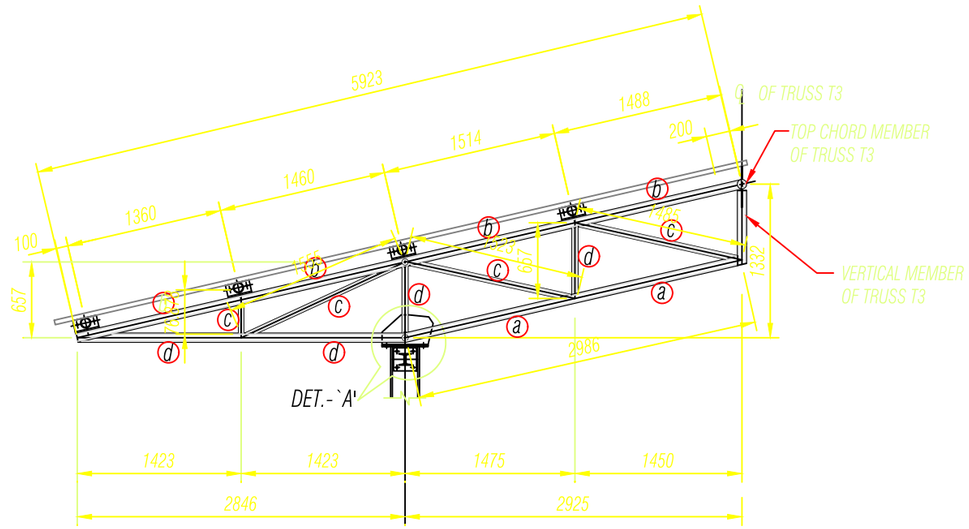

DET. OF TRUSS MKD. T5

(SCALE 1:50)

Khorlochhu

STRUCTURAL DRAWING

PROJECT TITLE	DRAWING TITLE
Construction of Doksum Primary School	TRUSS_DETAILS

NOTES

1. ALL DIMENSIONS ARE IN MILLIMETER & ELEVATION IN METER UNLESS SPECIFIED OTHERWISE.
2. ALL DIMENSIONS MEASURE UNFINISHED SURFACES UNLESS SPECIFIED OTHERWISE.
3. DIMENSIONS ARE TO BE READ AND NOT SCALED OFF.
4. ANY DISCREPANCIES IN THE DRAWING ARE TO BE BROUGHT TO THE IMMEDIATE NOTICE OF THE SUPERVISION TEAM.

CHECKED	APPROVED	DATE	DRAWING NO.
			STR_08
		MARCH, 2026	SCALE
			NTS

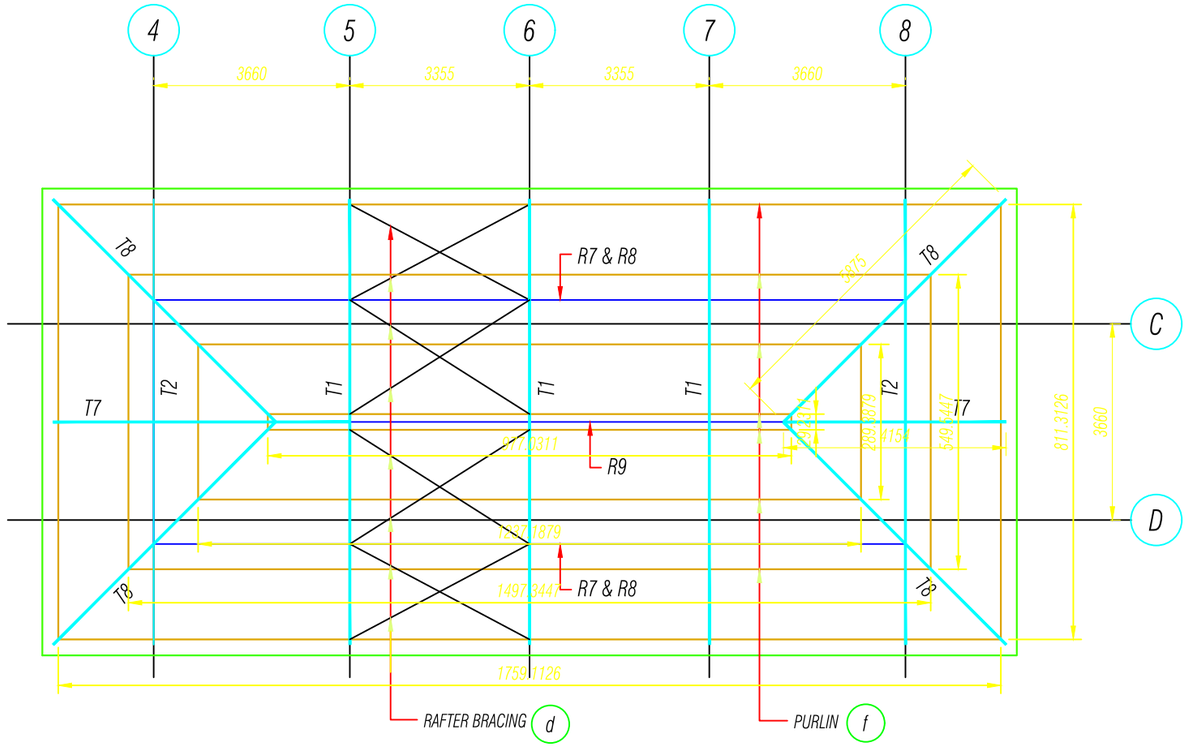

UPPER LEVEL ROOF PLAN
(SCALE 1:100)

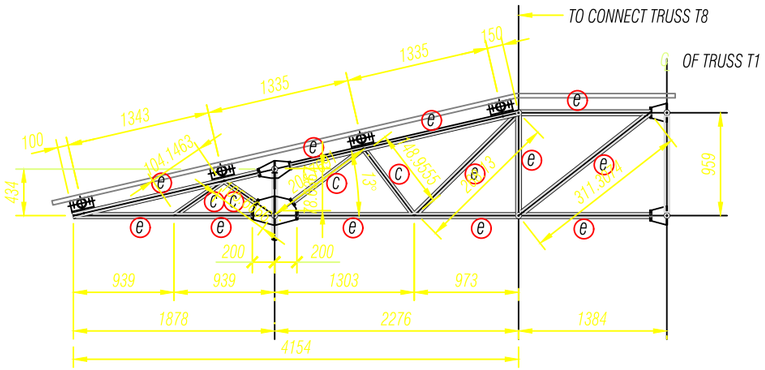

DET. OF TRUSS MKD. T7
(SCALE 1:50)

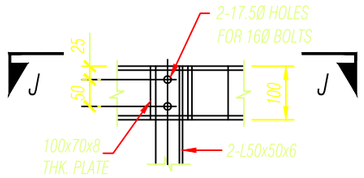

DETAIL-`4'
(SCALE 1:10)

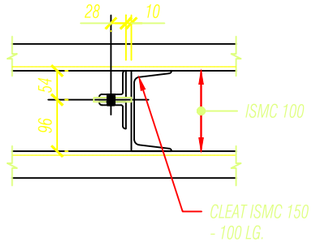

VIEW J-J

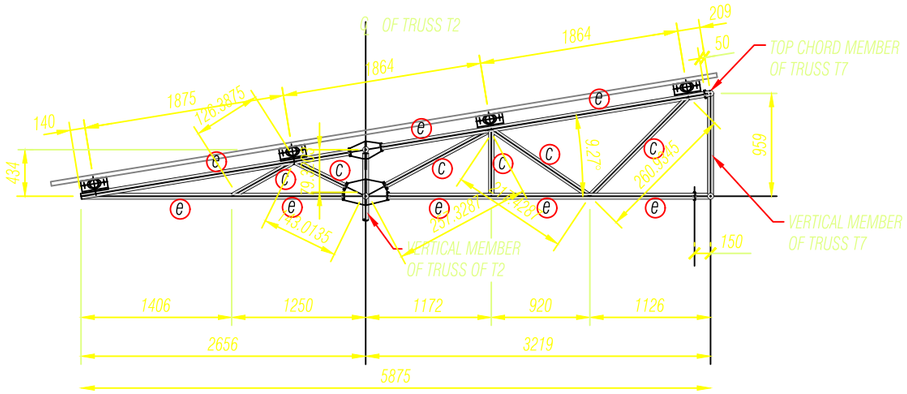

DET. OF TRUSS MKD. T8
(SCALE 1:50)

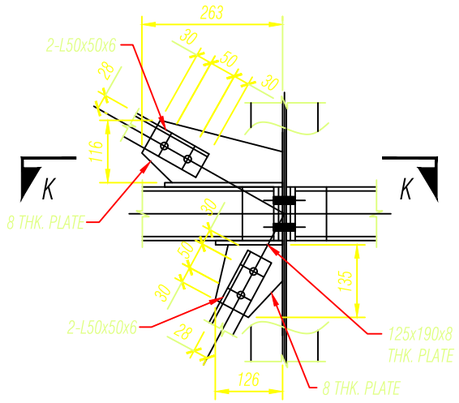

DETAIL-`5'
(SCALE 1:10)

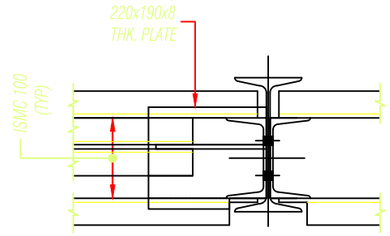

VIEW K-K

Khorlochhu

STRUCTURAL DRAWING

PROJECT TITLE	DRAWING TITLE
Construction of Doksum Primary School	TRUSS_DETAILS

NOTES

1. ALL DIMENSIONS ARE IN MILLIMETER & ELEVATION IN METER UNLESS SPECIFIED OTHERWISE.
2. ALL DIMENSIONS MEASURE UNFINISHED SURFACES UNLESS SPECIFIED OTHERWISE.
3. DIMENSIONS ARE TO BE READ AND NOT SCALED OFF.
4. ANY DISCREPANCIES IN THE DRAWING ARE TO BE BROUGHT TO THE IMMEDIATE NOTICE OF THE SUPERVISION TEAM.

CHECKED	APPROVED	DATE	DRAWING NO.
			STR_09
		MARCH, 2026	SCALE
			NTS

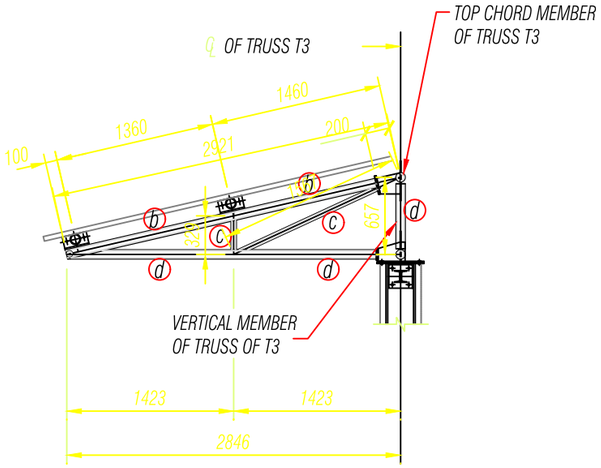

DET. OF TRUSS MKD. T9

(SCALE 1:50)

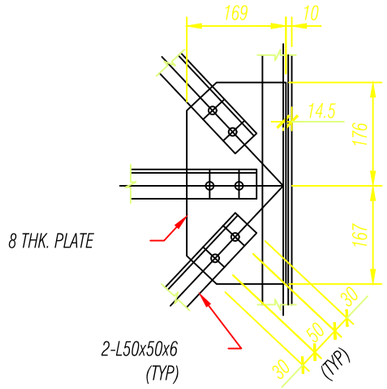

DETAIL-`6'

(SCALE 1:10)

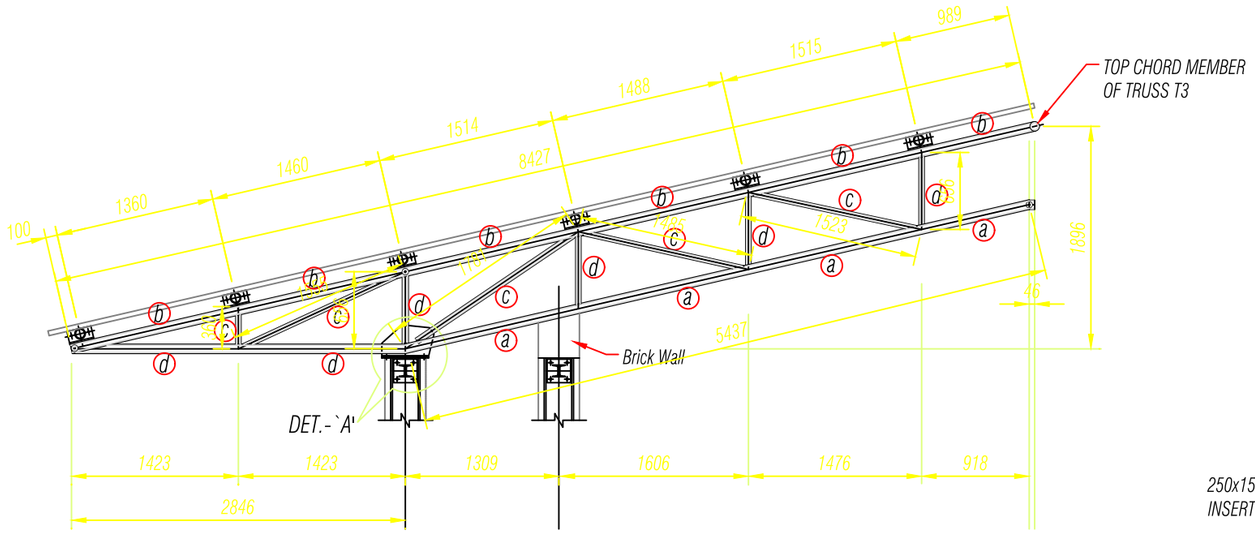

DET. OF TRUSS MKD. T6

(SCALE 1:50)

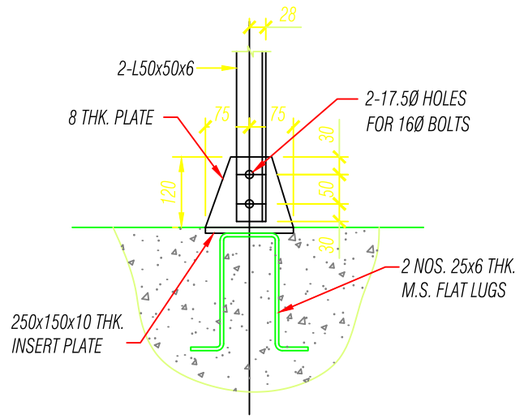

DETAIL-`7'

(SCALE 1:10)

LEGEND OF SECTIONS

MKD.	SECTION	
a	NB 80 (L)	O.D = 88.9 TH. = 3.25
b	NB 65 (L)	O.D = 76.1 TH. = 3.25
c	NB 32 (M)	O.D = 42.4 TH. = 3.25
d	NB 50(L2)	O.D = 60.3 TH. = 3.25
e	NB 40 (M)	O.D = 48.3 TH. = 3.25
f	NB 65 (L)	O.D = 76.1 TH. = 3.25
g	2 ISMC 100 - 150 b/b LINTEL BEAM ENCASED WITH CONC.	
h	ISMB 200 (200x100)	
j	ISMC 200 (200x75)	
k	ISMC 150 (150x75)	
n	ISMC 150 (150x75)	
p	ISMC 125 (125x65)	
q	NB 100 (L)	O.D = 114.3 TH. = 3.65
r	2 ISMC 150 - 100 b/b LINTEL BEAM ENCASED WITH CONC.	
R1 to R9	NB 40 (M)	O.D = 48.3 TH. = 3.25
TR1 TR2	2 ISMC 100 - 8 b/b WITH 75x120x8 mm THK. PACK PLATE @ 500 c/c	
s	ISMB 150 + CUT FROM ISMB 150	

Khorlochhu

STRUCTURAL DRAWING

PROJECT TITLE	DRAWING TITLE
Construction of Doksum Primary School	TRUSS_DETAILS

NOTES

1. ALL DIMENSIONS ARE IN MILLIMETER & ELEVATION IN METER UNLESS SPECIFIED OTHERWISE.
2. ALL DIMENSIONS MEASURE UNFINISHED SURFACES UNLESS SPECIFIED OTHERWISE.
3. DIMENSIONS ARE TO BE READ AND NOT SCALED OFF.
4. ANY DISCREPANCIES IN THE DRAWING ARE TO BE BROUGHT TO THE IMMEDIATE NOTICE OF THE SUPERVISION TEAM.

CHECKED	APPROVED	DATE	DRAWING NO.
			STR_10
		MARCH, 2026	SCALE
			NTS

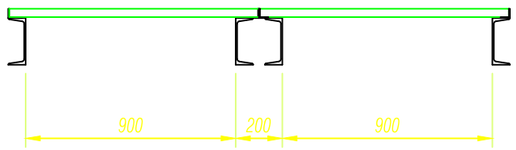

SECTION 2B-2B

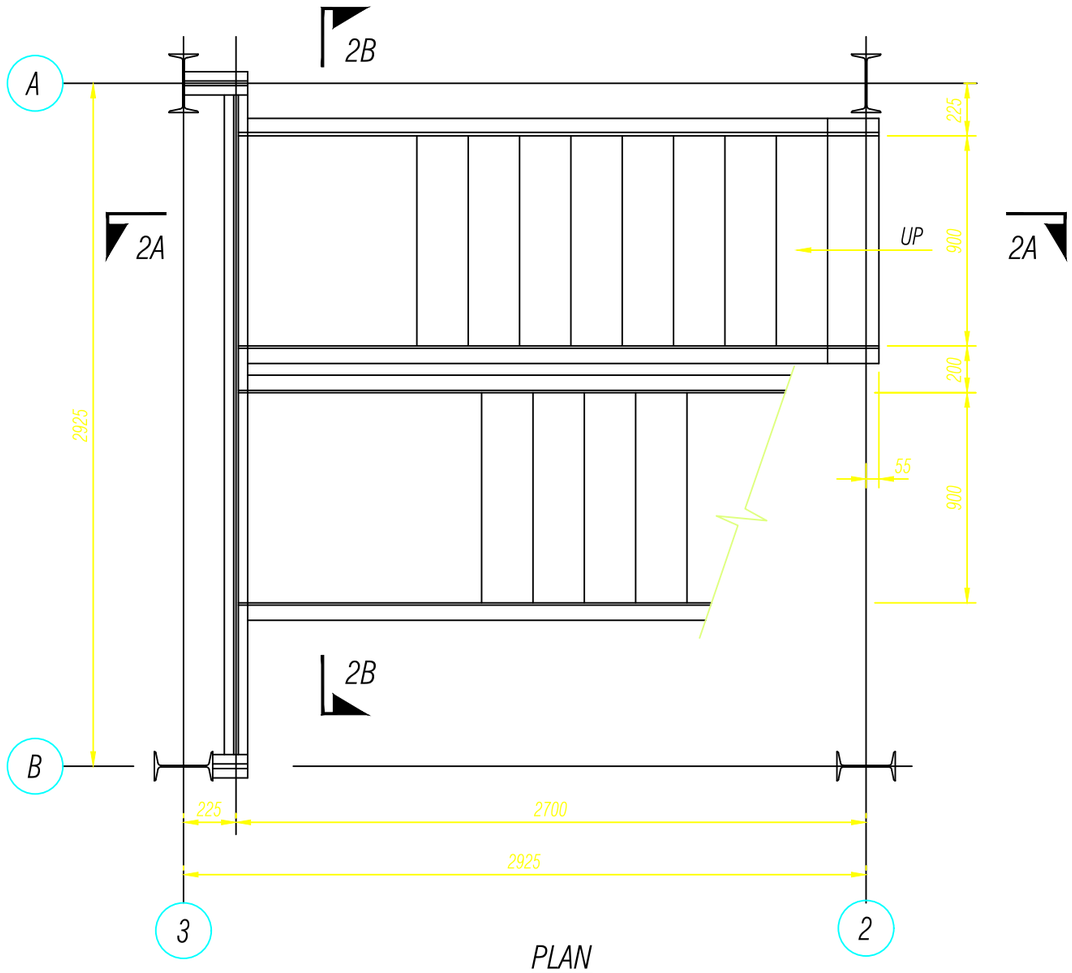

PLAN

(SHOWING STAIR CASE)

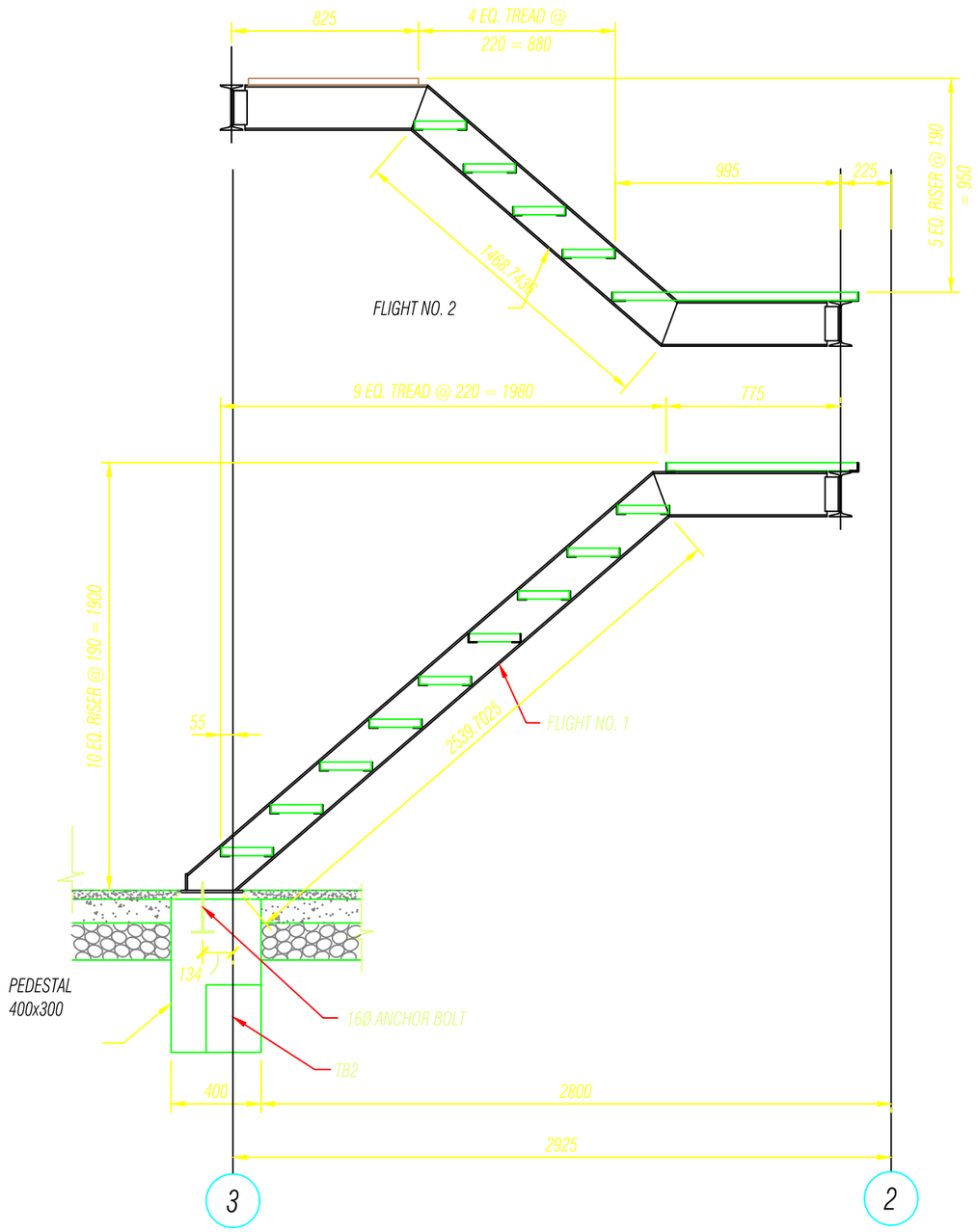

SECTION 2A-2A

(DETAIL OF FLIGHT NO. 1 & 2)

Khorlochhu

STRUCTURAL DRAWING

PROJECT TITLE	DRAWING TITLE
Construction of Doksum Primary School	STAIRCASE_DETAILS

NOTES

1. ALL DIMENSIONS ARE IN MILLIMETER & ELEVATION IN METER UNLESS SPECIFIED OTHERWISE.
2. ALL DIMENSIONS MEASURE UNFINISHED SURFACES UNLESS SPECIFIED OTHERWISE.
3. DIMENSIONS ARE TO BE READ AND NOT SCALED OFF.
4. ANY DISCREPANCIES IN THE DRAWING ARE TO BE BROUGHT TO THE IMMEDIATE NOTICE OF THE SUPERVISION TEAM.

CHECKED	APPROVED	DATE	DRAWING NO.
			STR_11
		MARCH, 2026	SCALE
			NTS

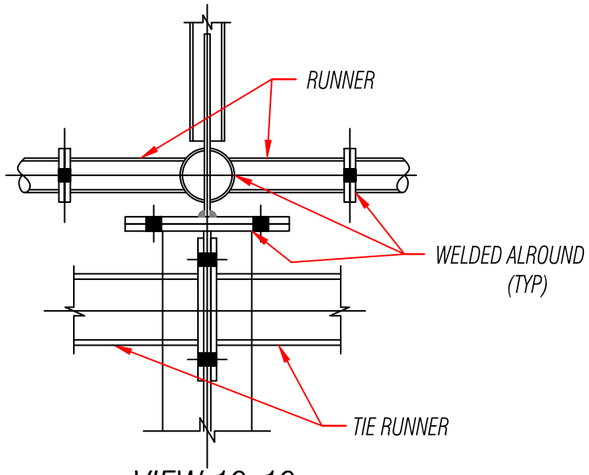

VIEW 19-19

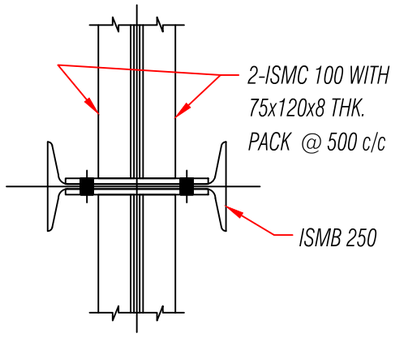

VIEW 18-18

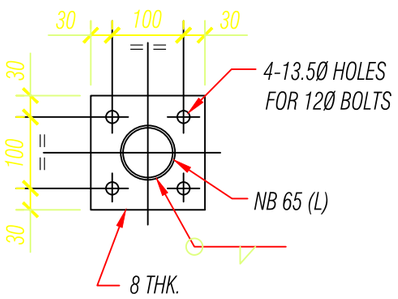

VIEW 23-23

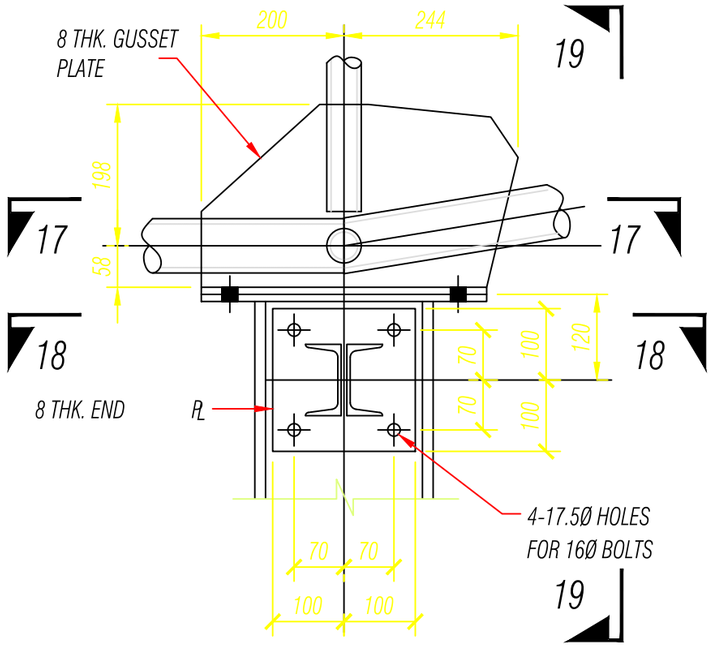

DETAIL-`A'

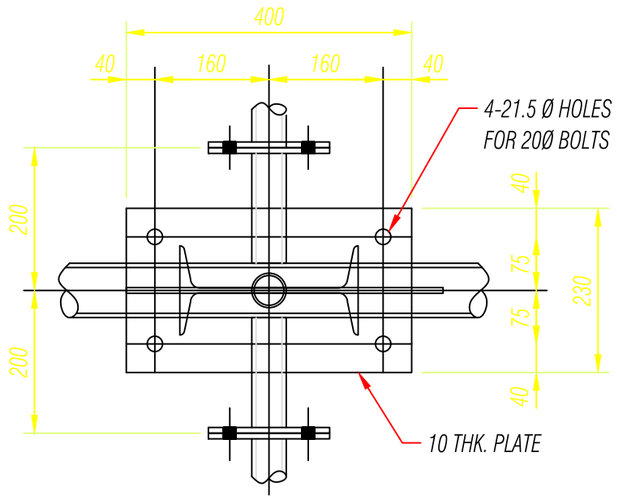

VIEW 17-17

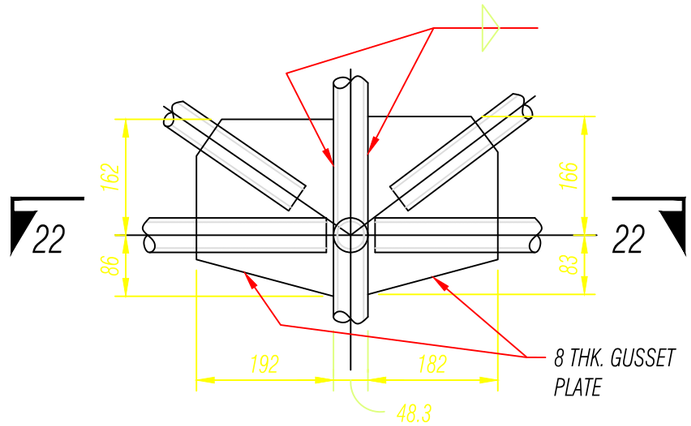

DETAIL-`C'

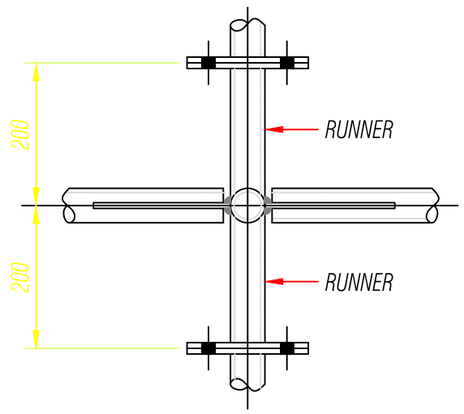

VIEW 22-22

Khorlochhu	STRUCTURAL DRAWING	NOTES	CHECKED	APPROVED	DATE	DRAWING NO.
	PROJECT TITLE	1. ALL DIMENSIONS ARE IN MILLIMETER & ELEVATION IN METER UNLESS SPECIFIED OTHERWISE. 2. ALL DIMENSIONS MEASURE UNFINISHED SURFACES UNLESS SPECIFIED OTHERWISE. 3. DIMENSIONS ARE TO BE READ AND NOT SCALED OFF. 4. ANY DISCREPANCIES IN THE DRAWING ARE TO BE BROUGHT TO THE IMMEDIATE NOTICE OF THE SUPERVISION TEAM.				STR_12
	Construction of Doksum Primary School				MARCH, 2026	SCALE
	DRAWING TITLE					NTS
	TRUSS_JOINTING_DETAILS					

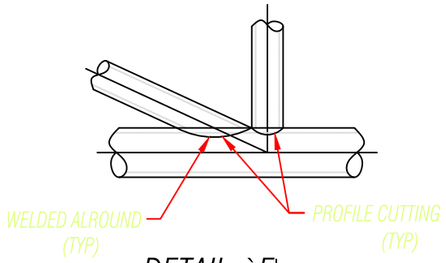

DETAIL-`E'

(TYP DET. AT PIPE TO PIPE JUNCTIONS)

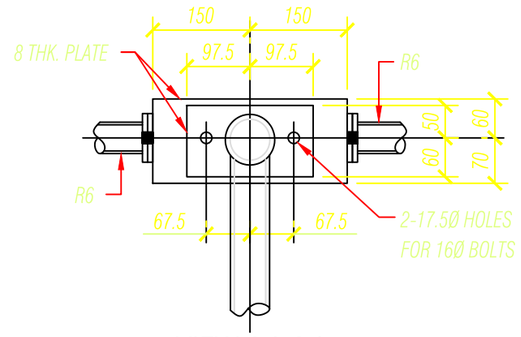

VIEW 24-24

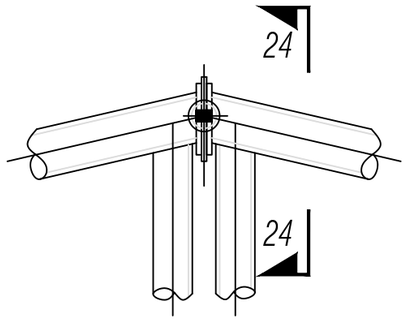

DETAIL-`D'

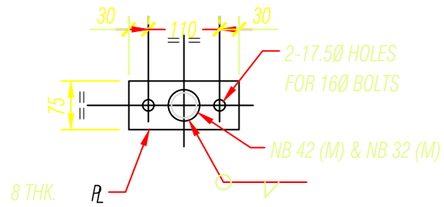

TYP DET. OF END PLATE
OF PIPE FOR CONNECTION

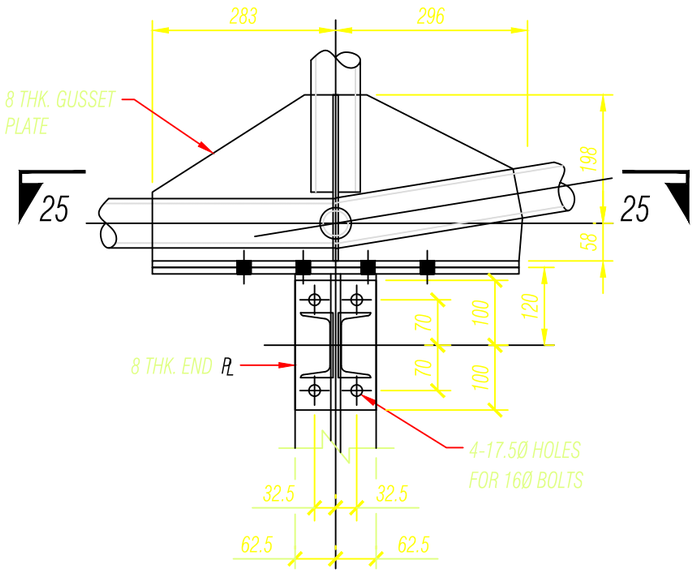

DETAIL-`F'

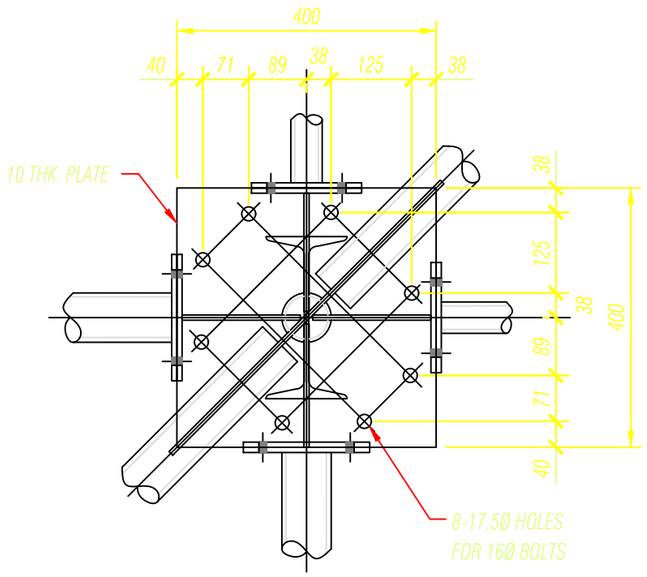

VIEW 25-25

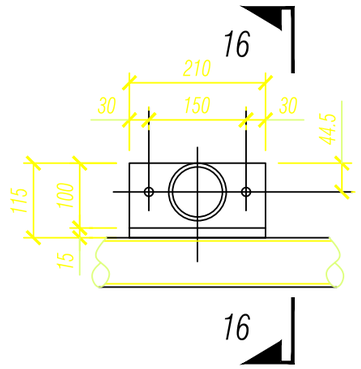

FIXING DET. OF PURLIN

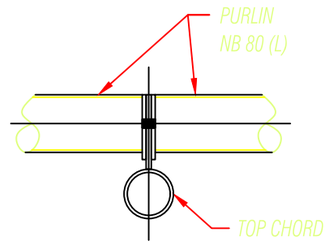

SECTION 16-16

Khorlochhu	STRUCTURAL DRAWING	NOTES	CHECKED	APPROVED	DATE	DRAWING NO.
	PROJECT TITLE: Construction of Doksum Primary School	1. ALL DIMENSIONS ARE IN MILLIMETER & ELEVATION IN METER UNLESS SPECIFIED OTHERWISE. 2. ALL DIMENSIONS MEASURE UNFINISHED SURFACES UNLESS SPECIFIED OTHERWISE. 3. DIMENSIONS ARE TO BE READ AND NOT SCALED OFF. 4. ANY DISCREPANCIES IN THE DRAWING ARE TO BE BROUGHT TO THE IMMEDIATE NOTICE OF THE SUPERVISION TEAM.				STR_13
	DRAWING TITLE: TRUSS_JINTING_DETAILS				MARCH, 2026	SCALE: NTS

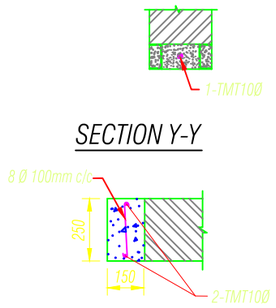

SECTION Y-Y

SECTION X-X

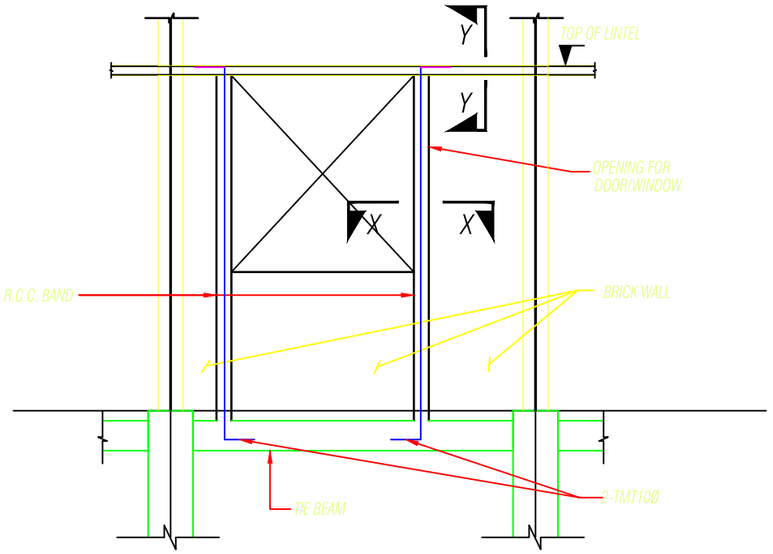

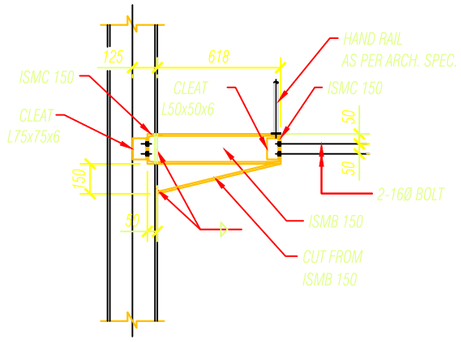

DET. OF BRACKET FOR CATWALK

(SCALE 1:25)

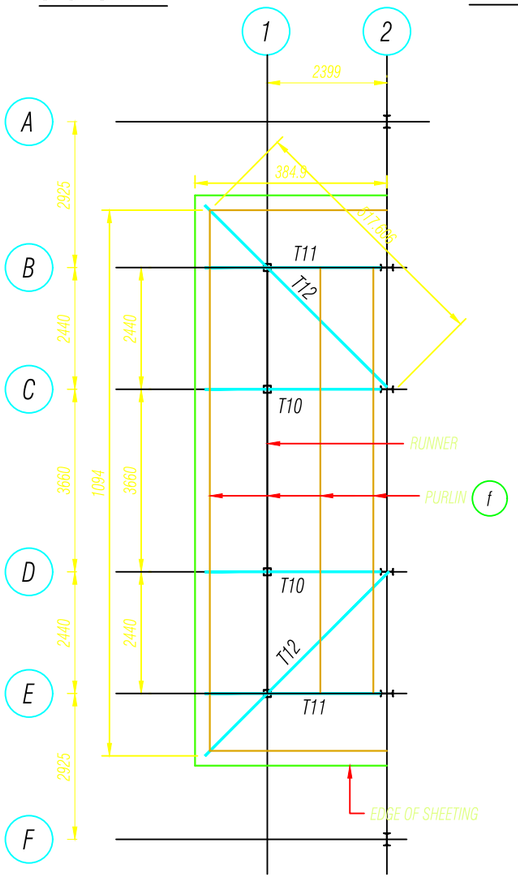

ROOF PLAN OF PORCH

(SCALE 1:100)

TYP. DET. OF STIFFENER AROUND OPENING

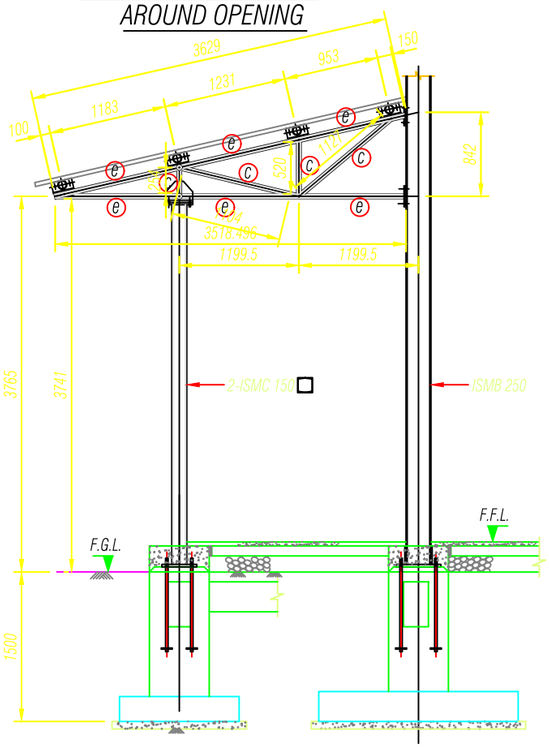

DET. OF TRUSS MKD. T10

(SCALE 1:50)

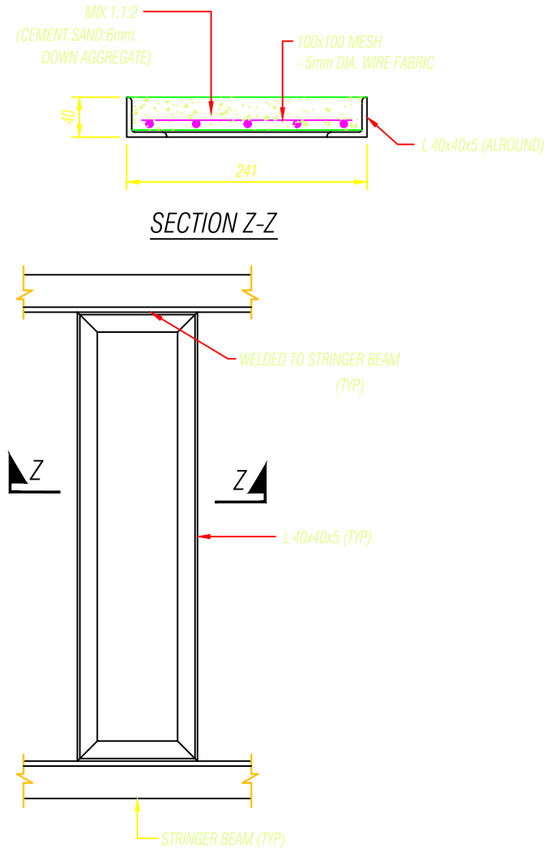

SECTION Z-Z

TYP DET. OF STAIR STEPS

(SCALE 1:10)

Khorlochhu

STRUCTURAL DRAWING

PROJECT TITLE	DRAWING TITLE
Construction of Doksum Primary School	POTCH_DETAILS

NOTES

1. ALL DIMENSIONS ARE IN MILLIMETER & ELEVATION IN METER UNLESS SPECIFIED OTHERWISE.
2. ALL DIMENSIONS MEASURE UNFINISHED SURFACES UNLESS SPECIFIED OTHERWISE.
3. DIMENSIONS ARE TO BE READ AND NOT SCALED OFF.
4. ANY DISCREPANCIES IN THE DRAWING ARE TO BE BROUGHT TO THE IMMEDIATE NOTICE OF THE SUPERVISION TEAM.

CHECKED	APPROVED	DATE	DRAWING NO.
			STR_14
		MARCH, 2026	SCALE
			NTS

NOTES FOR STRUCTURAL STEEL WORK

1. STEEL SHALL CONFORM TO THE FOLLOWING INDIAN STANDARDS.
   a) ALL STRUCTURAL SECTIONS SHAPES AND PLATES LESS THAN 20 MM. THICKNESS : IS-2062 (GRADE-A)
   b) ALL PLATES ABOVE 20 MM. THICKNESS IS - 2062 (GRADE-B)
   c) PIPES : IS - 1161(MEDIUM CLASS GRADE Yst240)
2. ALL MATERIALS SHALL BE CLEAN, RUST FREE AND STRAIGHTENED IF NECESSARY, BEFORE BEING WORKED.
3. WELDING ELECTRODES SHALL CONFORM TO IS: 814.
4. ALL MILD STEEL NUTS AND BOLTS SHALL DIMENSIONALLY CONFORM TO THE RELEVANT PARTS OF IS:1367. MATERAIL GRADE SHALL CONFORM TO PROPERTY CLASS 6.8.
5. PLAIN WASHERS SHALL BE OF MILD STEEL CONFORMING TO IS:5369 UNLESS OTHERWISE SPECIFIED. TAPERED WASHERS CONFORMING TO IS:5372 & IS:5374, SHALL BE USED FOR CHANNELS AND JOISTS RESPECTIVELY.
6. UNLESS NOTED OTHERWISE ALL STEEL WORK SHALL BE FABRICATED WITH ARC WELDED CONNECTIONS .
7. THE FABRICATED COMPONENTS SHALL BE ERECTED WITH MILD MILD STEEL BOLTS/ARC WELDED CONNECTIONS AS SHOWN IN THE DRAWINGS WHERE ERECTION BOLTS ARE USED. ALL HOLES FOR ERECTION BOLTS SHALL BE PULG WELDED AND SURFACES MADE GOOD AFTER ERECTION.
8. CONNECTIONS SHALL BE DEVELOPED IN LINE WITH STANDARD DETAILS SHOWN IN THE DRAWING FOR CONNECTIONS NOT COVERED BY ABOVE DETAILS, STANDARD PATTERNS OF CONNECTIONS PREVAILING IN GOOD DETAILING PRACTICE, SHALL BE FOLLOWED.
9. ALL WELDINGS ARE 3 TO 4 M.M. FILLET FOR TUBULAR SECTION & 6 TO 8 M.M. FILLET WELD FOR ROLLED SECTION
10. FILLET WELDS TERMINATING AT ENDS MUST HAVE RETURN AROUND CORNERS NOT LESS THAN TWICE THE NOMINAL SIZE SIZE OF THE WELD.
11. ALL WELDED CONNECTIONS SHOULD HAVE THEIR CENTRE OF GRAVITY COINCIDING WITH THE GRAVITY AXIS OF THE MEMBER.
12. BUTT WELDS SHALL BE COMPLETE PENETRATION UNLESS NOTED OTHERWISE.
13. THE DIAMETER OF BOLT HOLES SHALL BE 1.5 MM. MORE THAN THE BOLT DIAMETER FOR STEEL TO STEEL CONNECTIONS UNLESS NOTED OTHERWISE.
14. THE DIAMETER OF HOLES FOR ANCHOR BOLTS, IN COLUMN BASE PLATE SHALL BE 5 MM. MORE THAN ACCHOR BOLT UNLESS SHOWN OTHERWISE.
15. BOLTS SHALL BE PROVIDED WITH A WASHER OF SUFFICIENT THICKNESS UNDER THE NUT TO AVIOD ANY THREADED PROTION OF THE BOLT BEING WITHIN THE PARTS BOLTED TOGETHER.
16. OPEN END TUBES SHOULD BE PROVIDED WITH 4 MM. THK. END PLATES TO PREVENT OF MOISTURE.
17. THE ERECTION CLEARANCE FOR END OF MEMBERS SHALL PREFERABLY BE NOT GREATER THAN 2 MM. AT EACH END UNLESS OTHERWISE SPECIFIED.
18. ALL GUSSET PLATES/PLATES SHALL BE 8 MM. THICK UNLESS NOTED OTHERWISE
19. SEPARATORS, DIAPHRAGMS, FILTER PLATES, WASHERS (PLAIN & TAPERED), BACKING STRIPS ETC. SHALL BE PROVIDED AS NECESSARY FOR STANDARD GOOD DETAILING OF STEEL WORK AND CONSIDERING FABRICATION AND ERECTION FACILITIES.
20. ALL FABRICATED STRUCTURES SHALL RECEIVE ONE COAT OF ZINK CHROMATE PRIMER OVER ETCHING PRIMER AT SHOP AND TWO COATS OF SYNTHETIC ENAMEL PAINT OR AS DIRECTED BY THE ENGINEER AFTER ASSEMBLY AND ERECTION, UNLESS OTHERWISE STATED.
21. STRUCTURES EMBEDDED IN CONCRETE SHALL NOT BE PAINTED.

NOTES FOR CONCRETE WORK

1. ALL DIMENSIONS ARE IN MM. UNLESS OTHERWISE STATED.
2. EL.(±)0.00 CORRESPONDS TO FINISHED GROUND LEVEL.
3. THE GRADE OF CONCRETE SHALL BE M20 UNLESS OTHERWISE STATED.
4. ALL REINFORCING BARS SHOWN THUS ARE Thermo Mechanical Treated BARS CONFORMING TO IS:1786.
5. UNLESS OTHERWISE SPECIFIED THE MINIMUM CLEAR CONCRETE COVER FOR PROTECTION OF REINFORCEMENT SHALL BE AS FOLLOWS:

ITEMS	TOP	BOT.	SIDE
FOOTINGS.	50	50	50
TIE BEAMS	40	40	40
PEDESTAL	40	40	40

6. UNLESS SPECIFIED OTHERWISE ALL HOOKS, BENDS, LAPS, SPLICED ETC. SHALL BE ASPER LATEST IS:456 & OTHER RELEVANT INDIAN STANDARDS.
7. UNLESS SPECIFIED OTHERWISE, NOT MORE THAN 50% OF THE BARS SHALL BE LAPPED AT ANY SECTION.
8. THE SAFE NET BEARING CAPACITY OF SOIL FOR FOUNDATION DESIGN HAS BEEN CONSIDERED AS 10 T/SQ.M AT A DEPTH OF 1.5 M. BELOW G.L.

Khorlochhu

STRUCTURAL DRAWING

PROJECT TITLE	DRAWING TITLE
Construction of Doksum Primary School	STRUCTURAL_NOTES

NOTES

1. ALL DIMENSIONS ARE IN MILLIMETER & ELEVATION IN METER UNLESS SPECIFIED OTHERWISE.
2. ALL DIMENSIONS MEASURE UNFINISHED SURFACES UNLESS SPECIFIED OTHERWISE.
3. DIMENSIONS ARE TO BE READ AND NOT SCALED OFF.
4. ANY DISCREPANCIES IN THE DRAWING ARE TO BE BROUGHT TO THE IMMEDIATE NOTICE OF THE SUPERVISION TEAM.

CHECKED	APPROVED	DATE	DRAWING NO.
			STR_15
		MARCH, 2026	SCALE
			NTS

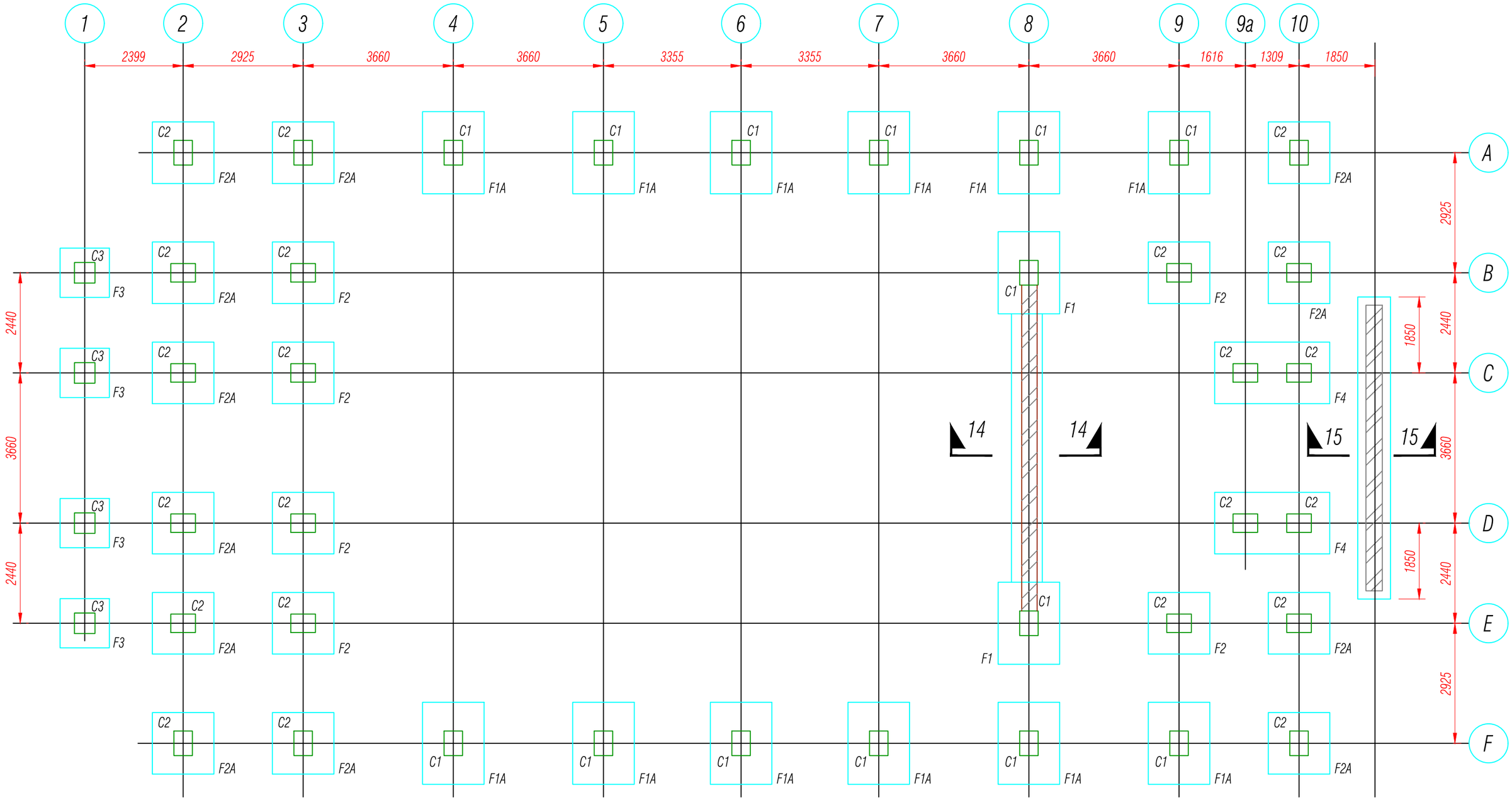

FOUNDATION PLAN

(SCALE 1:100)

Khorlochhu

STRUCTURAL DRAWING

PROJECT TITLE	DRAWING TITLE
Construction of Doksum Primary School	RCC_FOOTING_LAYOUT_PLAN

NOTES

1. ALL DIMENSIONS ARE IN MILLIMETER & ELEVATION IN METER UNLESS SPECIFIED OTHERWISE.
2. ALL DIMENSIONS MEASURE UNFINISHED SURFACES UNLESS SPECIFIED OTHERWISE.
3. DIMENSIONS ARE TO BE READ AND NOT SCALED OFF.
4. ANY DISCREPANCIES IN THE DRAWING ARE TO BE BROUGHT TO THE IMMEDIATE NOTICE OF THE SUPERVISION TEAM.

CHECKED	APPROVED	DATE	DRAWING NO.
			STR_16
		MARCH, 2026	SCALE
			NTS

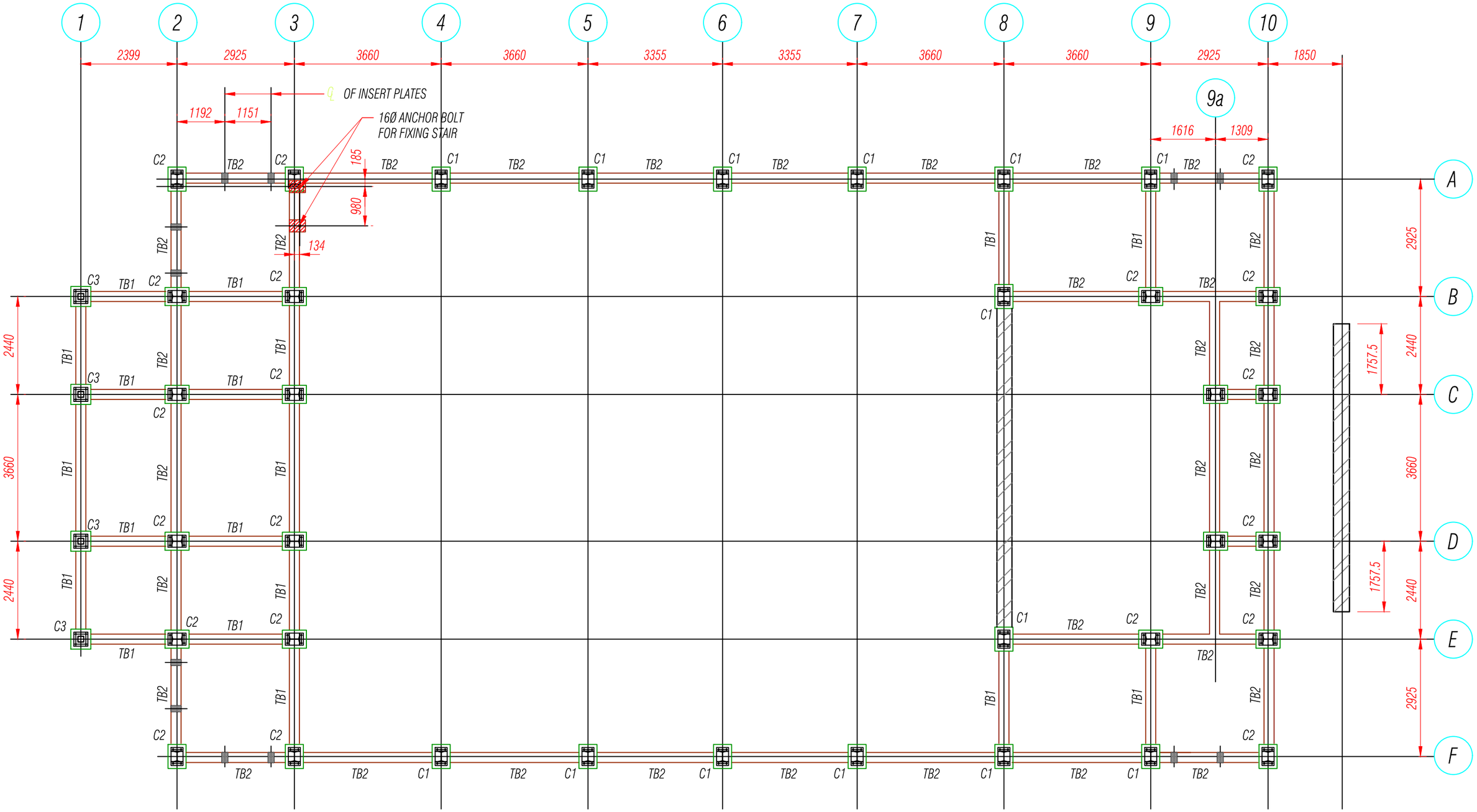

PLAN AT TIE BEAM LEVEL

(SCALE 1:100)

Khorlochhu

STRUCTURAL DRAWING

PROJECT TITLE	DRAWING TITLE
Construction of Doksum Primary School	PLAN_AT_THE_BEAM_LEVEL

NOTES

1. ALL DIMENSIONS ARE IN MILLIMETER & ELEVATION IN METER UNLESS SPECIFIED OTHERWISE.
2. ALL DIMENSIONS MEASURE UNFINISHED SURFACES UNLESS SPECIFIED OTHERWISE.
3. DIMENSIONS ARE TO BE READ AND NOT SCALED OFF.
4. ANY DISCREPANCIES IN THE DRAWING ARE TO BE BROUGHT TO THE IMMEDIATE NOTICE OF THE SUPERVISION TEAM.

CHECKED	APPROVED	DATE	DRAWING NO.
			STR_17
		MARCH, 2026	SCALE
			NTS

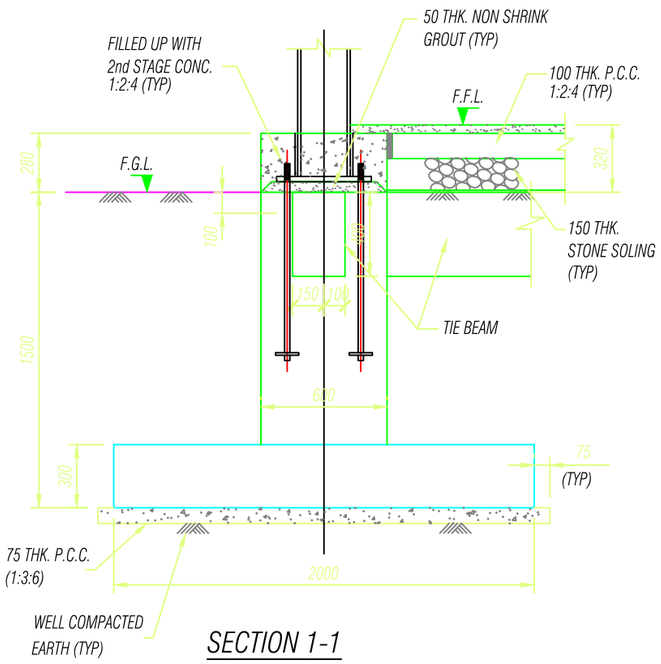

SECTION 1-1
(FOR FDN. MKD. F1A)
(SCALE 1:25)

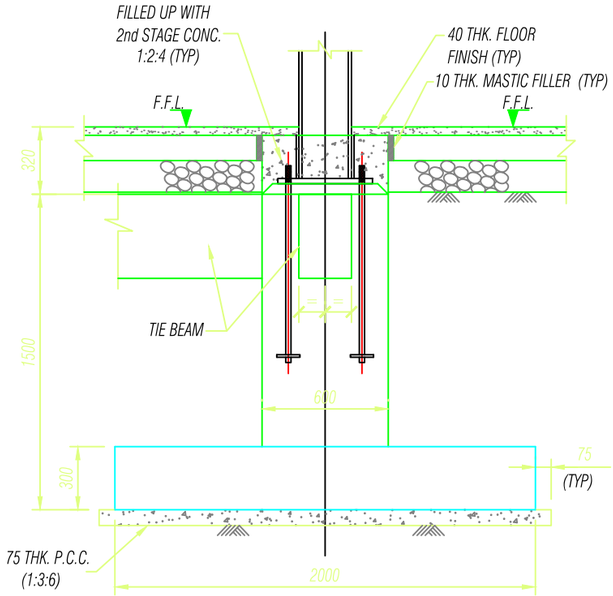

SECTION 2-2
(FOR FDN. MKD. F1)
(SCALE 1:25)

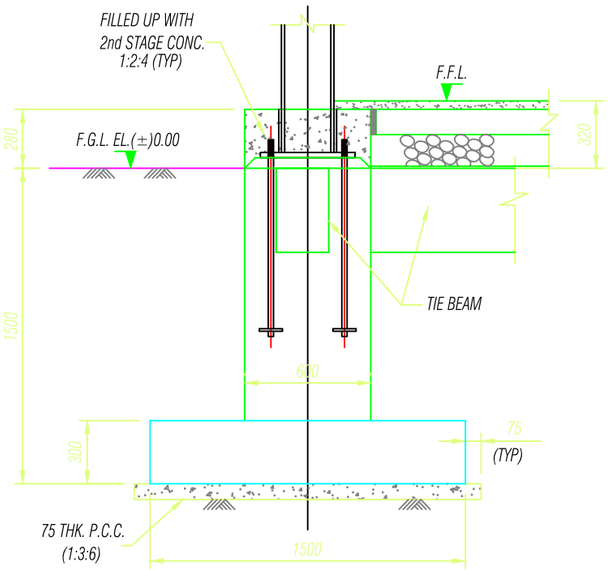

SECTION 3-3
(FOR FDN. MKD. F2A)
(SCALE 1:25)

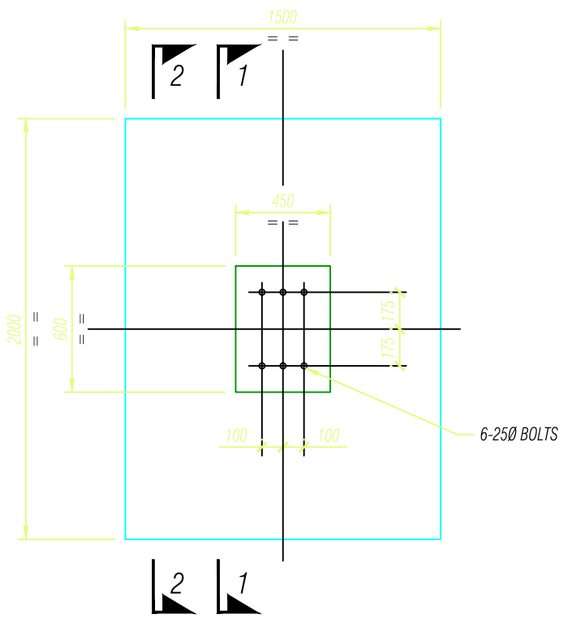

DET. OF FDN. MKD. F1 & F1A
(SCALE 1:25)

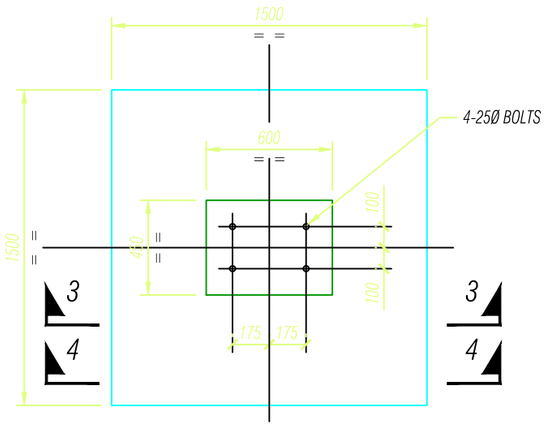

DET. OF FDN. MKD. F2 & F2A
(SCALE 1:25)

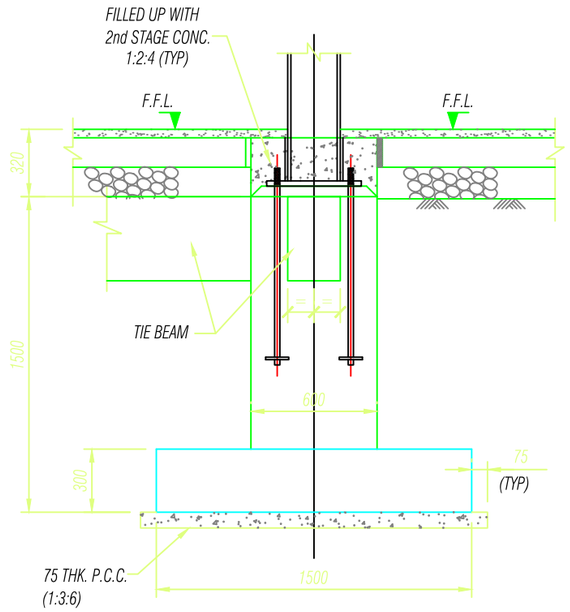

SECTION 4-4
(FOR FDN. MKD. F2)
(SCALE 1:25)

Khorlochhu

STRUCTURAL DRAWING

PROJECT TITLE	DRAWING TITLE
Construction of Doksum Primary School	SECTION_DETAILS

NOTES

1. ALL DIMENSIONS ARE IN MILLIMETER & ELEVATION IN METER UNLESS SPECIFIED OTHERWISE.
2. ALL DIMENSIONS MEASURE UNFINISHED SURFACES UNLESS SPECIFIED OTHERWISE.
3. DIMENSIONS ARE TO BE READ AND NOT SCALED OFF.
4. ANY DISCREPANCIES IN THE DRAWING ARE TO BE BROUGHT TO THE IMMEDIATE NOTICE OF THE SUPERVISION TEAM.

CHECKED	APPROVED	DATE	DRAWING NO.
			STR_18
		MARCH, 2026	SCALE
			NTS

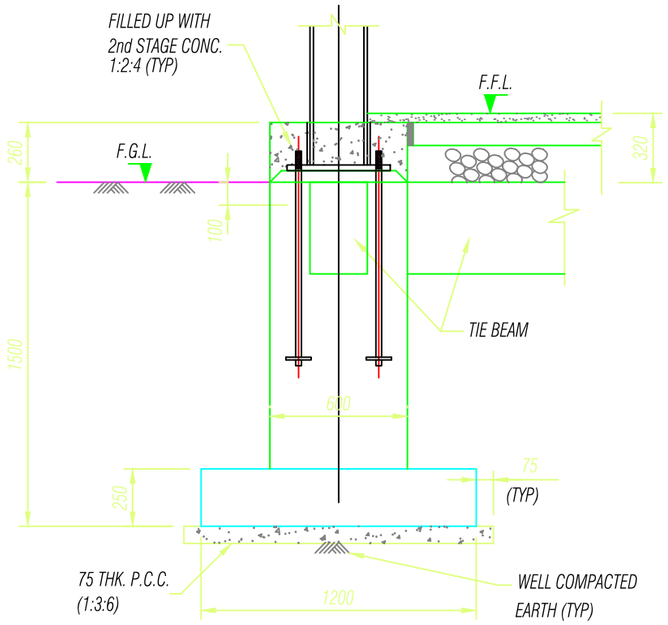

SECTION 5-5

(FOR FDN. MKD. F3)

(SCALE 1:25)

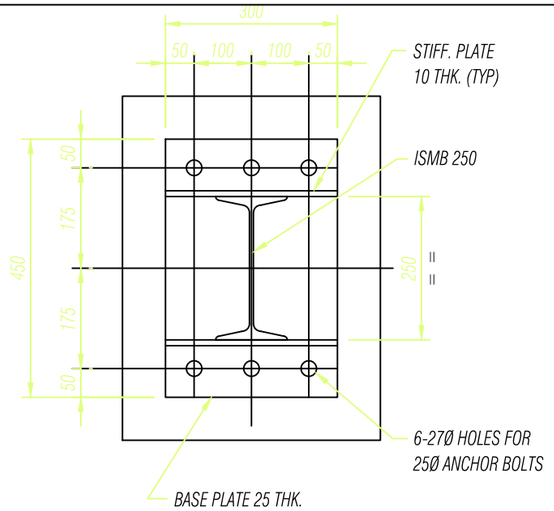

DET. OF BASE PLATE FOR COLUMN MKD. C1

(SCALE 1:10)

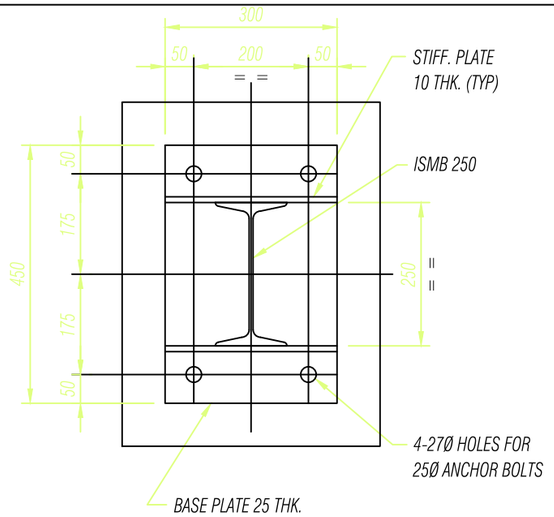

DET. OF BASE PLATE FOR COLUMN MKD. C2

(SCALE 1:10)

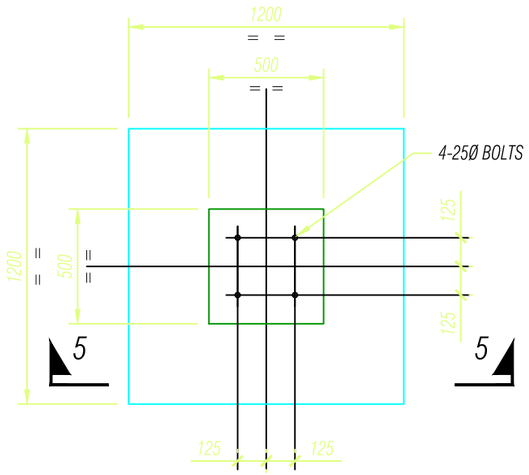

DET. OF FDN. MKD. F3

(SCALE 1:25)

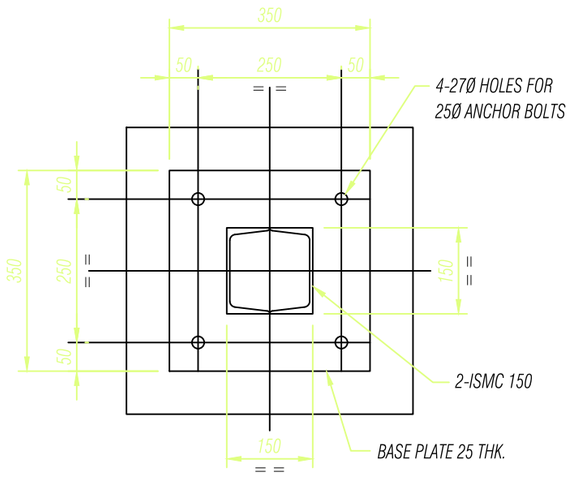

DET. OF BASE PLATE FOR COLUMN MKD. C3

(SCALE 1:10)

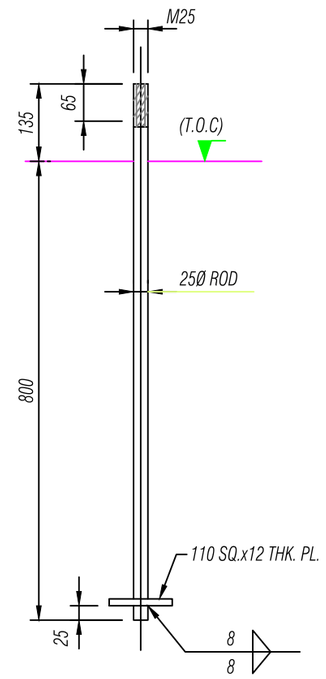

DET. OF M25 ANCHOR BOLT

(SCALE 1:10)

Khorlochhu

STRUCTURAL DRAWING

PROJECT TITLE	DRAWING TITLE
Construction of Doksum Primary School	DETAILS_AS_MENTIONED

NOTES

1. ALL DIMENSIONS ARE IN MILLIMETER & ELEVATION IN METER UNLESS SPECIFIED OTHERWISE.
2. ALL DIMENSIONS MEASURE UNFINISHED SURFACES UNLESS SPECIFIED OTHERWISE.
3. DIMENSIONS ARE TO BE READ AND NOT SCALED OFF.
4. ANY DISCREPANCIES IN THE DRAWING ARE TO BE BROUGHT TO THE IMMEDIATE NOTICE OF THE SUPERVISION TEAM.

CHECKED	APPROVED	DATE	DRAWING NO.
			STR_19
		MARCH, 2026	SCALE
			NTS

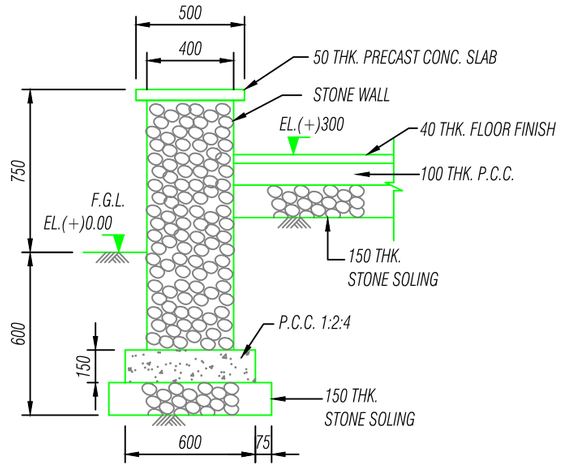

TYP. CROSS SECTION OF LOW HEIGHT STONE WALL

(SCALE 1:25)

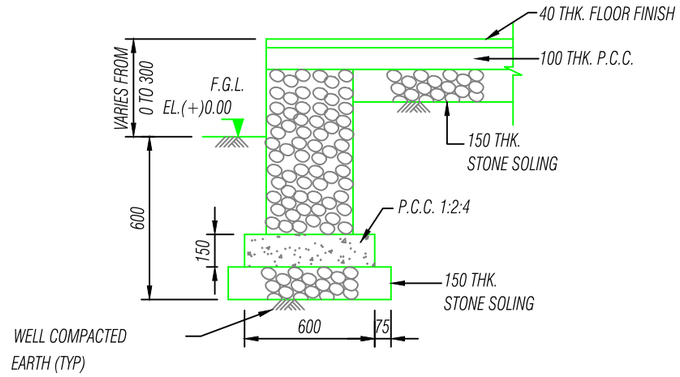

TYP. CROSS SECTION AT EDGE OF RAMP

(SCALE 1:25)

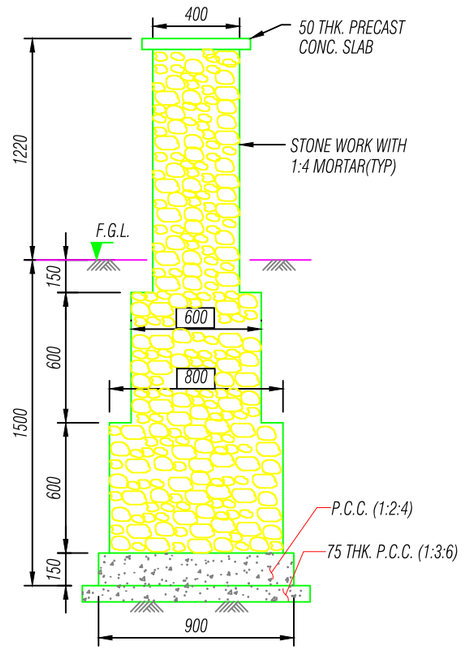

SECTION 15-15

(SCALE 1:25)

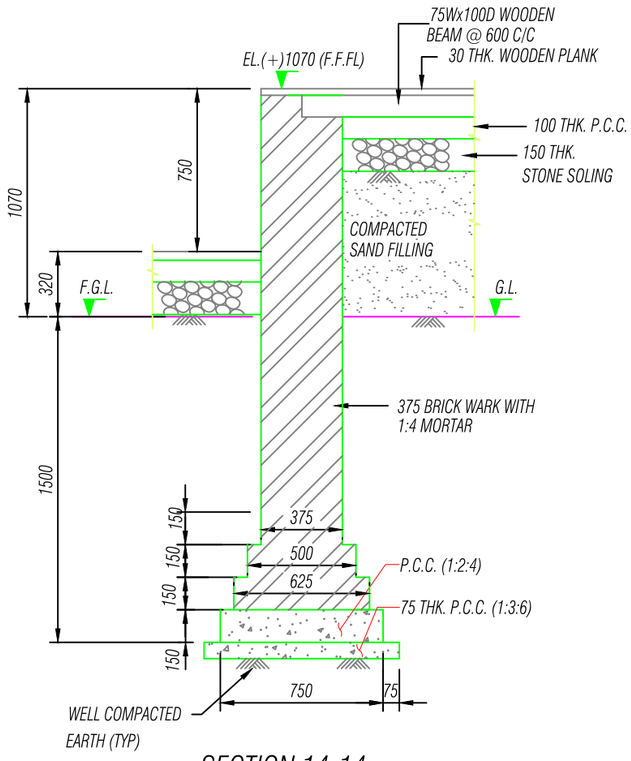

SECTION 14-14

(SCALE 1:25)

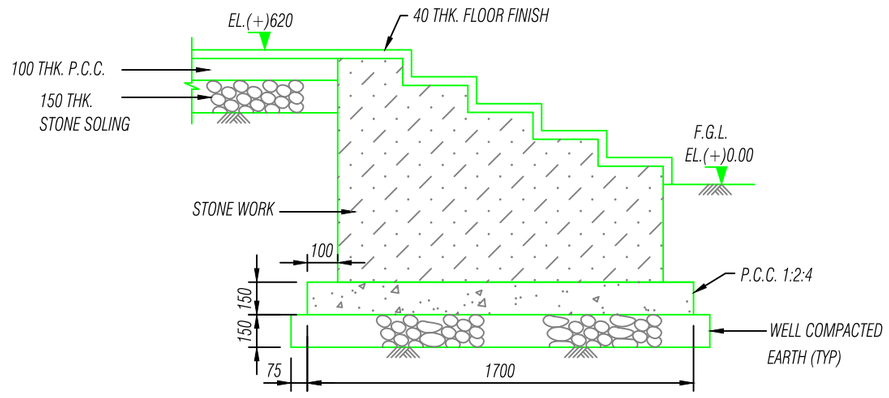

TYP. CROSS SECTION OF REAR SIDE STONE STEPS

(SCALE 1:25)

Khorlochhu

STRUCTURAL DRAWING

PROJECT TITLE	DRAWING TITLE
Construction of Doksum Primary School	DETAILS_AS_MENTIONED

NOTES

1. ALL DIMENSIONS ARE IN MILLIMETER & ELEVATION IN METER UNLESS SPECIFIED OTHERWISE.
2. ALL DIMENSIONS MEASURE UNFINISHED SURFACES UNLESS SPECIFIED OTHERWISE.
3. DIMENSIONS ARE TO BE READ AND NOT SCALED OFF.
4. ANY DISCREPANCIES IN THE DRAWING ARE TO BE BROUGHT TO THE IMMEDIATE NOTICE OF THE SUPERVISION TEAM.

CHECKED	APPROVED	DATE	DRAWING NO.
			STR_20
		MARCH, 2026	SCALE
			NTS

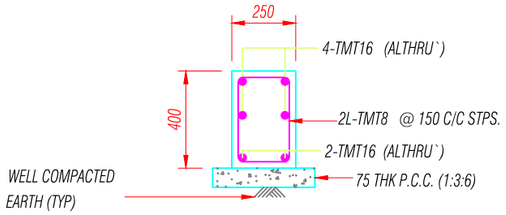

DET. OF TIE BEAM TB-1

(SCALE 1:20)

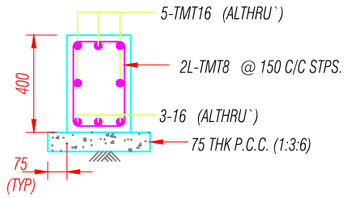

DET. OF TIE BEAM TB-2

(SCALE 1:20)

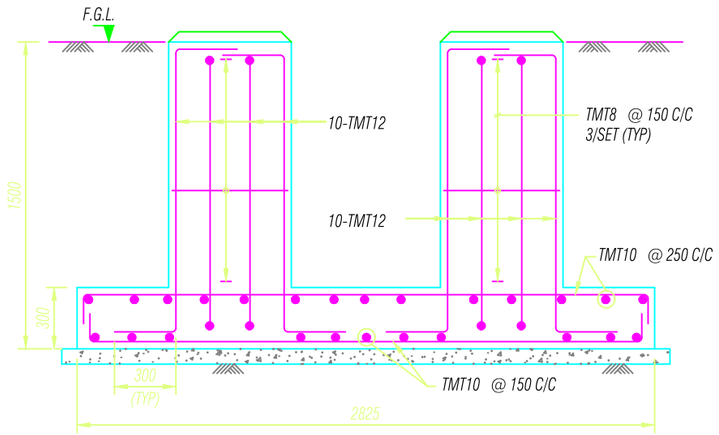

SECTION 13-13 FOR F4

(SCALE 1:25)

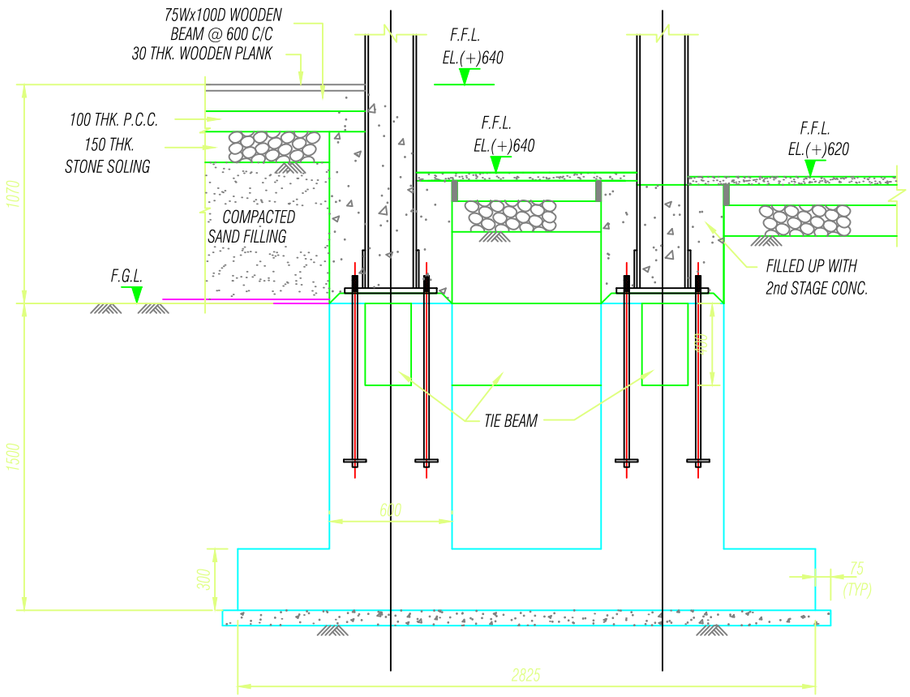

SECTION 12-12

(FOR FDN. MKD. F4)

(SCALE 1:25)

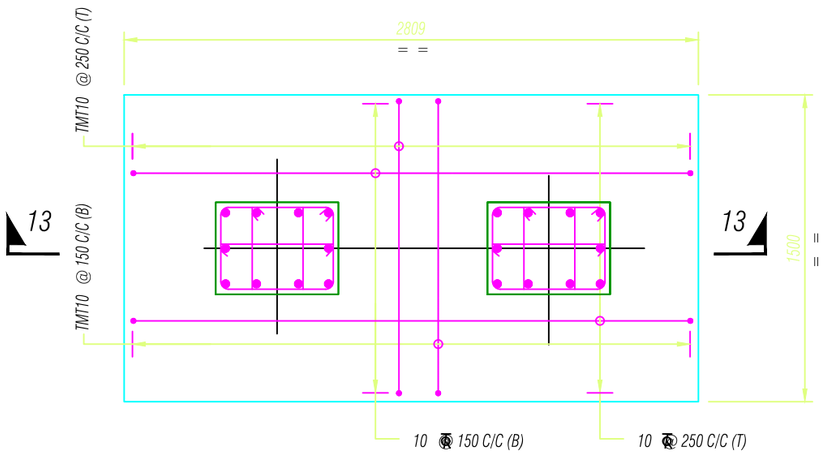

R.C DET. OF FDN. MKD. F4

(SCALE 1:25)

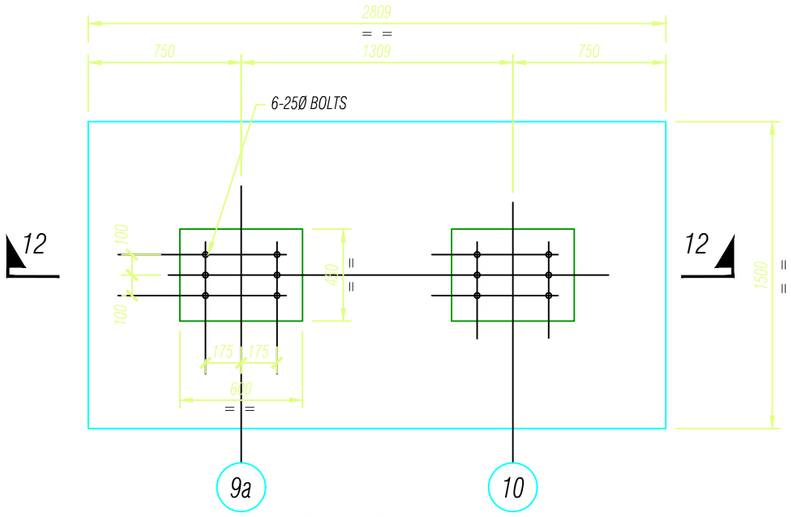

DET. OF FDN. MKD. F4

(SCALE 1:25)

Khorlochhu

STRUCTURAL DRAWING

PROJECT TITLE	DRAWING TITLE
Construction of Doksum Primary School	DETAILS_AS_MENTIONED

NOTES

1. ALL DIMENSIONS ARE IN MILLIMETER & ELEVATION IN METER UNLESS SPECIFIED OTHERWISE.
2. ALL DIMENSIONS MEASURE UNFINISHED SURFACES UNLESS SPECIFIED OTHERWISE.
3. DIMENSIONS ARE TO BE READ AND NOT SCALED OFF.
4. ANY DISCREPANCIES IN THE DRAWING ARE TO BE BROUGHT TO THE IMMEDIATE NOTICE OF THE SUPERVISION TEAM.

CHECKED	APPROVED	DATE	DRAWING NO.
			STR_21
		MARCH, 2026	SCALE
			NTS

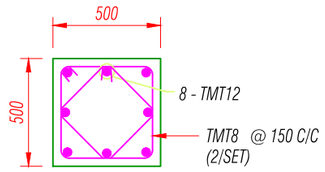

SECTION 11-11

(SCALE 1:25)

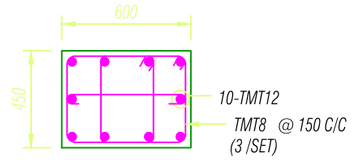

SECTION 10-10

(SCALE 1:25)

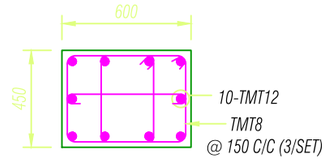

SECTION 9-9

(SCALE 1:25)

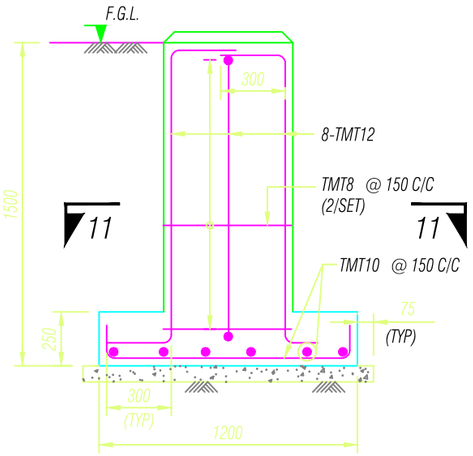

SECTION 8-8

(SCALE 1:25)

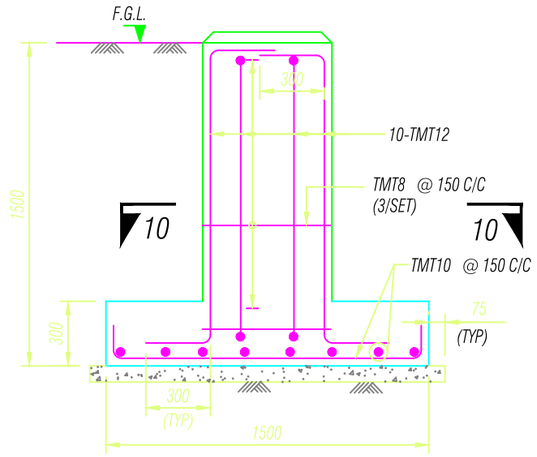

SECTION 7-7

(SCALE 1:25)

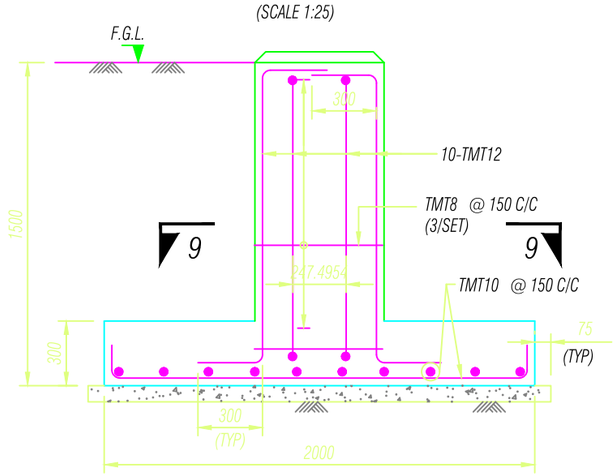

SECTION 6-6

(SCALE 1:25)

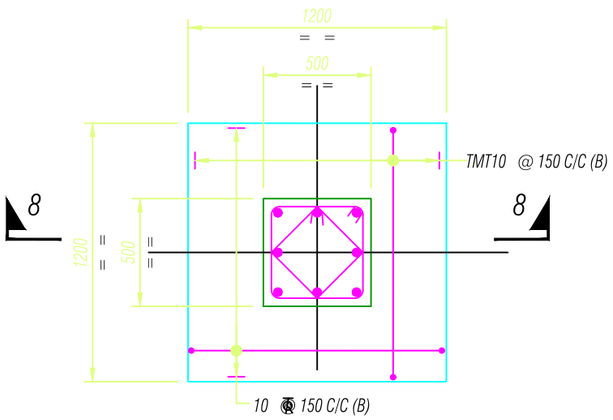

R. C. DET. OF FDN. MKD. F3

(SCALE 1:25)

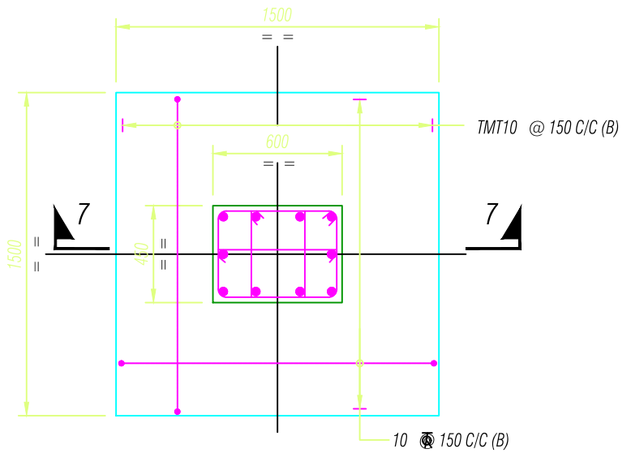

R.C DET. OF FDN. MKD. F2 & F2A

(SCALE 1:25)

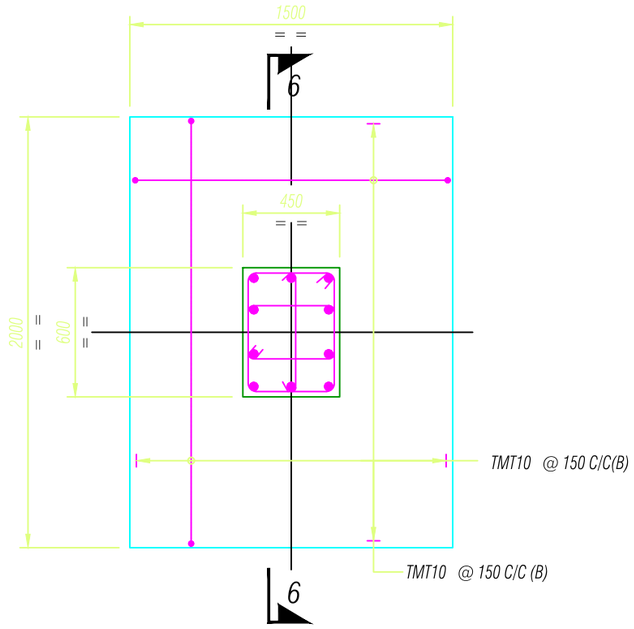

R. C. DET. OF FDN. MKD. F1 & F1A

(SCALE 1:25)

Khorlochhu

STRUCTURAL DRAWING

PROJECT TITLE	DRAWING TITLE
Construction of Doksum Primary School	DETAILS_AS_MENTIONED

NOTES

1. ALL DIMENSIONS ARE IN MILLIMETER & ELEVATION IN METER UNLESS SPECIFIED OTHERWISE.
2. ALL DIMENSIONS MEASURE UNFINISHED SURFACES UNLESS SPECIFIED OTHERWISE.
3. DIMENSIONS ARE TO BE READ AND NOT SCALED OFF.
4. ANY DISCREPANCIES IN THE DRAWING ARE TO BE BROUGHT TO THE IMMEDIATE NOTICE OF THE SUPERVISION TEAM.

CHECKED	APPROVED	DATE	DRAWING NO.
			STR_22
		MARCH, 2026	SCALE
			NTS

SCHEDULE OF R.C.C. PIECE LINTEL FOR INTERNAL WALL

SPAN IN MM	SIZE		REINFORCEMENTS		STIRRUPS	WALL THICK NESS	MINIMUM BEARING ON WALL.	REMARKS.
	WIDTH	DEPTH	TOP	BOTTOM				
500 TO 1000	250 125	150 150	2-TMT 8Ø 2-TMT 8Ø	2-TMT 10Ø 2-TMT 10Ø	TMT8 @ 100mm c/c TMT8 @ 100mm c/c	250 125	150 150	
1000 TO 1500	250 125	150 150	2-TMT 8Ø 2-TMT 8Ø	3-TMT 10Ø 2-TMT 10Ø	TMT8 @ 100mm c/c TMT8 @ 100mm c/c	250 125	150 150	
1500 TO 2000	200 125	200 200	2-TMT 10Ø 2-TMT 10Ø	3-TMT 12Ø 2-TMT 12Ø	TMT8 @ 100mm c/c TMT8 @ 100mm c/c	250 125	200 200	

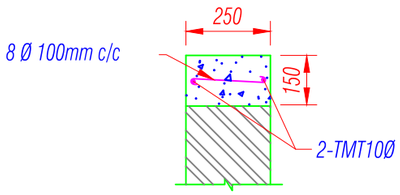

TYP DET. OF R.C.C. BAND
AT FREE END OF BRICK WALL

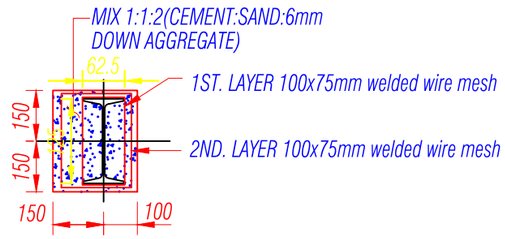

ENCASEMENT DET. OF
CORNER COLUMN

Khorlochhu

STRUCTURAL DRAWING		NOTES	CHECKED	APPROVED	DATE	DRAWING NO.
PROJECT TITLE	DRAWING TITLE	1. ALL DIMENSIONS ARE IN MILLIMETER & ELEVATION IN METER UNLESS SPECIFIED OTHERWISE. 2. ALL DIMENSIONS MEASURE UNFINISHED SURFACES UNLESS SPECIFIED OTHERWISE. 3. DIMENSIONS ARE TO BE READ AND NOT SCALED OFF. 4. ANY DISCREPANCIES IN THE DRAWING ARE TO BE BROUGHT TO THE IMMEDIATE NOTICE OF THE SUPERVISION TEAM.				STR_23
Construction of Doksum Primary School	DETAILS_AS_MENTIONED				MARCH, 2026	SCALE NTS

ELECTRICAL DRAWINGS

MULTI PURPOSE HALL

Owner - Khorlochhu Hydro Power Limited
Location - Doksum New Township, Trashiyangtse

Khorlochhu

LEGENDS

SYMBOLS	Specifications
	6W LED Ceiling Light
	20W LED Tube Light
	70W HIGH BAY CEILING LIGHT
	6W Wall Mounted Up-Down Light
	60W Ceiling Fan
	60W Wall Fan(at 2m height)
	80W Exhaust Fan
	6/10A Modular Switches
	5/6 Pin 16 Amps Switch/Socket Combined with indicator, 230V A.C.
	Switch Board with 6A Socket.
SDB	Sub Distribution Board (SDB)
	Main Control Panel Board (MCPB)

Notes 1:

1. Light points wiring shall be with 1.5sq.mm PVC insulated copper conductor
2. Light supply circuit shall be done with 2.5sq.mm PVC insulated copper conductor
3. Power circuits shall be done with 4sq.mm PVC insulated copper conductor.
4. Different conduit lines shall be used for wiring with different phases.
5. Power points wiring below window shall not be dropped from above but supplied from below the window seal level.
6. Light switchboards shall be 1400mm from finished floor level to top.
7. Power sockets shall be 400mm from finished floor level to top except in Kitchen or toilets/bathrooms (wet area) where the height shall be 1400mm from floor to bottom.
8. No power point shall be looped.
9. Main switch boards are to be flushed in the wall 230mm below the ceiling level.

Notes 2:

1. Telephone wiring shall be with 0.5Sq.mm PVC insulated and sheathed copper conductor.
2. Ducting to be at least 500mm away from electrical cable routes.
3. To provide bridging where telephone and electric cables cross.
4. Telephone terminal cabinet shall be 300x300x150mm with hole punches to receive 25mm dia conduit on all four sides and mounted at 2500mm above floor level.
5. Cable ducting shall be provided with 25mm dia PVC conduit and shall be common for drawing of TV cables.
6. RJ-11 sockets shall be provided for telephone points.
7. To supply direct lines for all the rooms where points are marked, from the terminal cabinet.
8. The incoming lines shall be brought and connected to incoming side of the terminal cabinet from where lines to all the rooms commence

Khorlochhu

ELECTRICAL DRAWING

PROJECT TITLE	DRAWING TITLE
Construction of Doksum Primary School	NOTE_&_SPECIFICATION

NOTES

1. ALL DIMENSIONS ARE IN MILLIMETER & ELEVATION IN METER UNLESS SPECIFIED OTHERWISE.
2. ALL DIMENSIONS MEASURE UNFINISHED SURFACES UNLESS SPECIFIED OTHERWISE.
3. DIMENSIONS ARE TO BE READ AND NOT SCALED OFF.
4. ANY DISCREPANCIES IN THE DRAWING ARE TO BE BROUGHT TO THE IMMEDIATE NOTICE OF THE SUPERVISION TEAM.

CHECKED	APPROVED	DATE	DRAWING NO.
			EL_1
		MARCH, 2026	SCALE
			NTS

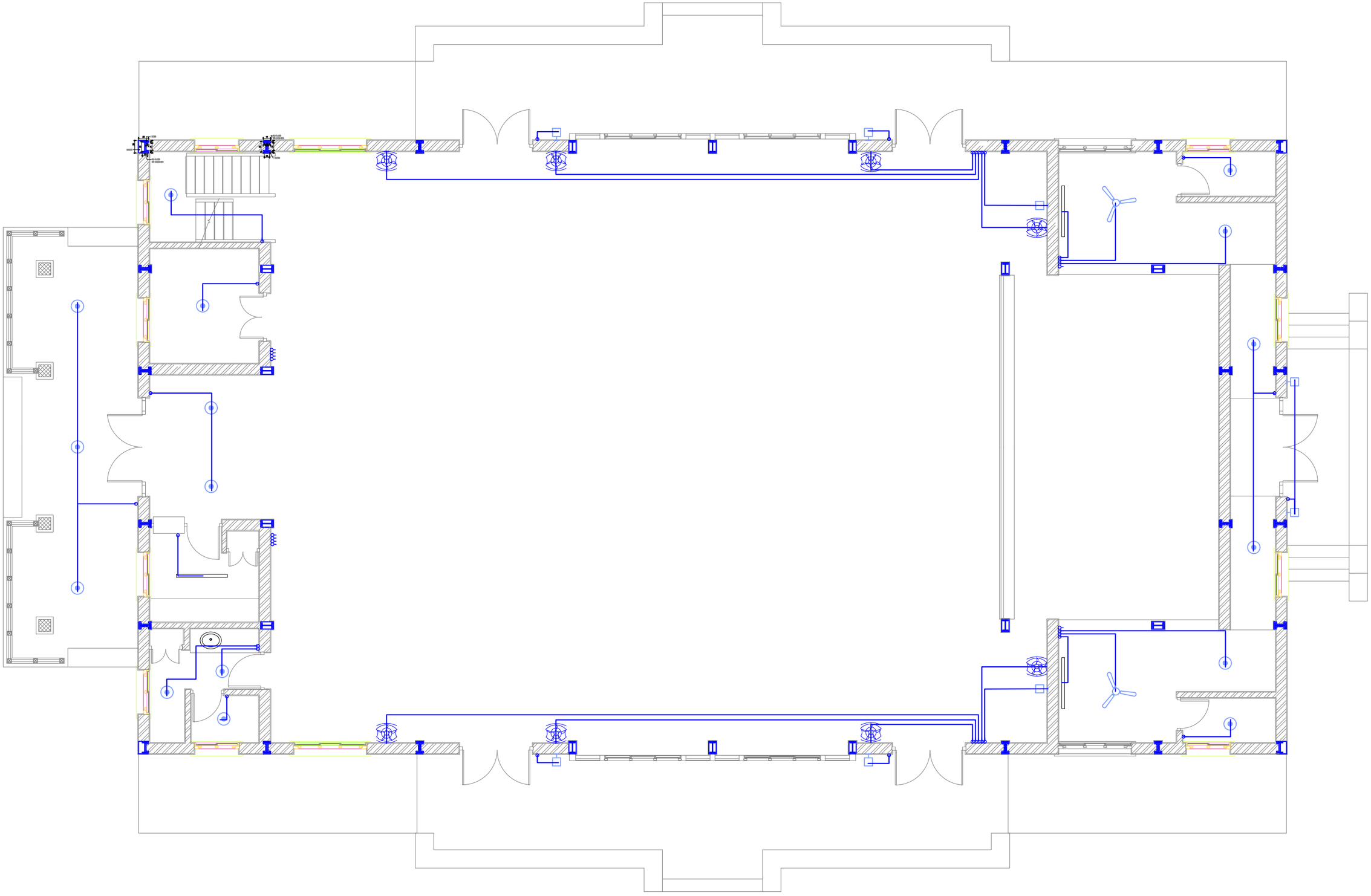

ELECTRICAL DRAWING

PROJECT TITLE	DRAWING TITLE
Construction of Doksum Primary School	FITTINGS_LAYOUT_GROUND_FLOOR

NOTES

1. ALL DIMENSIONS ARE IN MILLIMETER & ELEVATION IN METER UNLESS SPECIFIED OTHERWISE.
2. ALL DIMENSIONS MEASURE UNFINISHED SURFACES UNLESS SPECIFIED OTHERWISE.
3. DIMENSIONS ARE TO BE READ AND NOT SCALED OFF.
4. ANY DISCREPANCIES IN THE DRAWING ARE TO BE BROUGHT TO THE IMMEDIATE NOTICE OF THE SUPERVISION TEAM.

CHECKED	APPROVED	DATE	DRAWING NO.
			EL_2
		MARCH, 2026	SCALE
			NTS

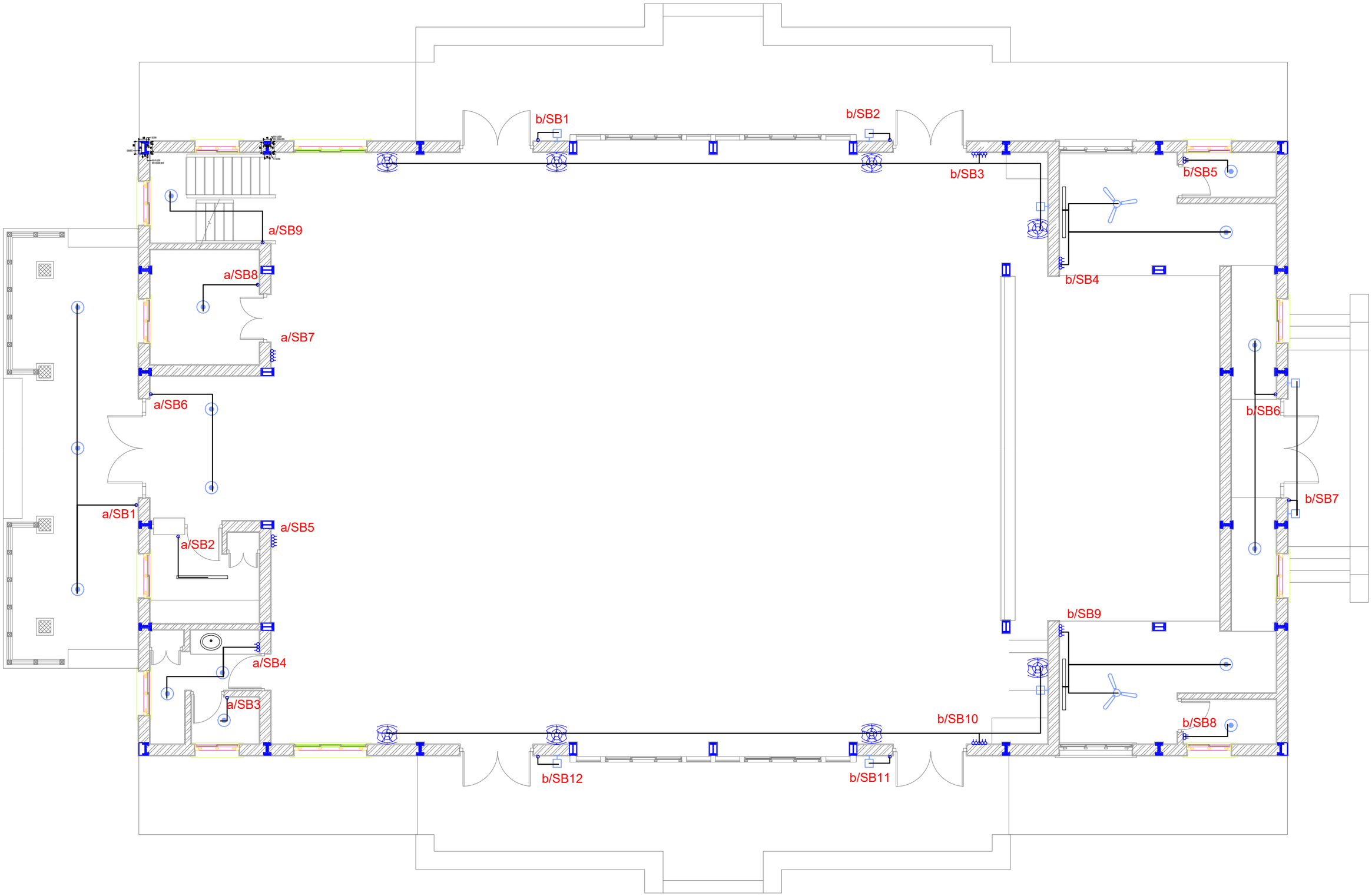

Khorlochhu

ELECTRICAL DRAWING

PROJECT TITLE	DRAWING TITLE
Construction of Doksum Primary School	FITTINGS_&_CONDUITS_LAYOUT_GROUND_FLOOR

NOTES

1. ALL DIMENSIONS ARE IN MILLIMETER & ELEVATION IN METER UNLESS SPECIFIED OTHERWISE.
2. ALL DIMENSIONS MEASURE UNFINISHED SURFACES UNLESS SPECIFIED OTHERWISE.
3. DIMENSIONS ARE TO BE READ AND NOT SCALED OFF.
4. ANY DISCREPANCIES IN THE DRAWING ARE TO BE BROUGHT TO THE IMMEDIATE NOTICE OF THE SUPERVISION TEAM.

CHECKED	APPROVED	DATE	DRAWING NO.
			EL_3
		MARCH, 2026	SCALE
			NTS

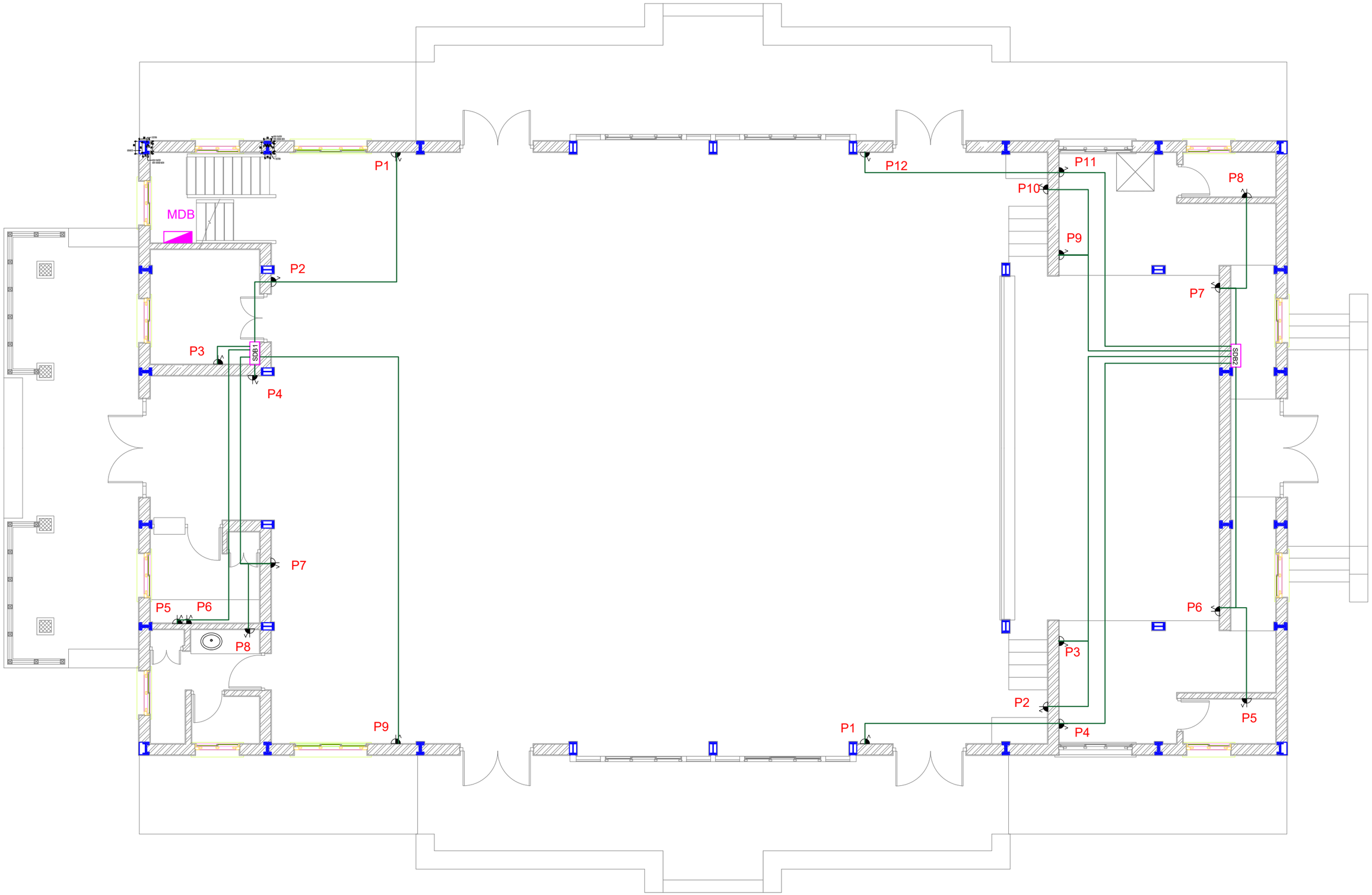

ELECTRICAL DRAWING

PROJECT TITLE	DRAWING TITLE
Construction of Doksum Primary School	POWER_SOCKET_OUTLET_&_CONDUITS_LAYOUT_GROUND_FLOOR

NOTES

1. ALL DIMENSIONS ARE IN MILLIMETER & ELEVATION IN METER UNLESS SPECIFIED OTHERWISE.
2. ALL DIMENSIONS MEASURE UNFINISHED SURFACES UNLESS SPECIFIED OTHERWISE.
3. DIMENSIONS ARE TO BE READ AND NOT SCALED OFF.
4. ANY DISCREPANCIES IN THE DRAWING ARE TO BE BROUGHT TO THE IMMEDIATE NOTICE OF THE SUPERVISION TEAM.

CHECKED	APPROVED	DATE	DRAWING NO.
			EL_4
		MARCH, 2026	SCALE
			NTS

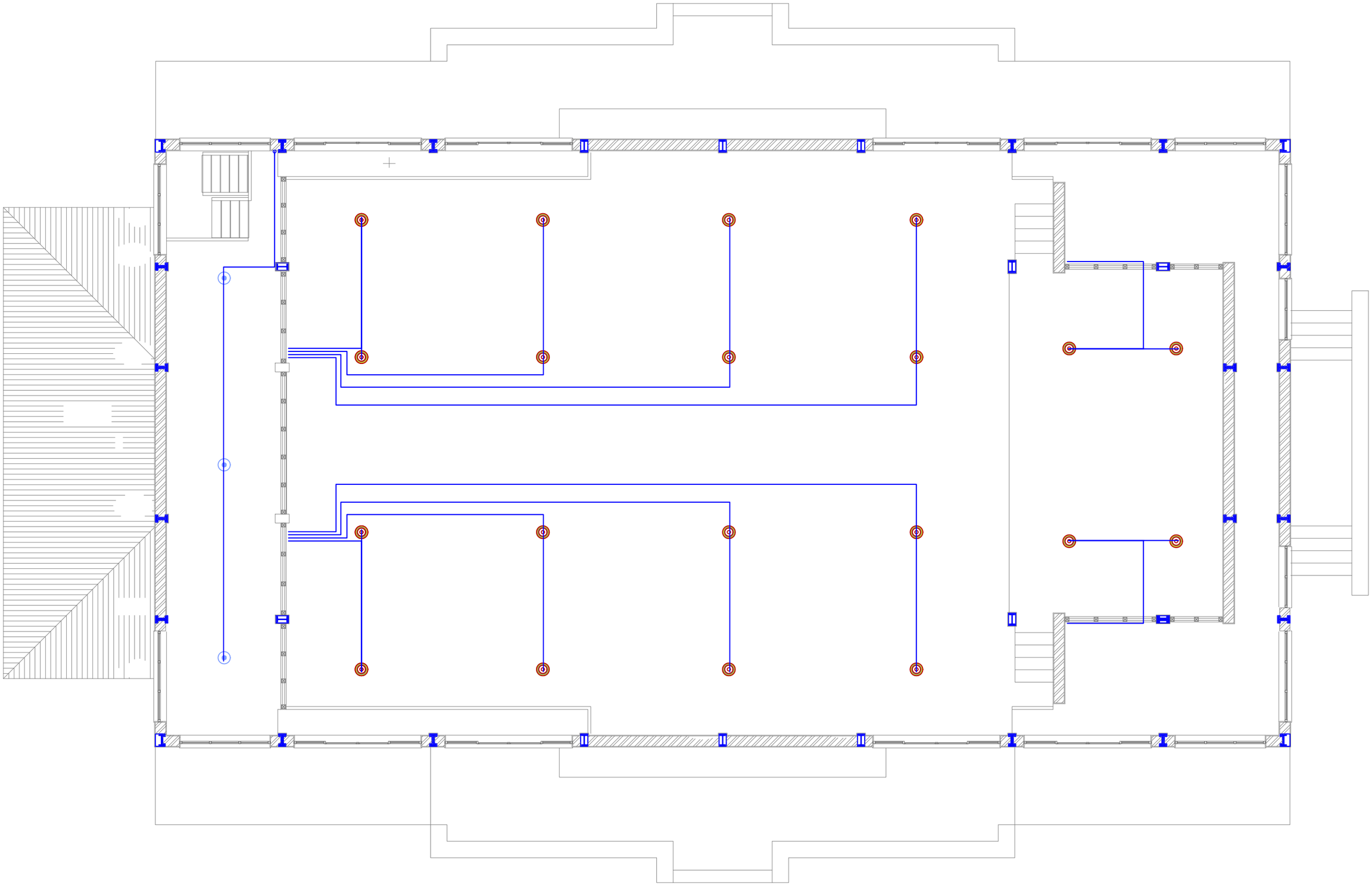

Khorlochhu

ELECTRICAL DRAWING

PROJECT TITLE	DRAWING TITLE
Construction of Doksum Primary School	FITTINGS_LAYOUT_FIRST_FLOOR

NOTES

1. ALL DIMENSIONS ARE IN MILLIMETER & ELEVATION IN METER UNLESS SPECIFIED OTHERWISE.
2. ALL DIMENSIONS MEASURE UNFINISHED SURFACES UNLESS SPECIFIED OTHERWISE.
3. DIMENSIONS ARE TO BE READ AND NOT SCALED OFF.
4. ANY DISCREPANCIES IN THE DRAWING ARE TO BE BROUGHT TO THE IMMEDIATE NOTICE OF THE SUPERVISION TEAM.

CHECKED	APPROVED	DATE	DRAWING NO.
			EL_5
		MARCH, 2026	SCALE
			NTS

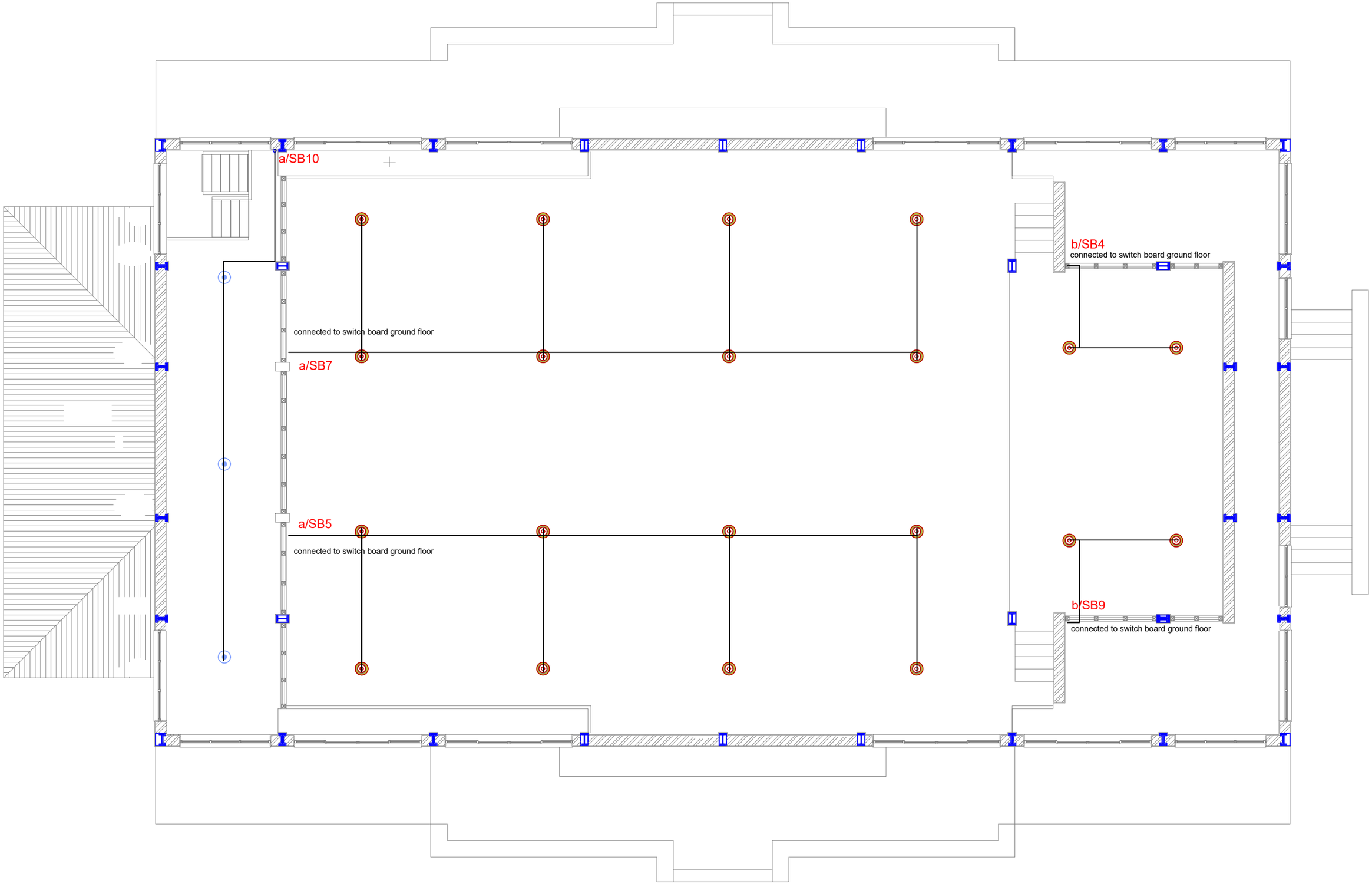

Khorlochhu

ELECTRICAL DRAWING

PROJECT TITLE	DRAWING TITLE
Construction of Doksum Primary School	FITTINGS_&_CONDUITS_LAYOUT_FIRST_FLOOR

NOTES

1. ALL DIMENSIONS ARE IN MILLIMETER & ELEVATION IN METER UNLESS SPECIFIED OTHERWISE.
2. ALL DIMENSIONS MEASURE UNFINISHED SURFACES UNLESS SPECIFIED OTHERWISE.
3. DIMENSIONS ARE TO BE READ AND NOT SCALED OFF.
4. ANY DISCREPANCIES IN THE DRAWING ARE TO BE BROUGHT TO THE IMMEDIATE NOTICE OF THE SUPERVISION TEAM.

CHECKED	APPROVED	DATE	DRAWING NO.
			EL_6
		MARCH, 2026	SCALE
			NTS

SDB1

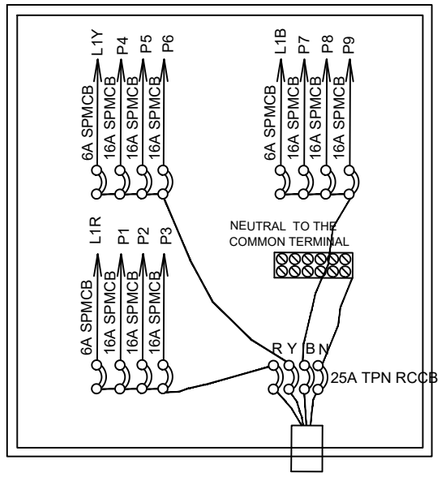

4x10Sqmm. PVC insulated
Cu. condr. cable 1.1KV grade

4 WAY TPN DB,DOUBLE DOOR TYPE & 25A TPN RCCB WITH FOLLOWING OUTGOING:
6A SPMCB - 2 NOs.
16A SPMCB - 9 NOs.

BALANCE LOAD IN WATTS

R-PHASE	Y-PHASE	B-PHASE
L1- 616	L1- 602	L1- SPARE
P1- 2000	P4- 2000	P7-2000
P2- 2000	P5- 2000	P8-2000
P3- 2000	P6- 2000	P9-2000
6,616	6,602	6,000

L1R=a/SB1,a/SB2,a/SB3,a/SB4,a/SB5
L1Y=a/SB6,a/SB7,a/SB8,a/SB9,a/SB10

Connected load= 19,218 W
Demand load(L.F- 70%)= 13,453 W

SDB-2

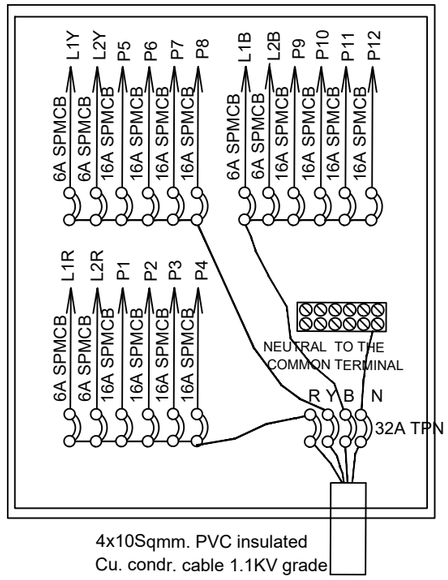

4x10Sqmm. PVC insulated
Cu. condr. cable 1.1KV grade

6WAY TPN DB,DOUBLE DOOR TYPE & 32A TPN RCCB WITH FOLLOWING OUTGOING:
6A SPMCB - 2 NOs.
16A SPMCB - 12 NOs.

BALANCE LOAD IN WATTS

R-PHASE	Y-PHASE	B-PHASE
L1- SPARE	L1- 502	L1- 502
L2- SPARE	L2- SPARE	L2- SPARE
P1- 2000	P5- 2000	P9- 2000
P2- 2000	P6- 2000	P10- 2000
P3- 2000	P7- 2000	P11- 2000
P4- 2000	P8- 2000	P12- 2000
8,000	8,502	8,502

L1Y= b/SB1,b/SB2,b/SB3,b/SB4,b/SB5,b/SB6
L1B= b/SB7,b/SB8,b/SB9,b/SB10,b/SB11,b/SB12

Connected load=25,004 W
Demand load(L.F-70%)=17,503 W

Khorlochhu

ELECTRICAL DRAWING

PROJECT TITLE	DRAWING TITLE
Construction of Doksum Primary School	SDB_DETAILS

NOTES

1. ALL DIMENSIONS ARE IN MILLIMETER & ELEVATION IN METER UNLESS SPECIFIED OTHERWISE.
2. ALL DIMENSIONS MEASURE UNFINISHED SURFACES UNLESS SPECIFIED OTHERWISE.
3. DIMENSIONS ARE TO BE READ AND NOT SCALED OFF.
4. ANY DISCREPANCIES IN THE DRAWING ARE TO BE BROUGHT TO THE IMMEDIATE NOTICE OF THE SUPERVISION TEAM.

CHECKED	APPROVED	DATE	DRAWING NO.
			EL_7
		MARCH, 2026	SCALE
			NTS

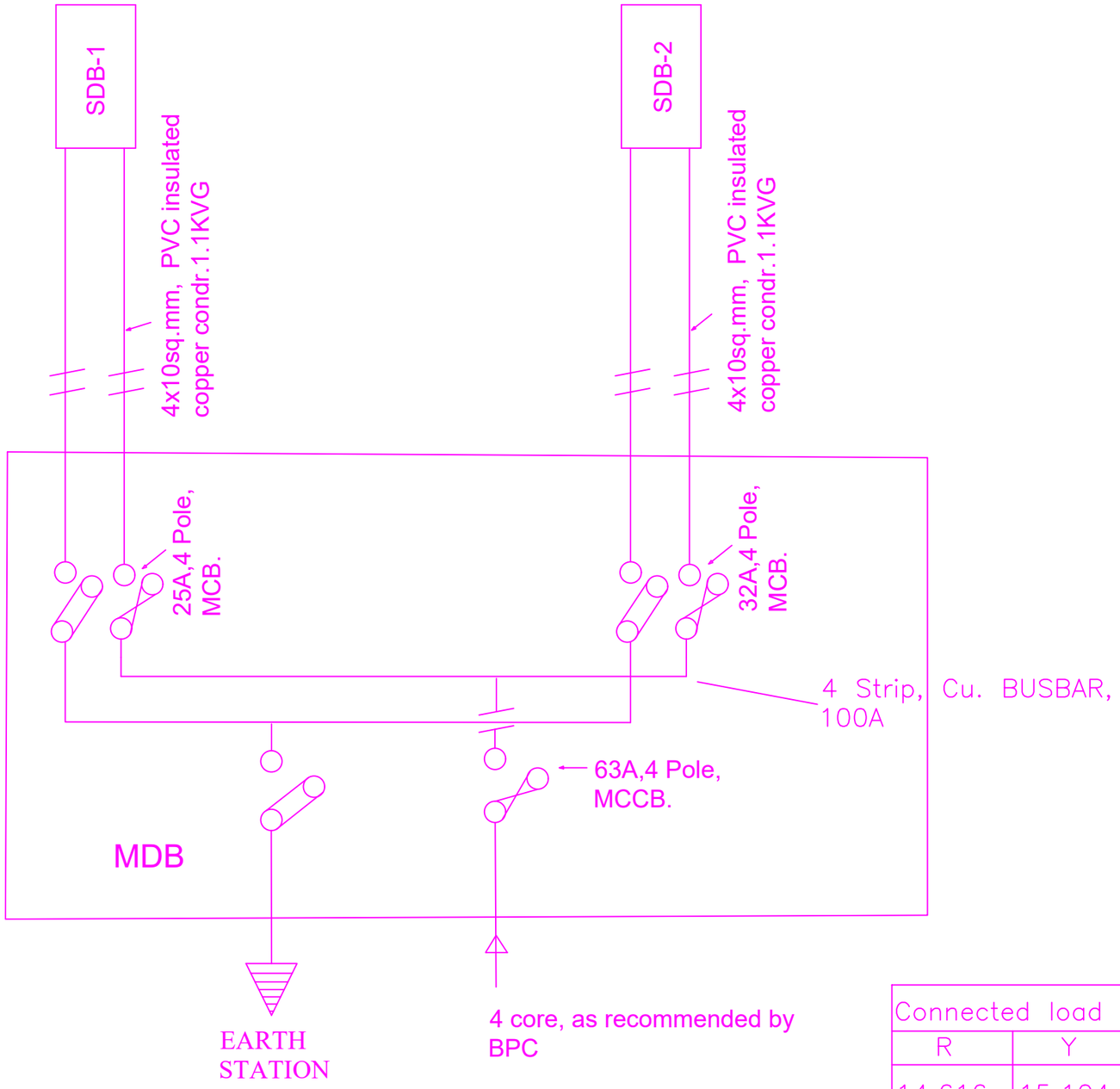

Connected load (watt)			Total load
R	Y	B	
14,616	15,104	14,502	44,222
Demand load (considering 0.7 load factor)=30,955 W			

Khorlochhu

ELECTRICAL DRAWING

PROJECT TITLE	DRAWING TITLE
Construction of Doksum Primary School	MDB_DETAILS

NOTES

1. ALL DIMENSIONS ARE IN MILLIMETER & ELEVATION IN METER UNLESS SPECIFIED OTHERWISE.
2. ALL DIMENSIONS MEASURE UNFINISHED SURFACES UNLESS SPECIFIED OTHERWISE.
3. DIMENSIONS ARE TO BE READ AND NOT SCALED OFF.
4. ANY DISCREPANCIES IN THE DRAWING ARE TO BE BROUGHT TO THE IMMEDIATE NOTICE OF THE SUPERVISION TEAM.

CHECKED	APPROVED	DATE	DRAWING NO.
			EL_8
		MARCH, 2026	SCALE
			NTS

MOIT

MINISTRY OF INFRASTRUCTURE AND TRANSPORT

DEPARTMENT OF INFRASTRUCTURE DEVELOPMENT
INFRASTRUCTURE DESIGN DIVISION

ARCHITECTURAL DRAWINGS
Toilet for School-HPL PARTITION
(Girls 7 Units)

JANUARY/2025 (REVISION)

Toilet for Schools-HPL PARTITON
(Girls 7 Units)

ARCHITECTURAL DRAWINGS

SL NO	DRAWING TITLE	DRAWING NO
1	Drawing list	TLT-HPL-7/ARC/00
2	Finished schedule	TLT-HPL-7/ARC/01
3	Plan for Boys	TLT-HPL-7/ARC/02
4	Water Tank Slab Plan	TLT-HPL-7/ARC/03
5	Roof Plan	TLT-HPL-7/ARC/04
6	Front Elevation	TLT-HPL-7/ARC/05a
7	Rear Elevation	TLT-HPL-7/ARC/05b
8	Side Elevation~1	TLT-HPL-7/ARC/06a
9	Side Elevation~2	TLT-HPL-7/ARC/06b
10	Section A-A	TLT-HPL-7/ARC/07a
11	Section B-B	TLT-HPL-7/ARC/07b
12	Section C-C	TLT-HPL-7/ARC/07c
13	MS grill G1	TLT-HPL-7/ARC/08
14	Ventilation-V1	TLT-HPL-7/ARC/09
15	Door Details-D1	TLT-HPL-7/ARC/10
16	Door Details-D	TLT-HPL-7/ARC/11
17	Typical Eaves Board & Sofit Details	TLT-HPL-7/ARC/12
18	Water supply distribution pipe layout plan at Tank Area	TLT-HPL-7/ARC/13
19	Water supply pipe layout plan	TLT-HPL-7/ARC/14a
20	Waste water & soil pipe layout plan	TLT-HPL-7/ARC/14b
21	Septic tank plan, Section-AA, Cross section & Soak pit plan	TLT-HPL-7/ARC/15
22	MS grating drain cover	TLT-HPL-7/ARC/16
23	Typical Railing Details	TLT-HPL-7/ARC/17

ROYAL GOVERNMENT OF BHUTAN
MINISTRY OF INFRASTRUCTURE AND TRANSPORT

DEPARTMENT OF INFRASTRUCTURE DEVELOPMENT
INFRASTRUCTURE DESIGN DIVISION

Notes:
-All dimensions are in mm unless specified otherwise.
-All dimensions measure unfinished surfaces unless specified otherwise.
-All dimensions are to be read and not scaled off.
- Any discrepancies in drawings should immediately be brought to the notice of the design team

PROJECT TITLE:
TOILET FOR SCHOOLS -HPL
(GIRLS-7 UNITS)

REV	DATE	DESCRIPTION
1	Jan/2025	1. Cubicle partitions changed to 18mm thick HPL boards. 2. Cubicle doors changed to 18mm thick HPL doors. 3. Granite flooring changed to anti-skid floor tiles. 4. Steel Gate changed to doors with WPC frame & PVC shutter. 5. WPC door shutter changed to PVC shutter. 6. Cement board ceilings (both internal & sofit) changed to PVC ceiling. 7. MS ceiling framing changed to Manufacturer's framing system for PVC ceiling. 8. Internal wall & ceiling finish changed to water-proof plastic paint. 9. Wall tiles included in the passage/corridor area and wash basin wall area. 10. Plinth protection & drain updated as per porch roof coverage.

DRAWING TITLE: DRAWING LIST

DESIGNED BY:	DRAWN BY:	CHECKED BY:	SCALE:
(TSHERING CHODEN) CHIEF ARCHITECT	(PEMA CHOZOM) ASST. ARCHITECT	(TSHERING CHODEN) CHIEF ARCHITECT	NTS
REVIEWED & APPROVED BY:	DATE:	DRAWING NO.	
(TSHERING CHODEN) CHIEF ARCHITECT	OCTOBER/2024	TLT-HPL-7/ARC/00	

FINISHING SCHEDULE

	PLINTH PROTECTION	RAMP	WALLS	ROOFING	CEILING AT ROOF OVERHANG	EAVES BOARD
EXTERNAL FINISHING	75mm thick RCC 1:2:4 with TMT 10 Ø 200mm c/c both ways over 150mm stone soling, with brush/broom finish on top.	20mm thick rough-finished Kota Stone over cement mortar bed.	Cement putty over 20mm cement plaster 1:4 mix 2 or more coats of water-proof plastic paint (exterior grade) over cement primer.	Pre-painted galvanized iron sheets-PPGI (0.5mm thick)	8mm thick PVC lining fixed on the framing system as per manufacturer's specifications.	3mm thick MS sheet over 20x20x3 MS square tube frame welded to truss. 2 or more coats of synthetic enamel paint over red oxide primer.

	FLOOR SPACE	FLOOR	WALLS	CEILING
Internal Finishing	Toilets	600x600 anti-skid tiles (8mm thick, matte-finish) over cement mortar bed, 1:4 mix.	600x300 glossy ceramic wall tiles (6mm thick) up to sill level from FF level. Rest will be 15mm cement plaster, 1:4 mix finished with 2 more coats of water-proof plastic paint over cement primer.	For RCC slab: 6mm cement plaster finished with 2 or more coats of water-proof plastic paint over cement primer. For other areas: 8mm thick PVC ceiling tiles fixed on the framing system as per manufacturer's specifications.
Internal Finishing	Wash basin area and passages	600x600 anti-skid tiles (8mm thick, matte-finish) over cement mortar bed, 1:4 mix.	600x900 glossy ceramic wall tiles (6mm thick) up to sill level from FF level. Rest will be 15mm cement plaster, 1:4 mix finished with 2 more coats of water-proof plastic paint over cement primer.	
Jamtho	Jamtho and water tank space	PCC 1:2:4 with floating coat of neat cement finish.	15mm thk. cement plaster, 1:3 mix	

ROYAL GOVERNMENT OF BHUTAN
MINISTRY OF INFRASTRUCTURE AND TRANSPORT

DEPARTMENT OF INFRASTRUCTURE DEVELOPMENT
INFRASTRUCTURE DESIGN DIVISION

Notes:
-All dimensions are in mm unless specified otherwise.
-All dimensions measure unfinished surfaces unless specified otherwise.
-All dimensions are to be read and not scaled off.
- Any discrepancies in drawings should immediately be brought to the notice of the design team

PROJECT TITLE:
TOILET FOR SCHOOLS -HPL (GIRLS-7 UNITS)

REV	DATE	DESCRIPTION
1	Jan/2025	1. Cubicle partitions changed to 18mm thick HPL boards. 2. Cubicle doors changed to 18mm thick HPL doors. 3. Granite flooring changed to anti-skid floor tiles. 4. Steel Gate changed to doors with WPC frame & PVC shutter. 5. WPC door shutter changed to PVC shutter. 6. Cement board ceilings (both internal & sofit) changed to PVC ceiling. 7. MS ceiling framing changed to Manufacturer's framing system for PVC ceiling. 8. Internal wall & ceiling finish changed to water-proof plastic paint. 9. Wall tiles included in the passage/corridor area and wash basin wall area. 10. Plinth protection & drain updated as per porch roof coverage.

DRAWING TITLE: FINISHING SCHEDULE

DESIGNED BY:	DRAWN BY:	CHECKED BY:	SCALE:
(TSHERING CHODEN) CHIEF ARCHITECT	(PEMA CHOZOM) ASST. ARCHITECT	(TSHERING CHODEN) CHIEF ARCHITECT	1 : 50
REVIEWED & APPROVED BY: (TSHERING CHODEN) CHIEF ARCHITECT	DATE: OCTOBER/2024	DRAWING NO. TLT-HPL-7/ARC/01	

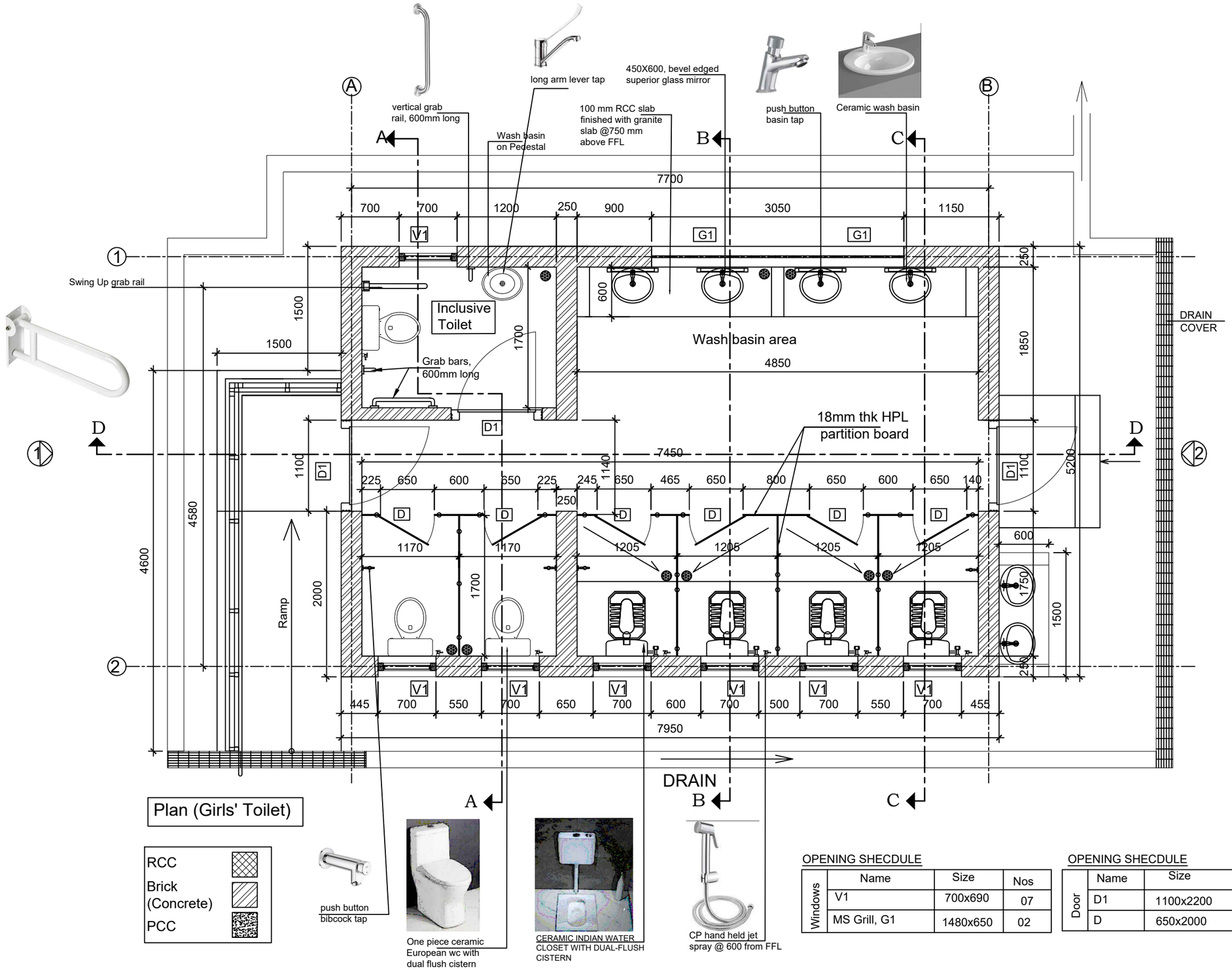

SAMPLE PARTITION FOR CUBICLE

OPENING SHECDULE

	Name	Size	Nos
Windows	V1	700x690	07
	MS Grill, G1	1480x650	02

OPENING SHECDULE

	Name	Size	Nos
Door	D1	1100x2200	03
	D	650x2000	06

ROYAL GOVERNMENT OF BHUTAN
MINISTRY OF INFRASTRUCTURE AND TRANSPORT

DEPARTMENT OF INFRASTRUCTURE DEVELOPMENT
INFRASTRUCTURE DESIGN DIVISION

Notes:
-All dimensions are in mm unless specified otherwise.
-All dimensions measure unfinished surfaces unless specified otherwise.
-All dimensions are to be read and not scaled off.
- Any discrepancies in drawings should immediately be brought to the notice of the design team

PROJECT TITLE:

TOILET FOR SCHOOLS - HPL (GIRLS-7 UNITS)

REV	DATE	DESCRIPTION
1	Jan/2025	1. Cubicle partitions changed to 18mm thick HPL boards. 2. Cubicle doors changed to 18mm thick HPL doors. 3. Granite flooring changed to anti-skid floor tiles. 4. Steel Gate changed to doors with WPC frame & PVC shutter. 5. WPC door shutter changed to PVC shutter. 6. Cement board ceilings (both internal & sofit) changed to PVC ceiling. 7. MS ceiling framing changed to Manufacturer's framing system for PVC ceiling. 8. Internal wall & ceiling finish changed to water-proof plastic paint. 9. Wall tiles included in the passage/corridor area and wash basin wall area. 10. Plinth protection & drain updated as per porch roof coverage.

DRAWING TITLE: FLOOR PLAN

DESIGNED BY:	DRAWN BY:	CHECKED BY:	SCALE:
(TSHERING CHODEN) CHIEF ARCHITECT	(PEMA CHOZOM) ASST. ARCHITECT	(TSHERING CHODEN) CHIEF ARCHITECT	1 : 50
REVIEWED & APPROVED BY: (TSHERING CHODEN) CHIEF ARCHITECT	DATE: OCTOBER/2024	DRAWING NO. TLT-HPL-7/ARC/02	

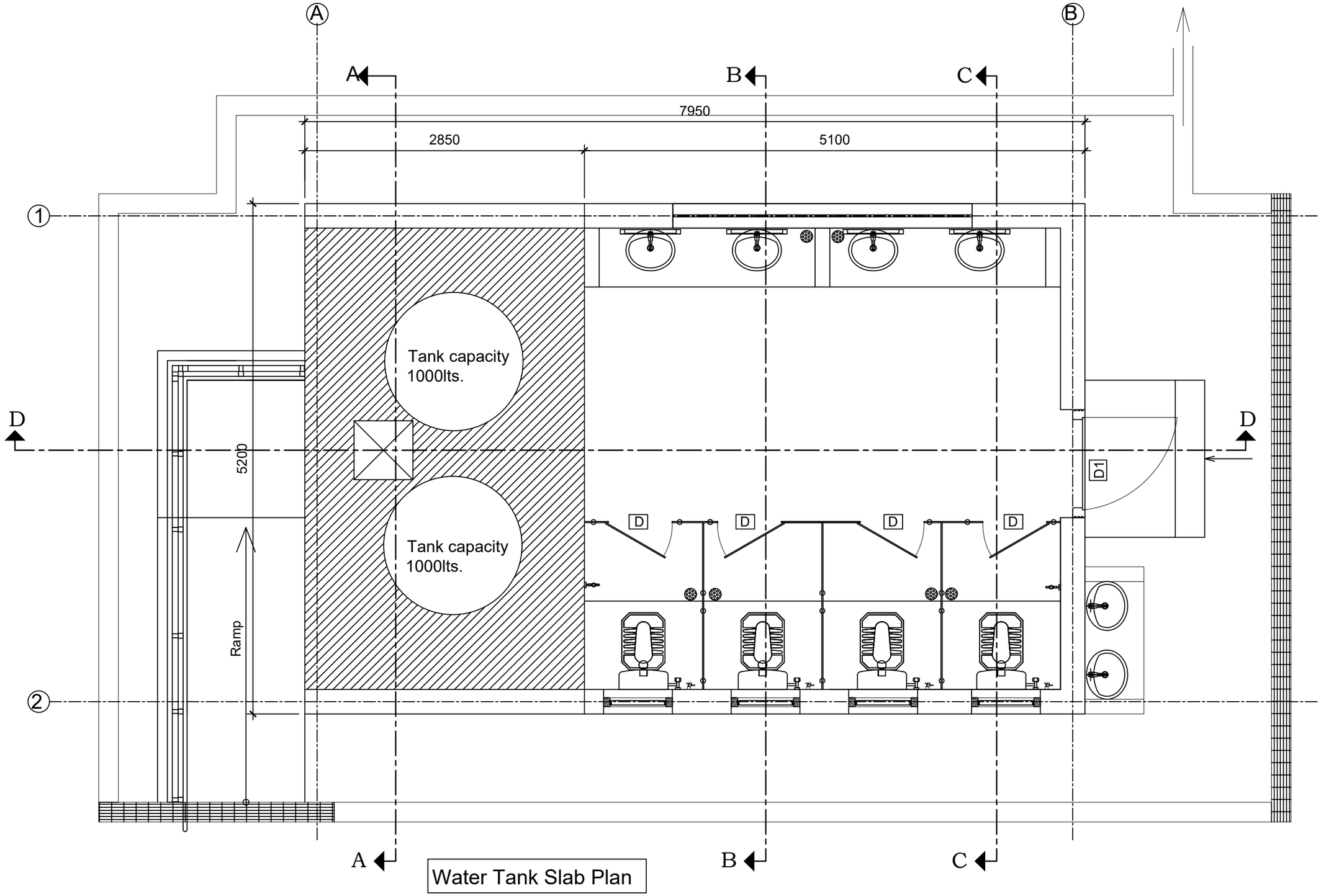

Water Tank Slab Plan

ROYAL GOVERNMENT OF BHUTAN
MINISTRY OF INFRASTRUCTURE AND TRANSPORT

DEPARTMENT OF INFRASTRUCTURE DEVELOPMENT
INFRASTRUCTURE DESIGN DIVISION

Notes:
-All dimensions are in mm unless specified otherwise.
-All dimensions measure unfinished surfaces unless specified otherwise.
-All dimensions are to be read and not scaled off.
- Any discrepancies in drawings should immediately be brought to the notice of the design team

PROJECT TITLE:

TOILET FOR SCHOOLS - HPL
(GIRLS-7 UNITS)

REV	DATE	DESCRIPTION
1	Jan/2025	1. Cubicle partitions changed to 18mm thick HPL boards. 2. Cubicle doors changed to 18mm thick HPL doors. 3. Granite flooring changed to anti-skid floor tiles. 4. Steel Gate changed to doors with WPC frame & PVC shutter. 5. WPC door shutter changed to PVC shutter. 6. Cement board ceilings (both internal & soffit) changed to PVC ceiling. 7. MS ceiling framing changed to Manufacturer's framing system for PVC ceiling. 8. Internal wall & ceiling finish changed to water-proof plastic paint. 9. Wall tiles included in the passage/corridor area and wash basin wall area. 10. Plinth protection & drain updated as per porch roof coverage.

DRAWING TITLE: WATER TANK SLAB PLAN

DESIGNED BY:	DRAWN BY:	CHECKED BY:	SCALE:
(TSHERING CHODEN) CHIEF ARCHITECT	(PEMA CHOZOM) ASST. ARCHITECT	(TSHERING CHODEN) CHIEF ARCHITECT	1 : 40
REVIEWED & APPROVED BY:	DATE:	DRAWING NO.	
(TSHERING CHODEN) CHIEF ARCHITECT	OCTOBER/2024	TLT-HPL-7/ARC/03	

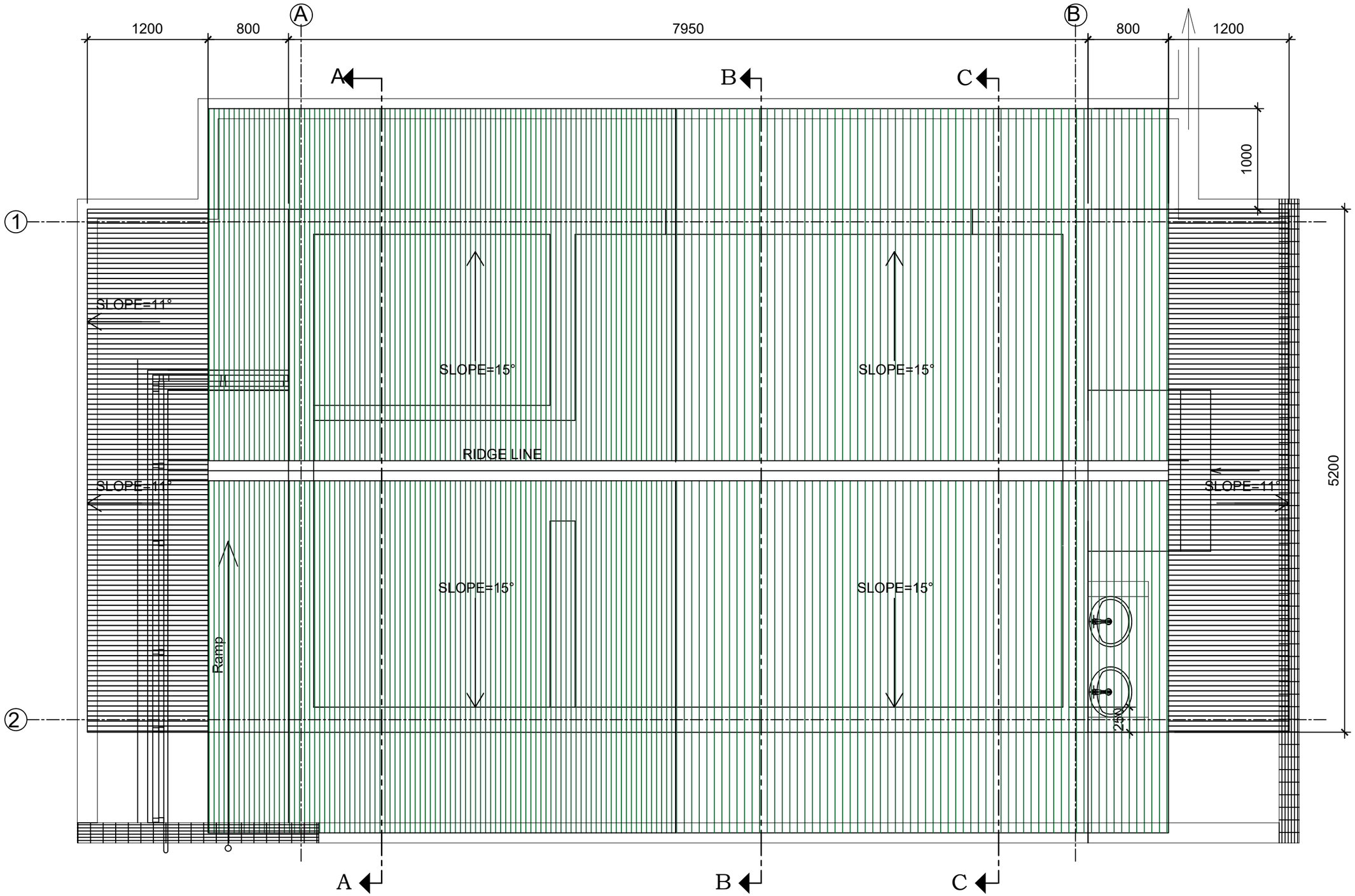

Roof Plan

ROYAL GOVERNMENT OF BHUTAN
MINISTRY OF INFRASTRUCTURE AND TRANSPORT

DEPARTMENT OF INFRASTRUCTURE DEVELOPMENT
INFRASTRUCTURE DESIGN DIVISION

Notes:
-All dimensions are in mm unless specified otherwise.
-All dimensions measure unfinished surfaces unless specified otherwise.
-All dimensions are to be read and not scaled off.
- Any discrepancies in drawings should immediately be brought to the notice of the design team

PROJECT TITLE:

TOILET FOR SCHOOLS - HPL (GIRLS-7 UNITS)

REV	DATE	DESCRIPTION
1	Jan/2025	1. Cubicle partitions changed to 18mm thick HPL boards. 2. Cubicle doors changed to 18mm thick HPL doors. 3. Granite flooring changed to anti-skid floor tiles. 4. Steel Gate changed to doors with WPC frame & PVC shutter. 5. WPC door shutter changed to PVC shutter. 6. Cement board ceilings (both internal & sofit) changed to PVC ceiling. 7. MS ceiling framing changed to Manufacturer's framing system for PVC ceiling. 8. Internal wall & ceiling finish changed to water-proof plastic paint. 9. Wall tiles included in the passage/corridor area and wash basin wall area. 10. Plinth protection & drain updated as per porch roof coverage.

DRAWING TITLE: ROOF PLAN

DESIGNED BY:	DRAWN BY:	CHECKED BY:	SCALE:
(TSHERING CHODEN) CHIEF ARCHITECT	(PEMA CHOZOM) ASST. ARCHITECT	(TSHERING CHODEN) CHIEF ARCHITECT	1 : 40
REVIEWED & APPROVED BY:	DATE:	DRAWING NO.	
(TSHERING CHODEN) CHIEF ARCHITECT	NOVEMBER/2023	TLT-HPL-7/ARC/04	

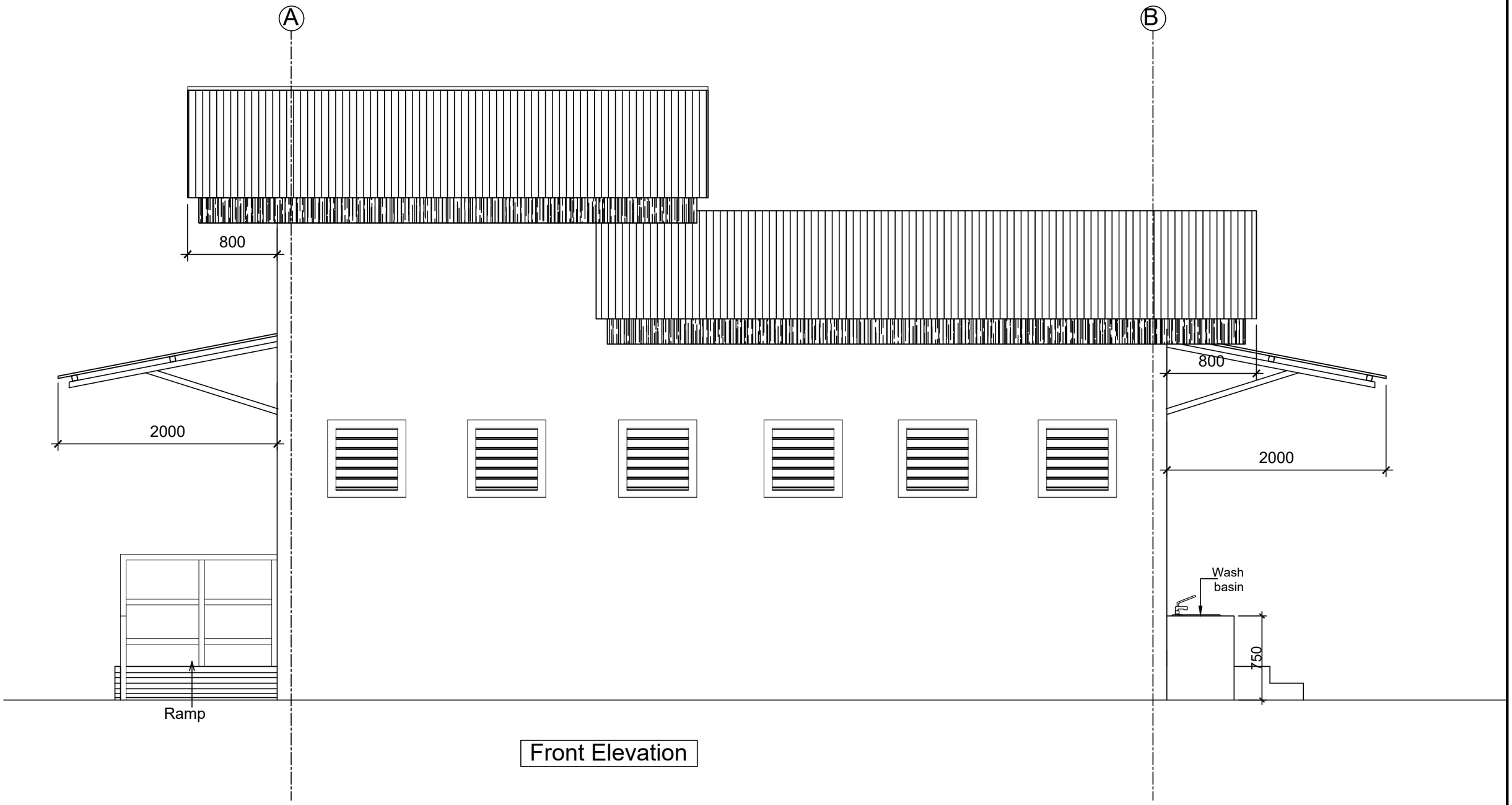

Front Elevation

ROYAL GOVERNMENT OF BHUTAN
MINISTRY OF INFRASTRUCTURE AND TRANSPORT

DEPARTMENT OF INFRASTRUCTURE DEVELOPMENT
INFRASTRUCTURE DESIGN DIVISION

Notes:
-All dimensions are in mm unless specified otherwise.
-All dimensions measure unfinished surfaces unless specified otherwise.
-All dimensions are to be read and not scaled off.
- Any discrepancies in drawings should immediately be brought to the notice of the design team

PROJECT TITLE:

TOILET FOR SCHOOLS - HPL (GIRLS-7 UNITS)

REV	DATE	DESCRIPTION
1	Jan/2025	1. Cubicle partitions changed to 18mm thick HPL boards. 2. Cubicle doors changed to 18mm thick HPL doors. 3. Granite flooring changed to anti-skid floor tiles. 4. Steel Gate changed to doors with WPC frame & PVC shutter. 5. WPC door shutter changed to PVC shutter. 6. Cement board ceilings (both internal & sofit) changed to PVC ceiling. 7. MS ceiling framing changed to Manufacturer's framing system for PVC ceiling. 8. Internal wall & ceiling finish changed to water-proof plastic paint. 9. Wall tiles included in the passage/corridor area and wash basin wall area. 10. Plinth protection & drain updated as per porch roof coverage.

DRAWING TITLE: FRONT ELEVATION

DESIGNED BY:	DRAWN BY:	CHECKED BY:	SCALE:
(TSHERING CHODEN) CHIEF ARCHITECT	(PEMA CHOZOM) ASST. ARCHITECT	(TSHERING CHODEN) CHIEF ARCHITECT	1 : 35
REVIEWED & APPROVED BY:	DATE:	DRAWING NO.	
(TSHERING CHODEN) CHIEF ARCHITECT	NOVEMBER/2023	TLT-HPL-7/ARC/05a	

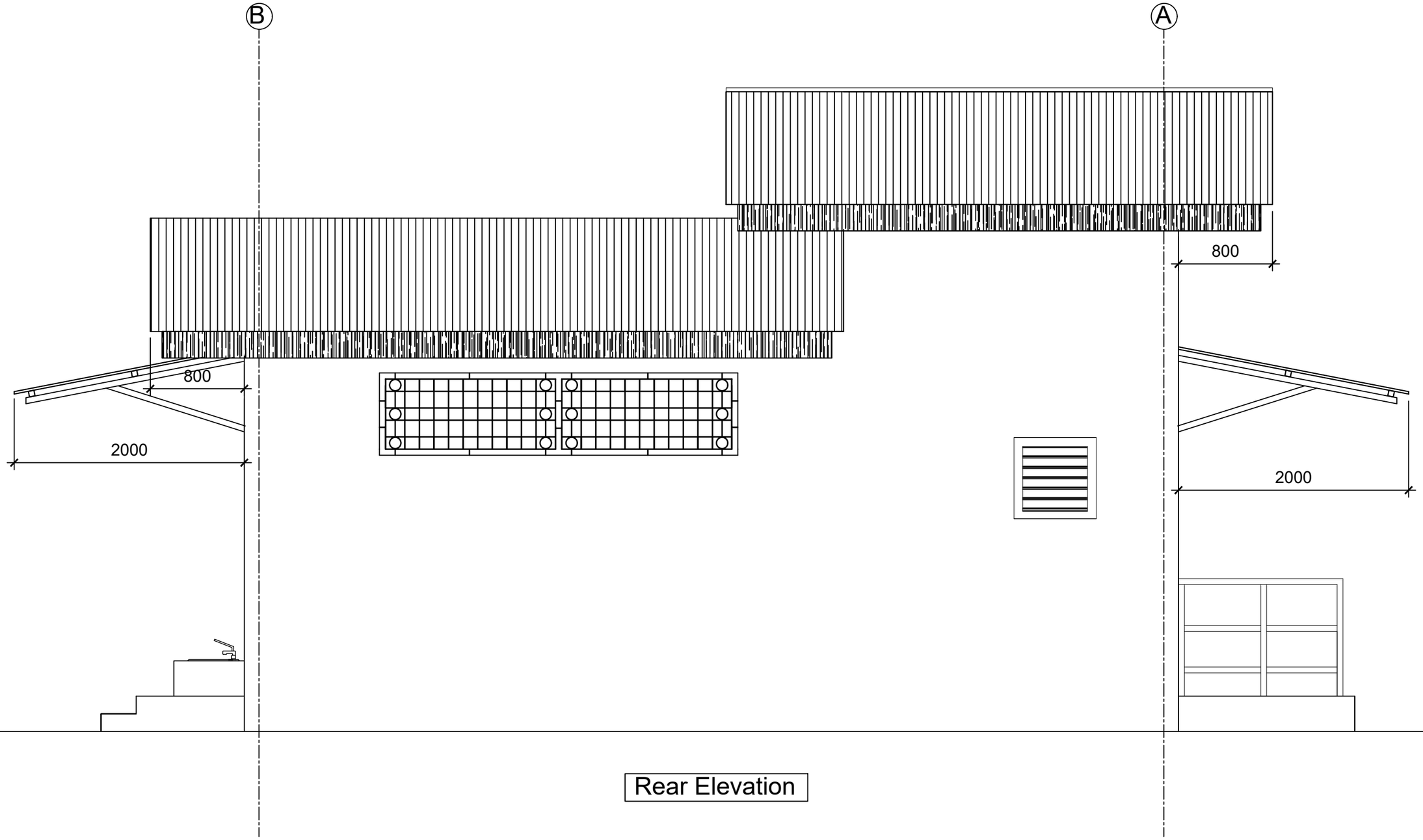

Rear Elevation

ROYAL GOVERNMENT OF BHUTAN
MINISTRY OF INFRASTRUCTURE AND TRANSPORT

DEPARTMENT OF INFRASTRUCTURE DEVELOPMENT
INFRASTRUCTURE DESIGN DIVISION

Notes:
-All dimensions are in mm unless specified otherwise.
-All dimensions measure unfinished surfaces unless specified otherwise.
-All dimensions are to be read and not scaled off.
- Any discrepancies in drawings should immediately be brought to the notice of the design team

PROJECT TITLE:

TOILET FOR SCHOOLS - HPL (GIRLS-7 UNITS)

REV	DATE	DESCRIPTION
1	Jan/2025	1. Cubicle partitions changed to 18mm thick HPL boards. 2. Cubicle doors changed to 18mm thick HPL doors. 3. Granite flooring changed to anti-skid floor tiles. 4. Steel Gate changed to doors with WPC frame & PVC shutter. 5. WPC door shutter changed to PVC shutter. 6. Cement board ceilings (both internal & sofit) changed to PVC ceiling. 7. MS ceiling framing changed to Manufacturer's framing system for PVC ceiling. 8. Internal wall & ceiling finish changed to water-proof plastic paint. 9. Wall tiles included in the passage/corridor area and wash basin wall area. 10. Plinth protection & drain updated as per porch roof coverage.

DRAWING TITLE: REAR ELEVATION

DESIGNED BY:	DRAWN BY:	CHECKED BY:	SCALE:
(TSHERING CHODEN) CHIEF ARCHITECT	(PEMA CHOZOM) ASST. ARCHITECT	(TSHERING CHODEN) CHIEF ARCHITECT	1 : 35
REVIEWED & APPROVED BY:	DATE:	DRAWING NO.	
(TSHERING CHODEN) CHIEF ARCHITECT	OCTOBER/2024	TLT-HPL-7/ARC/05b	

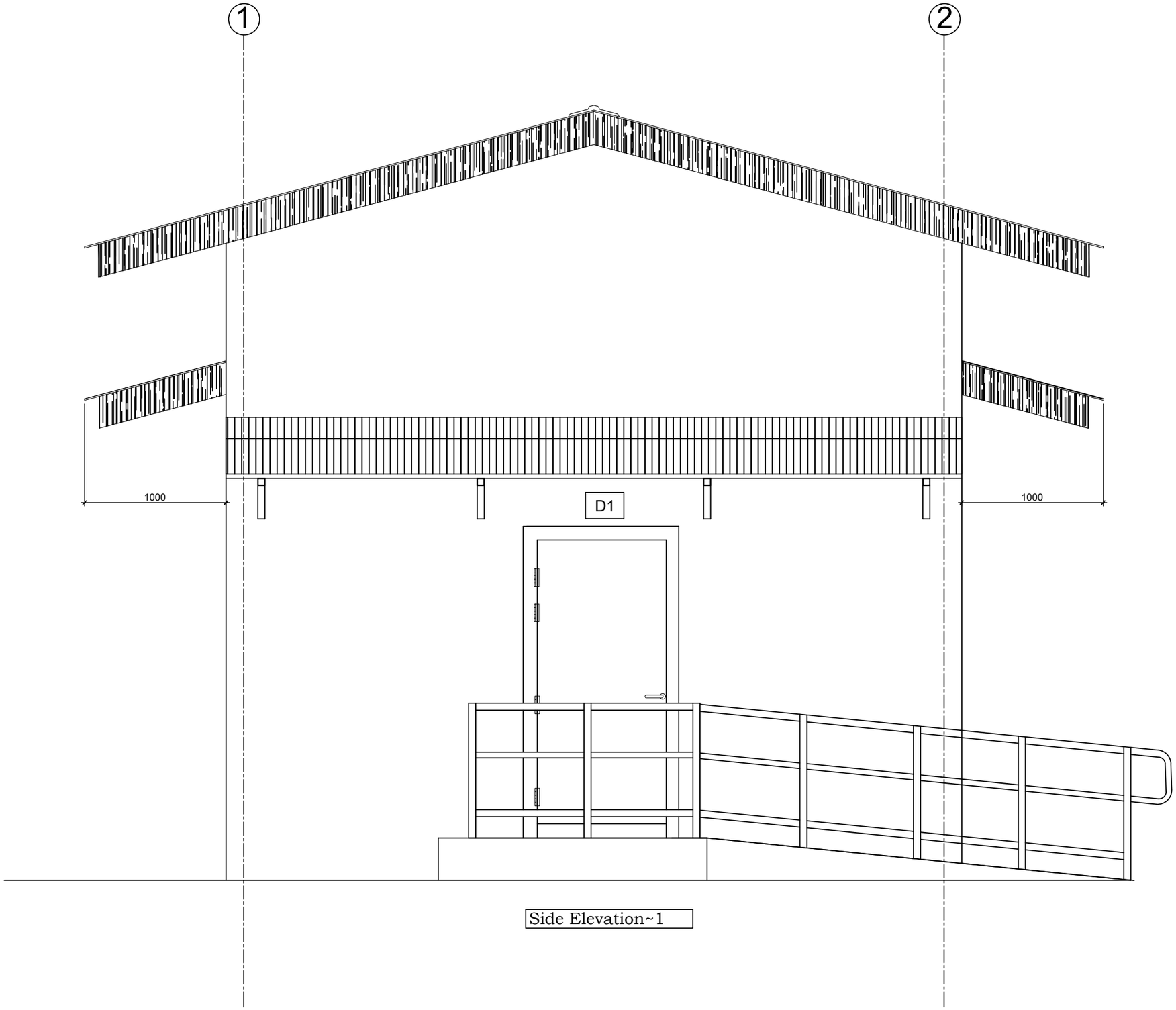

Side Elevation~1

ROYAL GOVERNMENT OF BHUTAN
MINISTRY OF INFRASTRUCTURE AND TRANSPORT

DEPARTMENT OF INFRASTRUCTURE DEVELOPMENT
INFRASTRUCTURE DESIGN DIVISION

Notes:
-All dimensions are in mm unless specified otherwise.
-All dimensions measure unfinished surfaces unless specified otherwise.
-All dimensions are to be read and not scaled off.
- Any discrepancies in drawings should immediately be brought to the notice of the design team

PROJECT TITLE:

TOILET FOR SCHOOLS - HPL (GIRLS-7 UNITS)

REV	DATE	DESCRIPTION
1	Jan/2025	1. Cubicle partitions changed to 18mm thick HPL boards. 2. Cubicle doors changed to 18mm thick HPL doors. 3. Granite flooring changed to anti-skid floor tiles. 4. Steel Gate changed to doors with WPC frame & PVC shutter. 5. WPC door shutter changed to PVC shutter. 6. Cement board ceilings (both internal & sofit) changed to PVC ceiling. 7. MS ceiling framing changed to Manufacturer's framing system for PVC ceiling. 8. Internal wall & ceiling finish changed to water-proof plastic paint. 9. Wall tiles included in the passage/corridor area and wash basin wall area. 10. Plinth protection & drain updated as per porch roof coverage.

DRAWING TITLE: SIDE ELEVATION -1

DESIGNED BY:	DRAWN BY:	CHECKED BY:	SCALE:
(TSHERING CHODEN) CHIEF ARCHITECT	(PEMA CHOZOM) ASST. ARCHITECT	(TSHERING CHODEN) CHIEF ARCHITECT	1 : 30
REVIEWED & APPROVED BY: (TSHERING CHODEN) CHIEF ARCHITECT	DATE: OCTOBER/2024	DRAWING NO. TLT-HPL-7/ARC/06a	

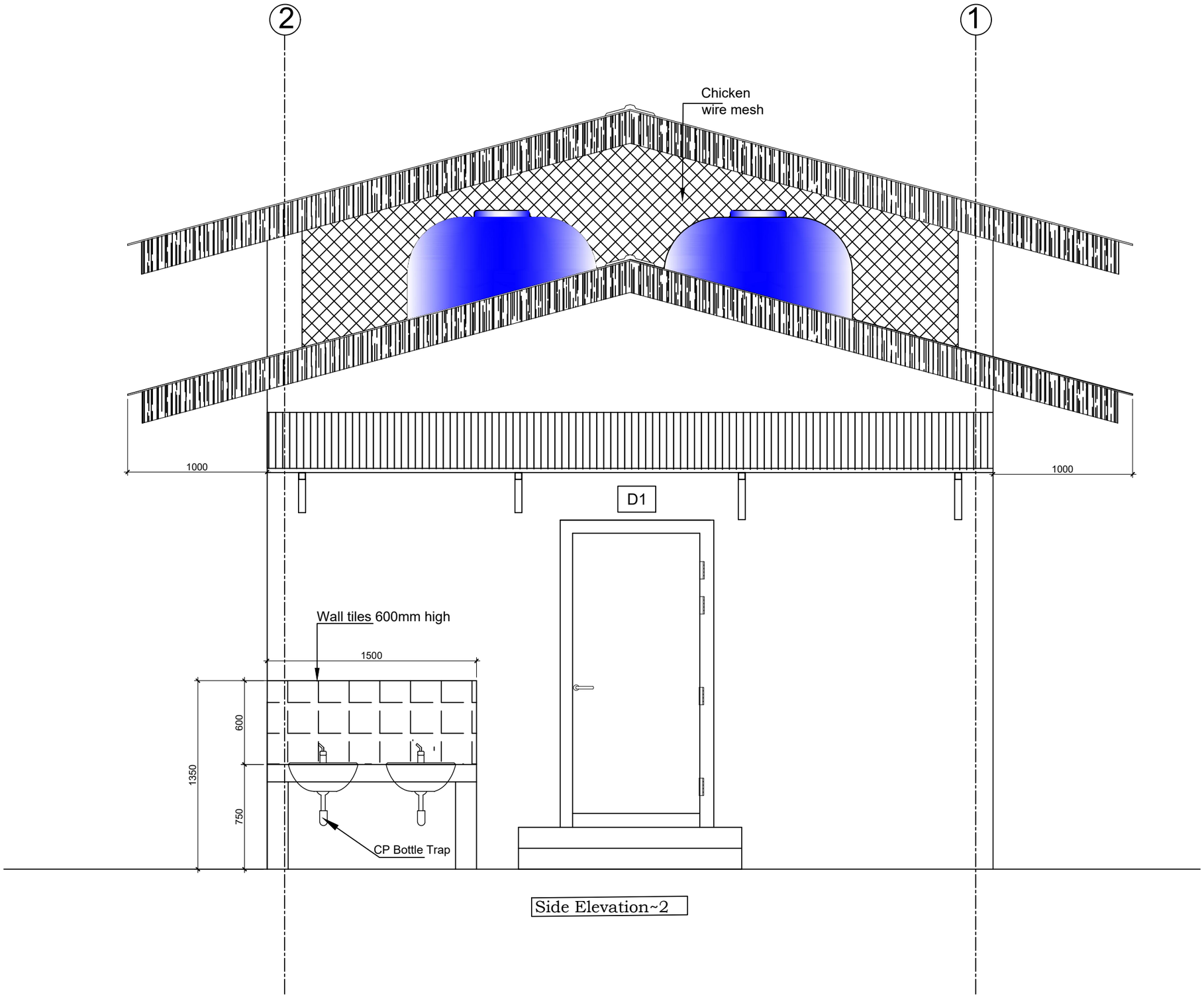

ROYAL GOVERNMENT OF BHUTAN
MINISTRY OF INFRASTRUCTURE AND TRANSPORT

DEPARTMENT OF INFRASTRUCTURE DEVELOPMENT
INFRASTRUCTURE DESIGN DIVISION

Notes:
-All dimensions are in mm unless specified otherwise.
-All dimensions measure unfinished surfaces unless specified otherwise.
-All dimensions are to be read and not scaled off.
- Any discrepancies in drawings should immediately be brought to the notice of the design team

PROJECT TITLE:

TOILET FOR SCHOOLS - HPL (GIRLS-7 UNITS)

REV	DATE	DESCRIPTION
1	Jan/2025	1. Cubicle partitions changed to 18mm thick HPL boards. 2. Cubicle doors changed to 18mm thick HPL doors. 3. Granite flooring changed to anti-skid floor tiles. 4. Steel Gate changed to doors with WPC frame & PVC shutter. 5. WPC door shutter changed to PVC shutter. 6. Cement board ceilings (both internal & soffit) changed to PVC ceiling. 7. MS ceiling framing changed to Manufacturer's framing system for PVC ceiling. 8. Internal wall & ceiling finish changed to water-proof plastic paint. 9. Wall tiles included in the passage/corridor area and wash basin wall area. 10. Plinth protection & drain updated as per porch roof coverage.

DRAWING TITLE: SIDE ELEVATION -2

DESIGNED BY:	DRAWN BY:	CHECKED BY:	SCALE:
(TSHERING CHODEN) CHIEF ARCHITECT	(PEMA CHOZOM) ASST. ARCHITECT	(TSHERING CHODEN) CHIEF ARCHITECT	1 : 30
REVIEWED & APPROVED BY:	DATE:	DRAWING NO.	
(TSHERING CHODEN) CHIEF ARCHITECT	NOVEMBER/2023	TLT-HPL-7/ARC/06b	

SAMPLE PARTITION
FOR CUBICLE

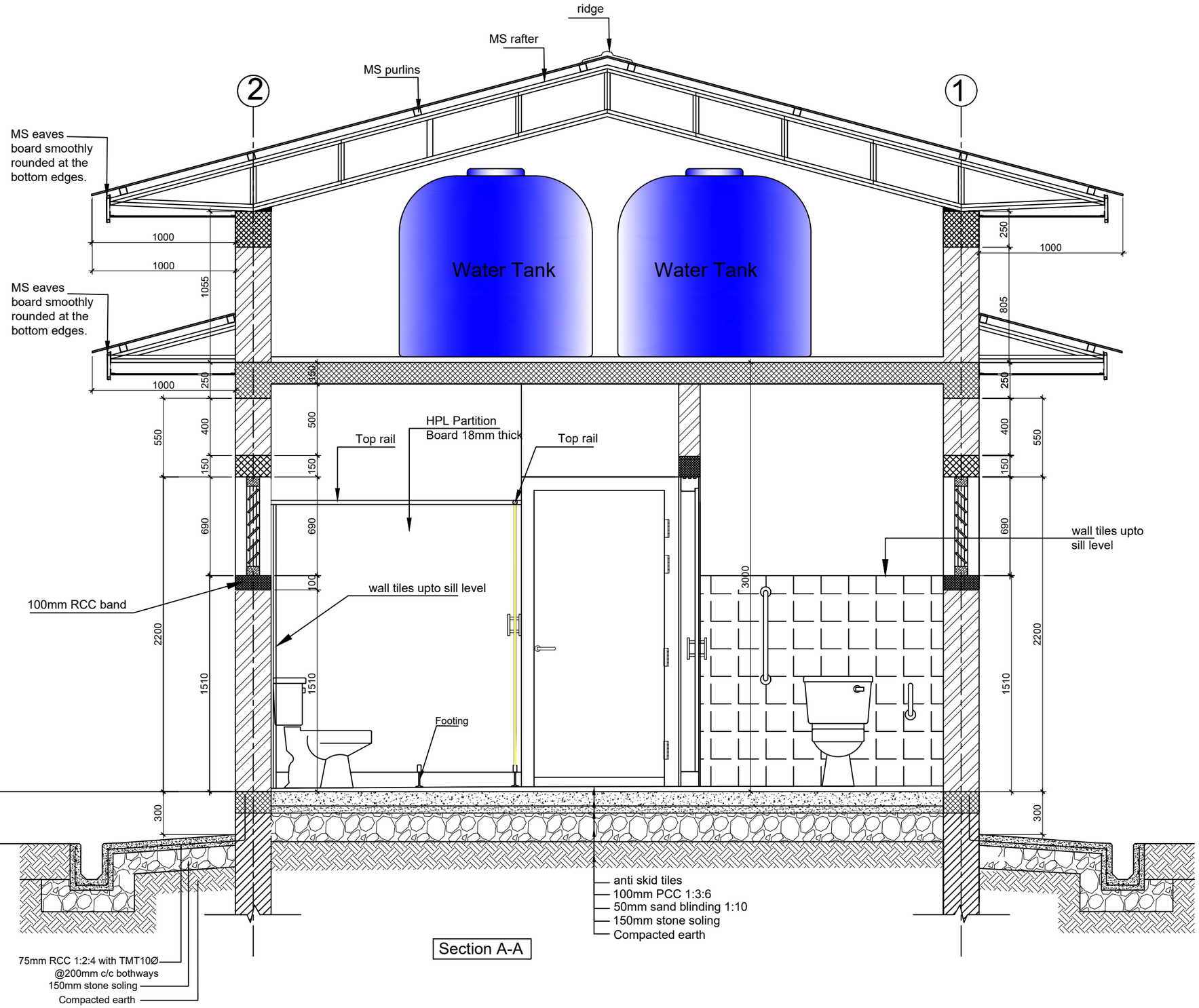

Section A-A

ROYAL GOVERNMENT OF BHUTAN
MINISTRY OF INFRASTRUCTURE AND TRANSPORT

DEPARTMENT OF INFRASTRUCTURE DEVELOPMENT
INFRASTRUCTURE DESIGN DIVISION

Notes:
-All dimensions are in mm unless specified otherwise.
-All dimensions measure unfinished surfaces unless specified otherwise.
-All dimensions are to be read and not scaled off.
- Any discrepancies in drawings should immediately be brought to the notice of the design team

PROJECT TITLE:

TOILET FOR SCHOOLS - HPL (GIRLS-7 UNITS)

REV	DATE	DESCRIPTION
1	Jan/2025	1. Cubicle partitions changed to 18mm thick HPL boards. 2. Cubicle doors changed to 18mm thick HPL doors. 3. Granite flooring changed to anti-skid floor tiles. 4. Steel Gate changed to doors with WPC frame & PVC shutter. 5. WPC door shutter changed to PVC shutter. 6. Cement board ceilings (both internal & sofit) changed to PVC ceiling. 7. MS ceiling framing changed to Manufacturer's framing system for PVC ceiling. 8. Internal wall & ceiling finish changed to water-proof plastic paint. 9. Wall tiles included in the passage/corridor area and wash basin wall area. 10. Plinth protection & drain updated as per porch roof coverage.

DRAWING TITLE: Section A-A

DESIGNED BY:	DRAWN BY:	CHECKED BY:	SCALE:
(TSHERING CHODEN) CHIEF ARCHITECT	(PEMA CHOZOM) ASST. ARCHITECT	(TSHERING CHODEN) CHIEF ARCHITECT	1 : 30
REVIEWED & APPROVED BY: (TSHERING CHODEN) CHIEF ARCHITECT	DATE: NOVEMBER/2023	DRAWING NO. TLT-HPL-7/ARC/07a	

SAMPLE PARTITION
FOR CUBICLE

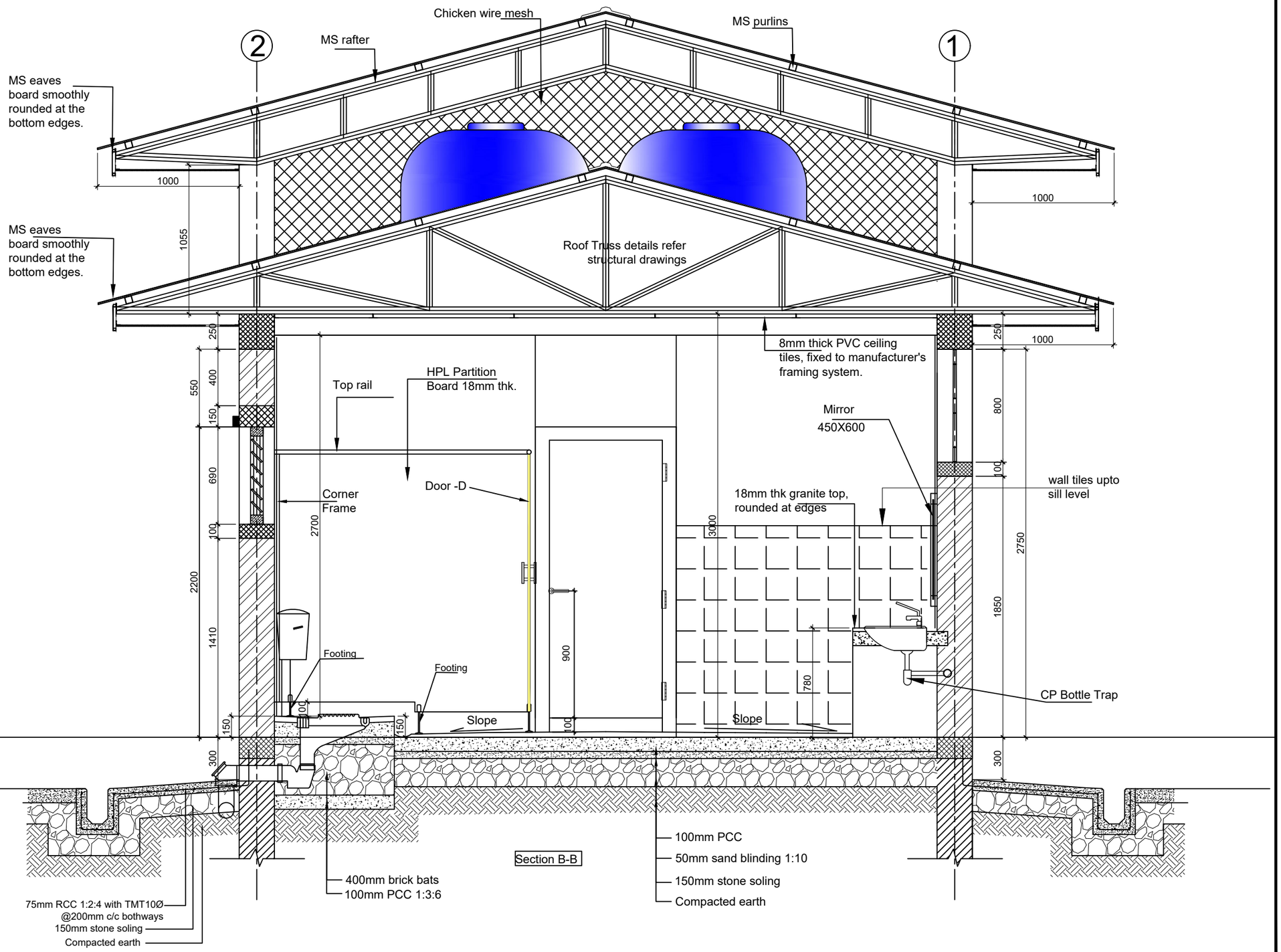

ROYAL GOVERNMENT OF BHUTAN
MINISTRY OF INFRASTRUCTURE AND TRANSPORT

DEPARTMENT OF INFRASTRUCTURE DEVELOPMENT
INFRASTRUCTURE DESIGN DIVISION

Notes:
-All dimensions are in mm unless specified otherwise.
-All dimensions measure unfinished surfaces unless specified otherwise.
-All dimensions are to be read and not scaled off.
- Any discrepancies in drawings should immediately be brought to the notice of the design team

PROJECT TITLE:

TOILET FOR SCHOOLS - HPL (GIRLS-7 UNITS)

REV	DATE	DESCRIPTION
1	Jan/2025	1. Cubicle partitions changed to 18mm thick HPL boards. 2. Cubicle doors changed to 18mm thick HPL doors. 3. Granite flooring changed to anti-skid floor tiles. 4. Steel Gate changed to doors with WPC frame & PVC shutter. 5. WPC door shutter changed to PVC shutter. 6. Cement board ceilings (both internal & sofit) changed to PVC ceiling. 7. MS ceiling framing changed to Manufacturer's framing system for PVC ceiling. 8. Internal wall & ceiling finish changed to water-proof plastic paint. 9. Wall tiles included in the passage/corridor area and wash basin wall area. 10. Plinth protection & drain updated as per porch roof coverage.

DRAWING TITLE: SECTION @ B-B

DESIGNED BY:	DRAWN BY:	CHECKED BY:	SCALE:
(TSHERING CHODEN) CHIEF ARCHITECT	(PEMA CHOZOM) ASST. ARCHITECT	(TSHERING CHODEN) CHIEF ARCHITECT	1 : 30
REVIEWED & APPROVED BY:	DATE:	DRAWING NO.	
(TSHERING CHODEN) CHIEF ARCHITECT	NOVEMBER/2023	TLT-HPL-7/ARC/07b	

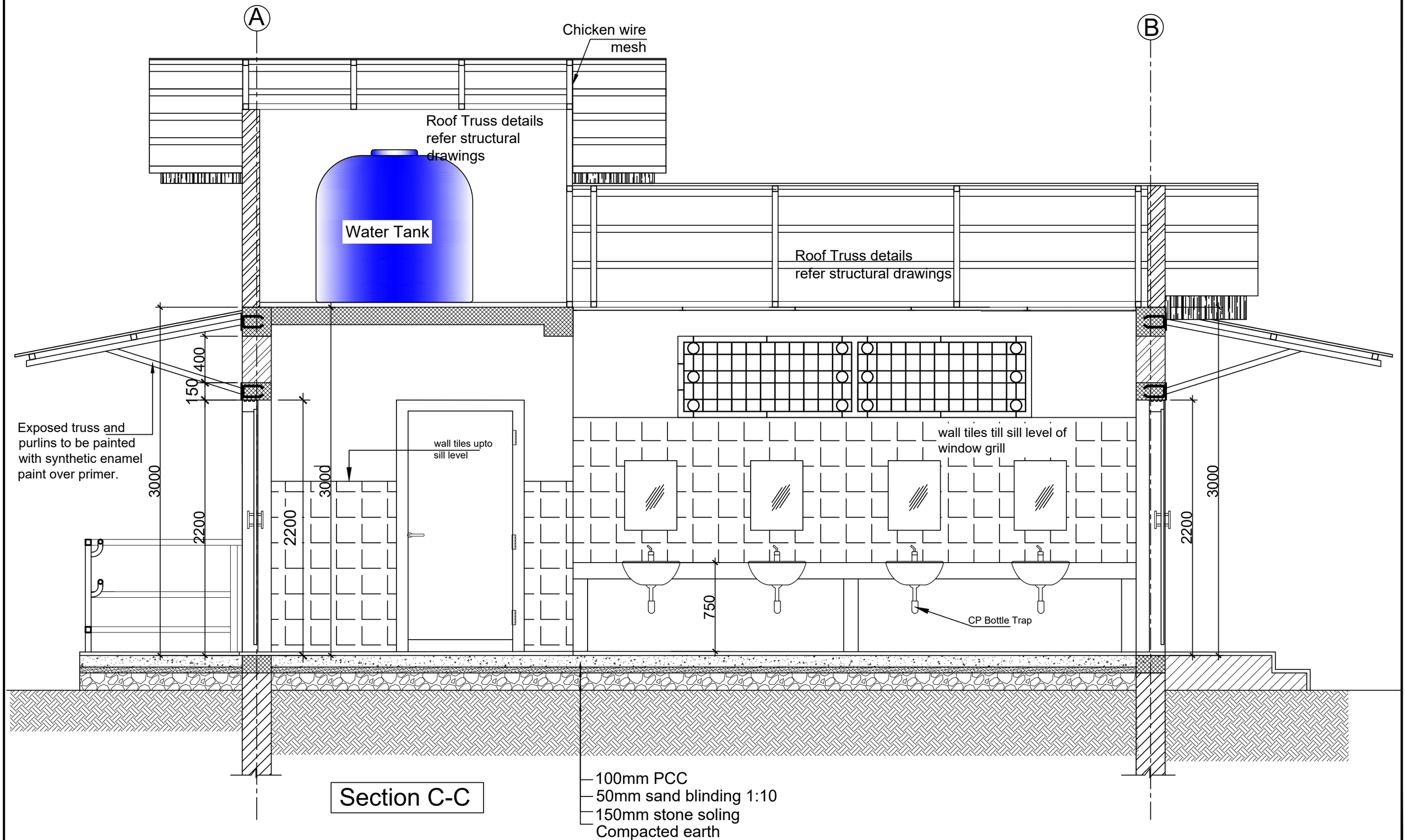

Section C-C

ROYAL GOVERNMENT OF BHUTAN
MINISTRY OF INFRASTRUCTURE AND TRANSPORT

DEPARTMENT OF INFRASTRUCTURE DEVELOPMENT
INFRASTRUCTURE DESIGN DIVISION

Notes:
-All dimensions are in mm unless specified otherwise.
-All dimensions measure unfinished surfaces unless specified otherwise.
-All dimensions are to be read and not scaled off.
- Any discrepancies in drawings should immediately be brought to the notice of the design team

PROJECT TITLE:

TOILET FOR SCHOOLS - HPL (GIRLS-7 UNITS)

REV	DATE	DESCRIPTION
1	Jan/2025	1. Cubicle partitions changed to 18mm thick HPL boards. 2. Cubicle doors changed to 18mm thick HPL doors. 3. Granite flooring changed to anti-skid floor tiles. 4. Steel Gate changed to doors with WPC frame & PVC shutter. 5. WPC door shutter changed to PVC shutter. 6. Cement board ceilings (both internal & sofit) changed to PVC ceiling. 7. MS ceiling framing changed to Manufacturer's framing system for PVC ceiling. 8. Internal wall & ceiling finish changed to water-proof plastic paint. 9. Wall tiles included in the passage/corridor area and wash basin wall area. 10. Plinth protection & drain updated as per porch roof coverage.

DRAWING TITLE: SECTION @ C-C

DESIGNED BY:	DRAWN BY:	CHECKED BY:	SCALE:
(TSHERING CHODEN) CHIEF ARCHITECT	(PEMA CHOZOM) ASST. ARCHITECT	(TSHERING CHODEN) CHIEF ARCHITECT	1 : 30
REVIEWED & APPROVED BY:	DATE:	DRAWING NO.	
(TSHERING CHODEN) CHIEF ARCHITECT	NOVEMBER/2023	TLT-HPL-7/ARC/07c	

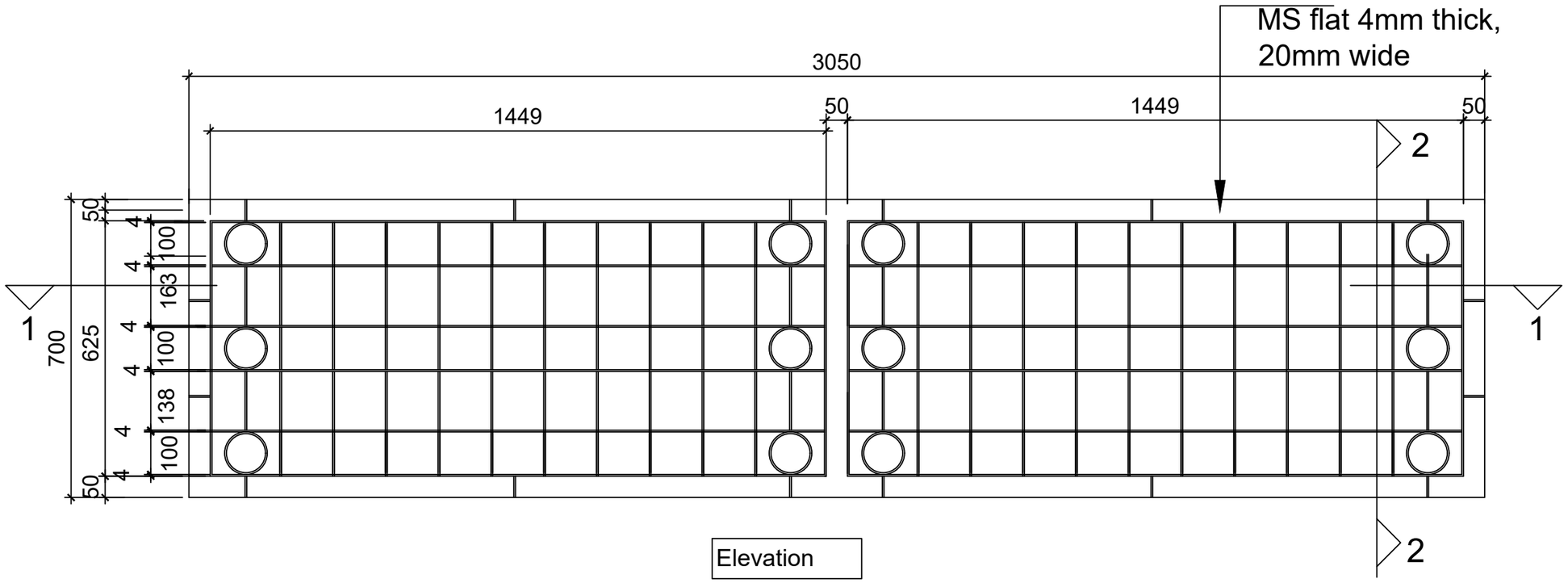

Elevation

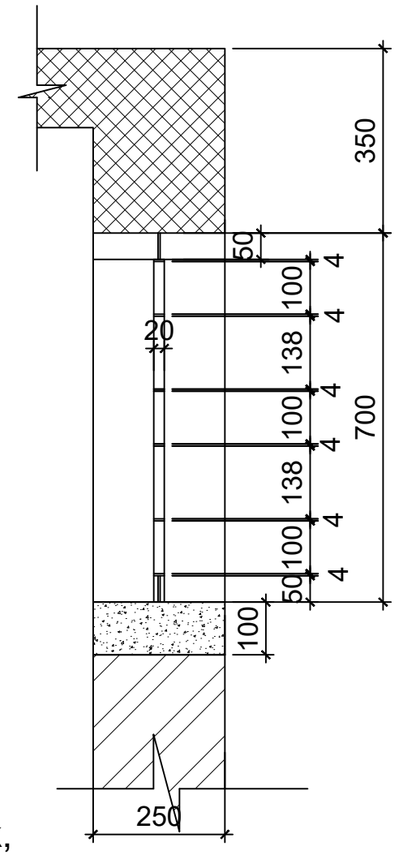

Section @ 2-2

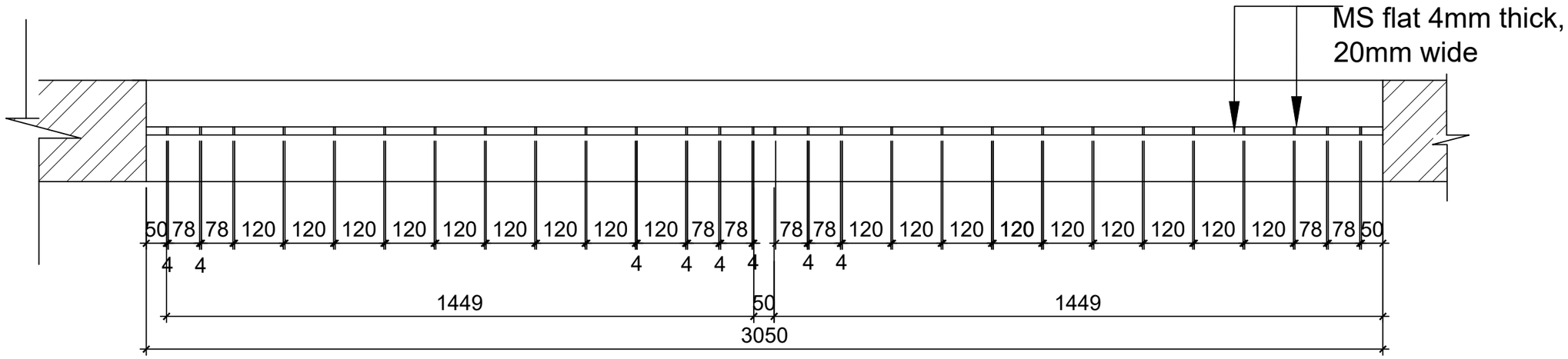

Plan @ 1-1

All members are of MS flat of 20x4mm thk.
All members shall be finished with 2 or more coats of synthetic enamel paint over red oxide primer.

ROYAL GOVERNMENT OF BHUTAN
MINISTRY OF INFRASTRUCTURE AND TRANSPORT

DEPARTMENT OF INFRASTRUCTURE DEVELOPMENT
INFRASTRUCTURE DESIGN DIVISION

Notes:
-All dimensions are in mm unless specified otherwise.
-All dimensions measure unfinished surfaces unless specified otherwise.
-All dimensions are to be read and not scaled off.
- Any discrepancies in drawings should immediately be brought to the notice of the design team

PROJECT TITLE:
TOILET FOR SCHOOLS - HPL
(GIRLS-7 UNITS)

REV	DATE	DESCRIPTION
1	Jan/2025	1. Cubicle partitions changed to 18mm thick HPL boards. 2. Cubicle doors changed to 18mm thick HPL doors. 3. Granite flooring changed to anti-skid floor tiles. 4. Steel Gate changed to doors with WPC frame & PVC shutter. 5. WPC door shutter changed to PVC shutter. 6. Cement board ceilings (both internal & soffit) changed to PVC ceiling. 7. MS ceiling framing changed to Manufacturer's framing system for PVC ceiling. 8. Internal wall & ceiling finish changed to water-proof plastic paint. 9. Wall tiles included in the passage/corridor area and wash basin wall area. 10. Plinth protection & drain updated as per porch roof coverage.

DRAWING TITLE: MS GRILL TYPE-G1

DESIGNED BY:	DRAWN BY:	CHECKED BY:	SCALE:
(TSHERING CHODEN) CHIEF ARCHITECT	(PEMA CHOZOM) ASST. ARCHITECT	(TSHERING CHODEN) CHIEF ARCHITECT	nts

REVIEWED & APPROVED BY:	DATE:	DRAWING NO.
(TSHERING CHODEN) CHIEF ARCHITECT	OCTOBER/2024	TLT-HPL-7/ARC/08

VENTILATOR V1

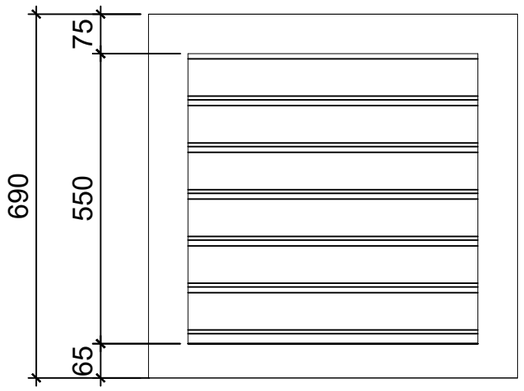

ELEVATION

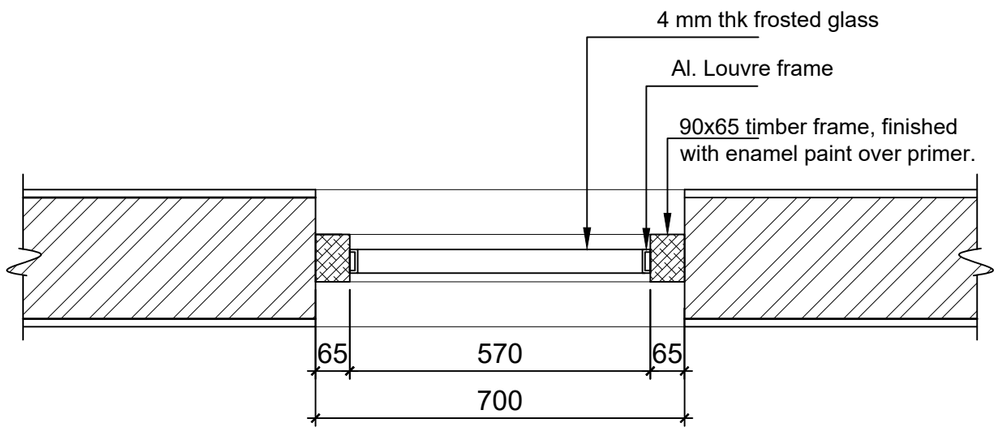

PLAN

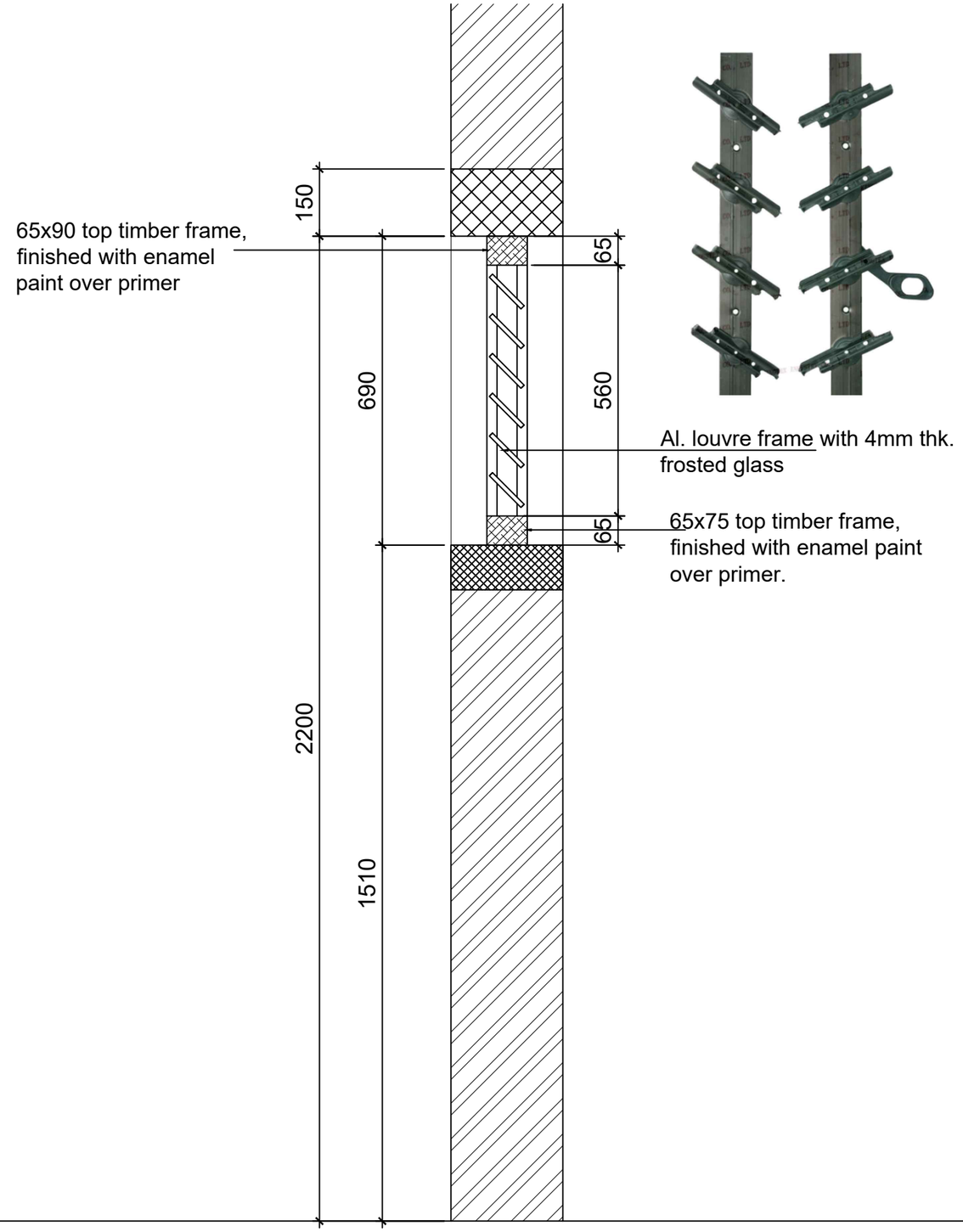

SECTION

ROYAL GOVERNMENT OF BHUTAN
MINISTRY OF INFRASTRUCTURE AND TRANSPORT

DEPARTMENT OF INFRASTRUCTURE DEVELOPMENT
INFRASTRUCTURE DESIGN DIVISION

Notes:
-All dimensions are in mm unless specified otherwise.
-All dimensions measure unfinished surfaces unless specified otherwise.
-All dimensions are to be read and not scaled off.
- Any discrepancies in drawings should immediately be brought to the notice of the design team

PROJECT TITLE:
TOILET FOR SCHOOLS - HPL (GIRLS-7 UNITS)

REV	DATE	DESCRIPTION
1	Jan/2025	1. Cubicle partitions changed to 18mm thick HPL boards. 2. Cubicle doors changed to 18mm thick HPL doors. 3. Granite flooring changed to anti-skid floor tiles. 4. Steel Gate changed to doors with WPC frame & PVC shutter. 5. WPC door shutter changed to PVC shutter. 6. Cement board ceilings (both internal & soffit) changed to PVC ceiling. 7. MS ceiling framing changed to Manufacturer's framing system for PVC ceiling. 8. Internal wall & ceiling finish changed to water-proof plastic paint. 9. Wall tiles included in the passage/corridor area and wash basin wall area. 10. Plinth protection & drain updated as per porch roof coverage.

DRAWING TITLE: VENTILATION - V1

DESIGNED BY:	DRAWN BY:	CHECKED BY:	SCALE:
(TSHERING CHODEN) CHIEF ARCHITECT	(PEMA CHOZOM) ASST. ARCHITECT	(TSHERING CHODEN) CHIEF ARCHITECT	nts
REVIEWED & APPROVED BY:	DATE:	DRAWING NO.	
(TSHERING CHODEN) CHIEF ARCHITECT	OCTOBER/2024	TLT-HPL-7/ARC/09	

Door Detail D1

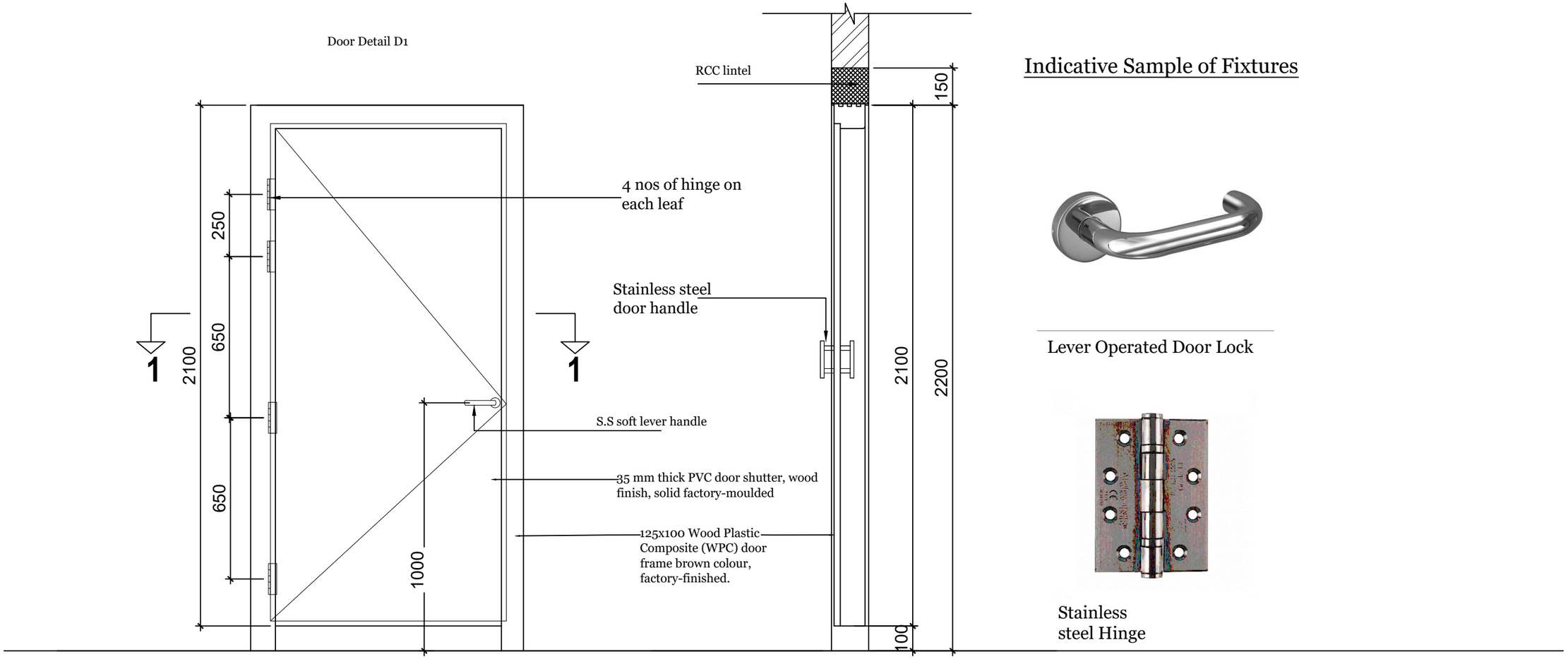

ELEVATION

SECTION

Indicative Sample of Fixtures

Lever Operated Door Lock

Stainless steel Hinge

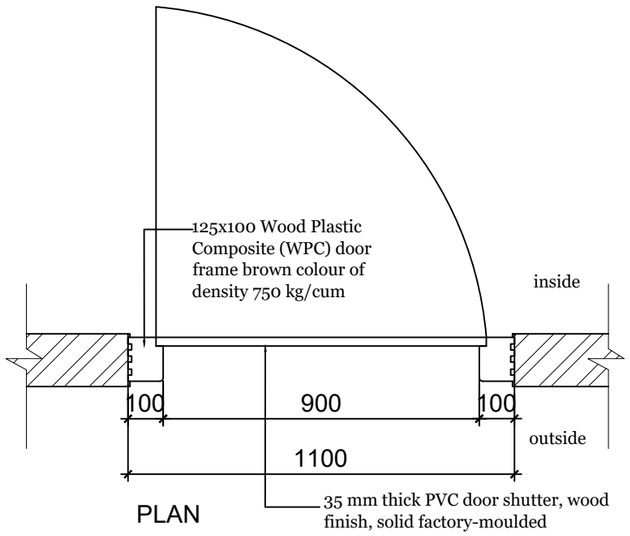

PLAN

Notes:

- 125mm Stainless steel hinge - 4 nos.for each leaf
- Stainless steel soft lever handle - 1 set
- 4 nos of MS hold fast shall be provided for each door frame.
- Sample of fixtures to be approved by the implementing agency prior to fixing.
-The density of the WPC door is 750 kg/cubic meter

ROYAL GOVERNMENT OF BHUTAN
MINISTRY OF INFRASTRUCTURE AND TRANSPORT

DEPARTMENT OF INFRASTRUCTURE DEVELOPMENT
INFRASTRUCTURE DESIGN DIVISION

Notes:
-All dimensions are in mm unless specified otherwise.
-All dimensions measure unfinished surfaces unless specified otherwise.
-All dimensions are to be read and not scaled off.
- Any discrepancies in drawings should immediately be brought to the notice of the design team

PROJECT TITLE:
TOILET FOR SCHOOLS -HPL (GIRLS-7 UNITS)

REV	DATE	DESCRIPTION
1	Jan/2025	1. Cubicle partitions changed to 18mm thick HPL boards. 2. Cubicle doors changed to 18mm thick HPL doors. 3. Granite flooring changed to anti-skid floor tiles. 4. Steel Gate changed to doors with WPC frame & PVC shutter. 5. WPC door shutter changed to PVC shutter. 6. Cement board ceilings (both internal & sofit) changed to PVC ceiling. 7. MS ceiling framing changed to Manufacturer's framing system for PVC ceiling. 8. Internal wall & ceiling finish changed to water-proof plastic paint. 9. Wall tiles included in the passage/corridor area and wash basin wall area. 10. Plinth protection & drain updated as per porch roof coverage.

DRAWING TITLE: DOOR DETAILS-D1

DESIGNED BY:	DRAWN BY:	CHECKED BY:	SCALE:
(TSHERING CHODEN) CHIEF ARCHITECT	(PEMA CHOZOM) ASST. ARCHITECT	(TSHERING CHODEN) CHIEF ARCHITECT	nts
REVIEWED & APPROVED BY:	DATE:	DRAWING NO.	
(TSHERING CHODEN) CHIEF ARCHITECT	OCTOBER/2024	TLT-HPL-7/ARC/10	

Door Detail -D

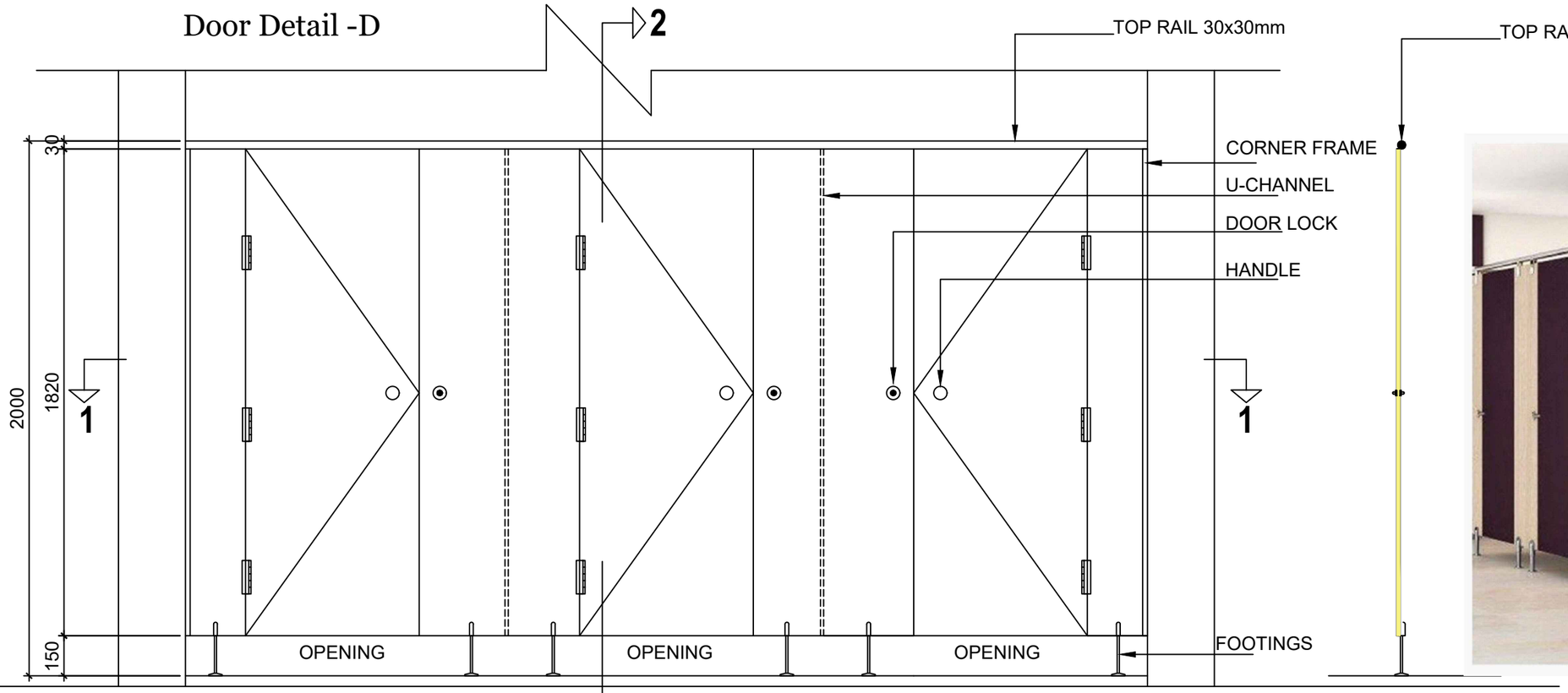

ELEVATION

SECTION @ 2

SAMPLE DOOR

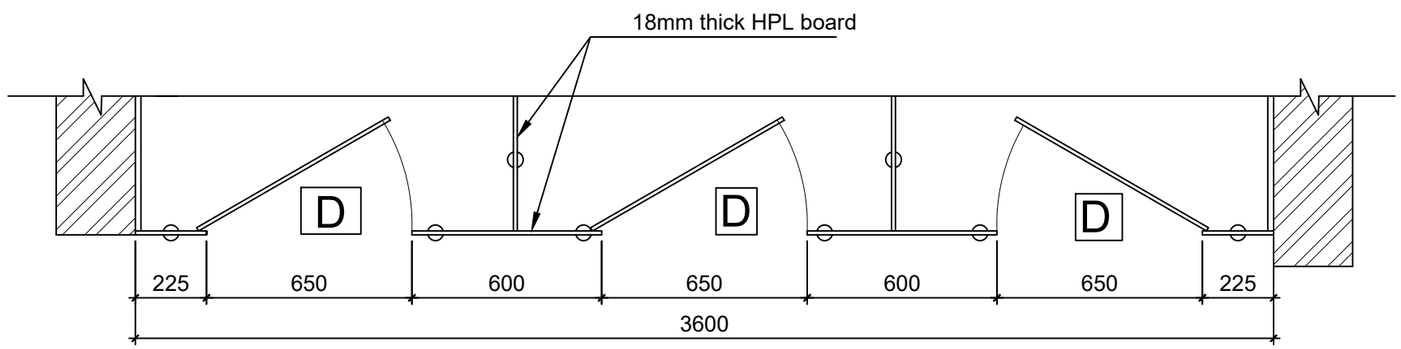

PLAN @ 1

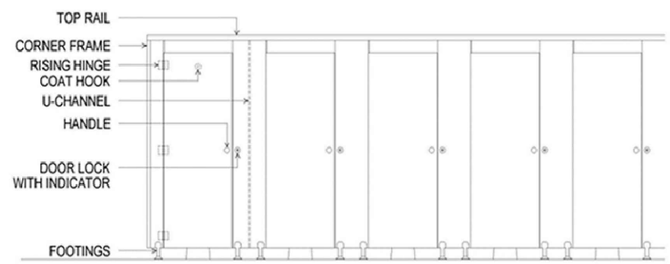

SAMPLE DOOR

ROYAL GOVERNMENT OF BHUTAN
MINISTRY OF INFRASTRUCTURE AND TRANSPORT

DEPARTMENT OF INFRASTRUCTURE DEVELOPMENT
INFRASTRUCTURE DESIGN DIVISION

Notes:
-All dimensions are in mm unless specified otherwise.
-All dimensions measure unfinished surfaces unless specified otherwise.
-All dimensions are to be read and not scaled off.
- Any discrepancies in drawings should immediately be brought to the notice of the design team

PROJECT TITLE:
TOILET FOR SCHOOLS -HPL
(GIRLS-7 UNITS)

REV	DATE	DESCRIPTION
1	Jan/2025	1. Cubicle partitions changed to 18mm thick HPL boards. 2. Cubicle doors changed to 18mm thick HPL doors. 3. Granite flooring changed to anti-skid floor tiles. 4. Steel Gate changed to doors with WPC frame & PVC shutter. 5. WPC door shutter changed to PVC shutter. 6. Cement board ceilings (both internal & sofit) changed to PVC ceiling. 7. MS ceiling framing changed to Manufacturer's framing system for PVC ceiling. 8. Internal wall & ceiling finish changed to water-proof plastic paint. 9. Wall tiles included in the passage/corridor area and wash basin wall area. 10. Plinth protection & drain updated as per porch roof coverage.

DRAWING TITLE: DOOR DETAIL -D

DESIGNED BY:	DRAWN BY:	CHECKED BY:	SCALE:
(TSHERING CHODEN) CHIEF ARCHITECT	(PEMA CHOZOM) ASST. ARCHITECT	(TSHERING CHODEN) CHIEF ARCHITECT	1:20
REVIEWED & APPROVED BY:	DATE:	DRAWING NO.	
(TSHERING CHODEN) CHIEF ARCHITECT	NOVEMBER/2023	TLT-HPL-7/ARC/11	

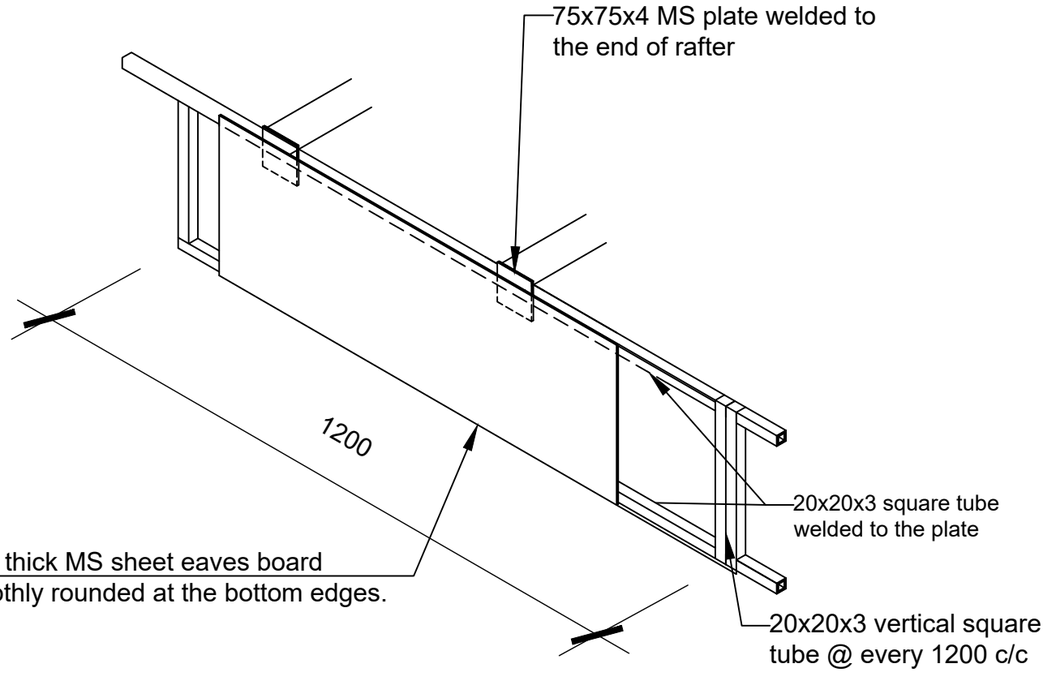

***Eaves board shall be assembled
as frames of 1200mm length

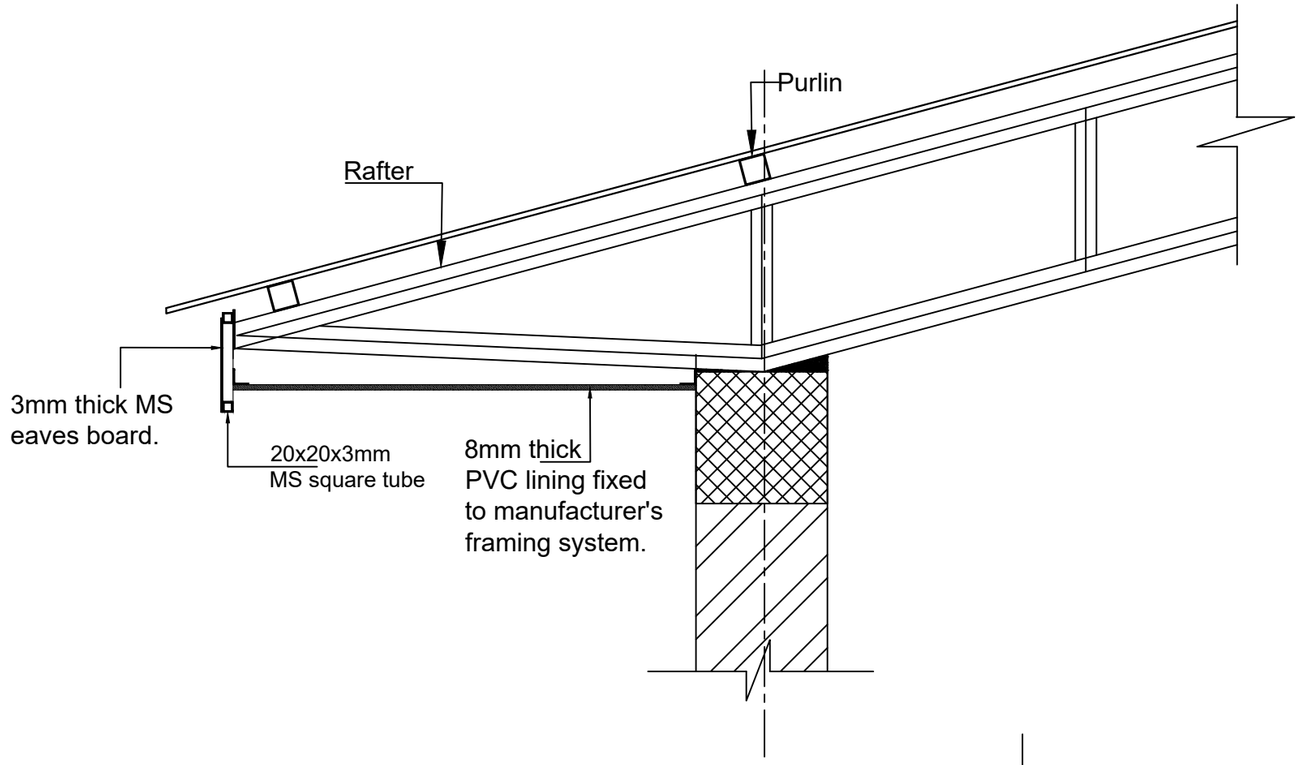

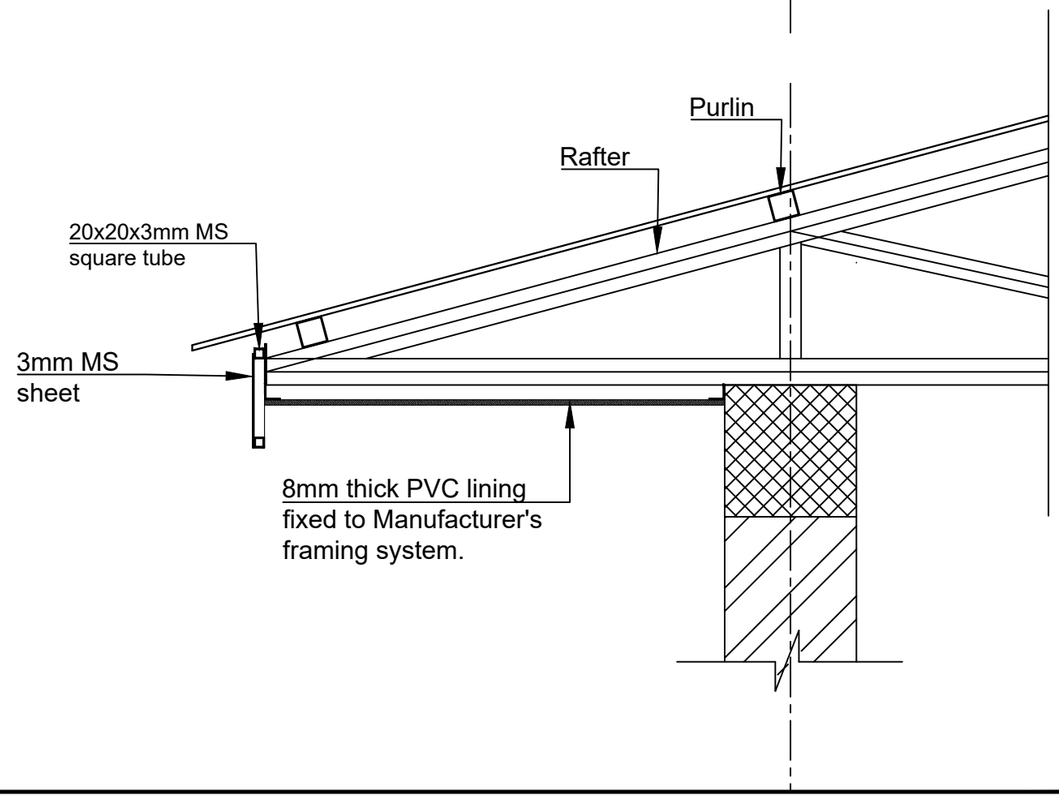

ROYAL GOVERNMENT OF BHUTAN
MINISTRY OF INFRASTRUCTURE AND TRANSPORT

DEPARTMENT OF INFRASTRUCTURE DEVELOPMENT
INFRASTRUCTURE DESIGN DIVISION

Notes:
-All dimensions are in mm unless specified otherwise.
-All dimensions measure unfinished surfaces unless specified otherwise.
-All dimensions are to be read and not scaled off.
- Any discrepancies in drawings should immediately be brought to the notice of the design team

PROJECT TITLE:
TOILET FOR SCHOOLS-HPL
(GIRLS-7 UNITS)

REV	DATE	DESCRIPTION
1	Jan/2025	1. Cubicle partitions changed to 18mm thick HPL boards. 2. Cubicle doors changed to 18mm thick HPL doors. 3. Granite flooring changed to anti-skid floor tiles. 4. Steel Gate changed to doors with WPC frame & PVC shutter. 5. WPC door shutter changed to PVC shutter. 6. Cement board ceilings (both internal & sofit) changed to PVC ceiling. 7. MS ceiling framing changed to Manufacturer's framing system for PVC ceiling. 8. Internal wall & ceiling finish changed to water-proof plastic paint. 9. Wall tiles included in the passage/corridor area and wash basin wall area. 10. Plinth protection & drain updated as per porch roof coverage.

DRAWING TITLE: TYPICAL EAVES BOARD & SOFIT DETAILS

DESIGNED BY:	DRAWN BY:	CHECKED BY:	SCALE:
(TSHERING CHODEN) CHIEF ARCHITECT	(PEMA CHOZOM) ASST. ARCHITECT	(TSHERING CHODEN) CHIEF ARCHITECT	nts
REVIEWED & APPROVED BY:	DATE:	DRAWING NO.	
(TSHERING CHODEN) CHIEF ARCHITECT	OCTOBER/2024	TLT-HPL-7/ARC/12	

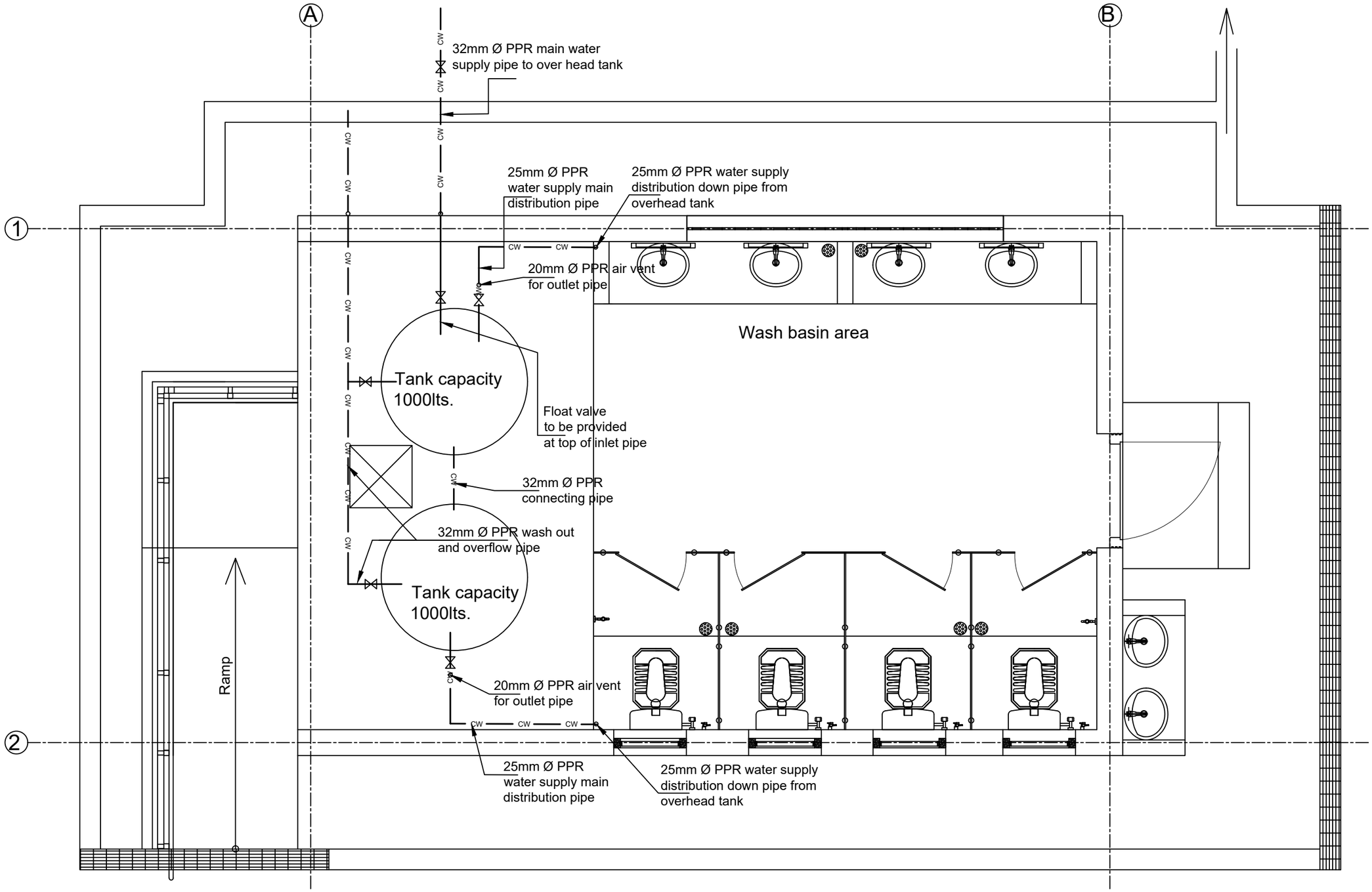

Water supply distribution pipe layout Plan at Tank area

ROYAL GOVERNMENT OF BHUTAN
MINISTRY OF INFRASTRUCTURE AND TRANSPORT

DEPARTMENT OF INFRASTRUCTURE DEVELOPMENT
INFRASTRUCTURE DESIGN DIVISION

Notes:
-All dimensions are in mm unless specified otherwise.
-All dimensions measure unfinished surfaces unless specified otherwise.
-All dimensions are to be read and not scaled off.
- Any discrepancies in drawings should immediately be brought to the notice of the design team

PROJECT TITLE:
TOILET FOR SCHOOLS-HPL (GIRLS-7 UNITS)

REV	DATE	DESCRIPTION
1	Jan/2025	1. Cubicle partitions changed to 18mm thick HPL boards. 2. Cubicle doors changed to 18mm thick HPL doors. 3. Granite flooring changed to anti-skid floor tiles. 4. Steel Gate changed to doors with WPC frame & PVC shutter. 5. WPC door shutter changed to PVC shutter. 6. Cement board ceilings (both internal & sofit) changed to PVC ceiling. 7. MS ceiling framing changed to Manufacturer's framing system for PVC ceiling. 8. Internal wall & ceiling finish changed to water-proof plastic paint. 9. Wall tiles included in the passage/corridor area and wash basin wall area. 10. Plinth protection & drain updated as per porch roof coverage.

DRAWING TITLE: WATER SUPPLY DISTRIBUTIONS LAYOUT PLAN AT TANK AREA

DESIGNED BY:	DRAWN BY:	CHECKED BY:	SCALE:
(TSHERING CHODEN) CHIEF ARCHITECT	(PEMA CHOZOM) ASST. ARCHITECT	(TSHERING CHODEN) CHIEF ARCHITECT	NTS
REVIEWED & APPROVED BY:	DATE:	DRAWING NO.	
(TSHERING CHODEN) CHIEF ARCHITECT	OCTOBER/2024	TLT-HPL-7/ARC/13a	

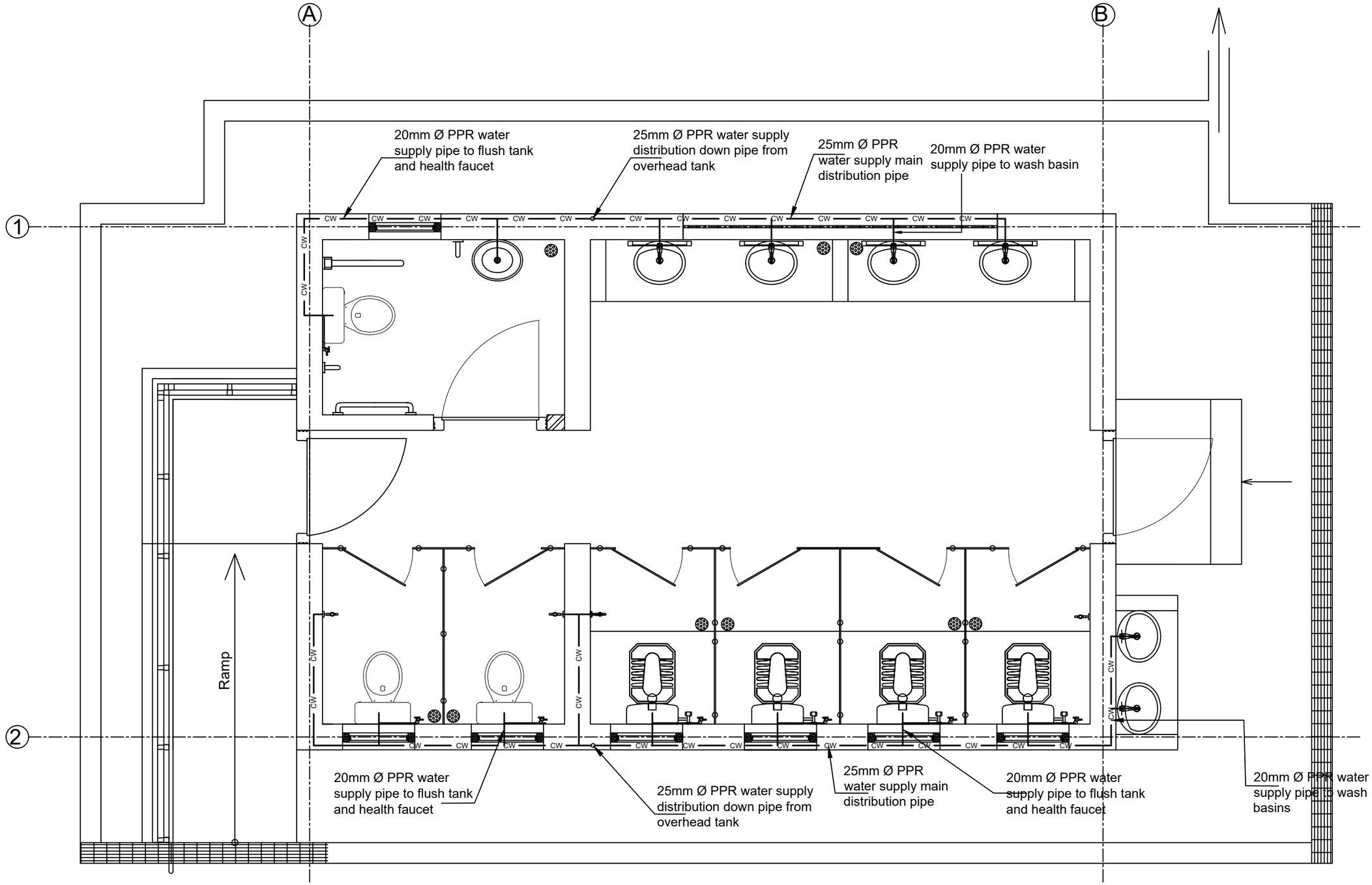

Water supply pipe

Plan for (Girls)

ROYAL GOVERNMENT OF BHUTAN
MINISTRY OF INFRASTRUCTURE AND TRANSPORT

DEPARTMENT OF INFRASTRUCTURE DEVELOPMENT
INFRASTRUCTURE DESIGN DIVISION

Notes:
-All dimensions are in mm unless specified otherwise.
-All dimensions measure unfinished surfaces unless specified otherwise.
-All dimensions are to be read and not scaled off.
- Any discrepancies in drawings should immediately be brought to the notice of the design team

PROJECT TITLE:

TOILET FOR SCHOOLS -HPL (GIRLS-7 UNITS)

REV	DATE	DESCRIPTION
1	Jan/2025	1. Cubicle partitions changed to 18mm thick HPL boards. 2. Cubicle doors changed to 18mm thick HPL doors. 3. Granite flooring changed to anti-skid floor tiles. 4. Steel Gate changed to doors with WPC frame & PVC shutter. 5. WPC door shutter changed to PVC shutter. 6. Cement board ceilings (both internal & sofit) changed to PVC ceiling. 7. MS ceiling framing changed to Manufacturer's framing system for PVC ceiling. 8. Internal wall & ceiling finish changed to water-proof plastic paint. 9. Wall tiles included in the passage/corridor area and wash basin wall area. 10. Plinth protection & drain updated as per porch roof coverage.

DRAWING TITLE: WATER SUPPLY PIPE LAYOUT PLAN

DESIGNED BY:	DRAWN BY:	CHECKED BY:	SCALE:
(TSHERING CHODEN) CHIEF ARCHITECT	(PEMA CHOZOM) ASST. ARCHITECT	(TSHERING CHODEN) CHIEF ARCHITECT	NTS
REVIEWED & APPROVED BY: (TSHERING CHODEN) CHIEF ARCHITECT	DATE: OCTOBER/2024	DRAWING NO. TLT-HPL-7/ARC/13b	

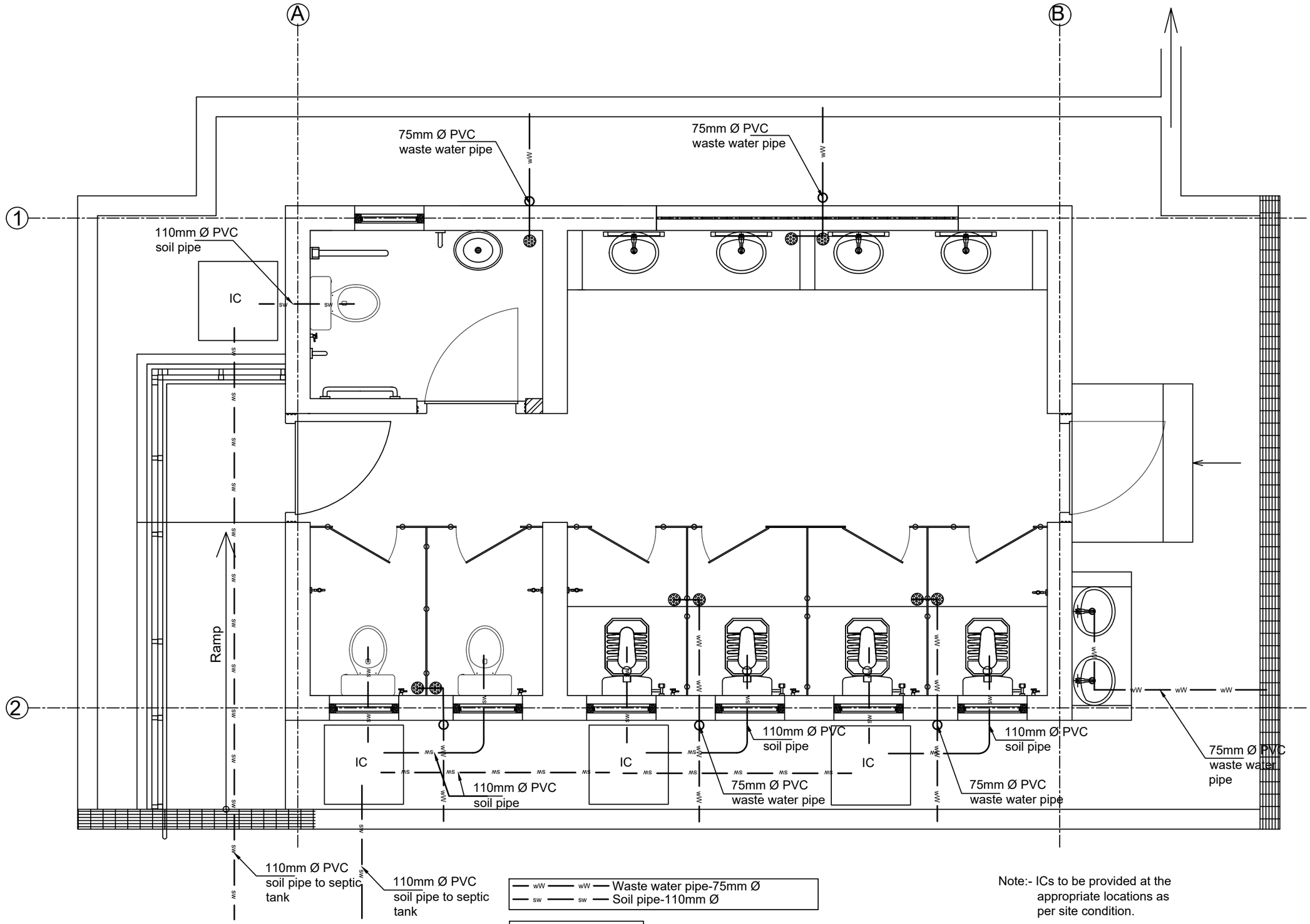

wW — wW — Waste water pipe-75mm Ø
sw — sw — Soil pipe-110mm Ø

Note:- ICs to be provided at the appropriate locations as per site condition.

Plan for (Girls)

ROYAL GOVERNMENT OF BHUTAN
MINISTRY OF INFRASTRUCTURE AND TRANSPORT

DEPARTMENT OF INFRASTRUCTURE DEVELOPMENT
INFRASTRUCTURE DESIGN DIVISION

Notes:
-All dimensions are in mm unless specified otherwise.
-All dimensions measure unfinished surfaces unless specified otherwise.
-All dimensions are to be read and not scaled off.
- Any discrepancies in drawings should immediately be brought to the notice of the design team

PROJECT TITLE:

TOILET FOR SCHOOLS - HPL (GIRLS-7 UNITS)

REV	DATE	DESCRIPTION
1	Jan/2025	1. Cubicle partitions changed to 18mm thick HPL boards. 2. Cubicle doors changed to 18mm thick HPL doors. 3. Granite flooring changed to anti-skid floor tiles. 4. Steel Gate changed to doors with WPC frame & PVC shutter. 5. WPC door shutter changed to PVC shutter. 6. Cement board ceilings (both internal & sofit) changed to PVC ceiling. 7. MS ceiling framing changed to Manufacturer's framing system for PVC ceiling. 8. Internal wall & ceiling finish changed to water-proof plastic paint. 9. Wall tiles included in the passage/corridor area and wash basin wall area. 10. Plinth protection & drain updated as per porch roof coverage.

DRAWING TITLE: Waste Water and Soil Pipe Layout Plan

DESIGNED BY:	DRAWN BY:	CHECKED BY:	SCALE:
(TSHERING CHODEN) CHIEF ARCHITECT	(PEMA CHOZOM) ASST. ARCHITECT	(TSHERING CHODEN) CHIEF ARCHITECT	NTS
REVIEWED & APPROVED BY:	DATE:	DRAWING NO.	
(TSHERING CHODEN) CHIEF ARCHITECT	OCTOBER/2024	TLT-HPL-7/ARC/14	

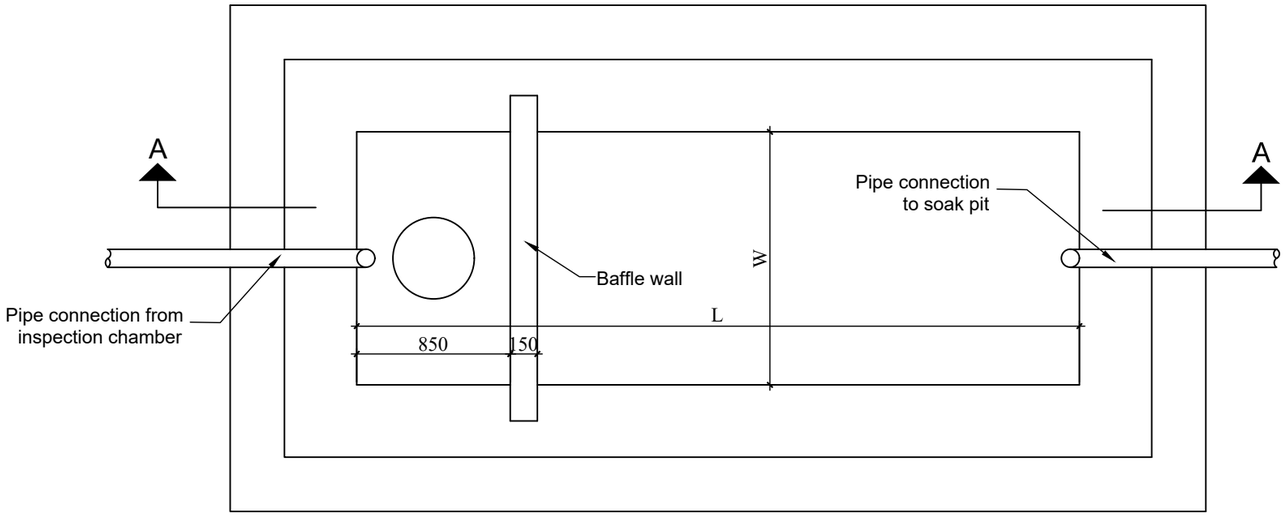

Septic Tank Plan

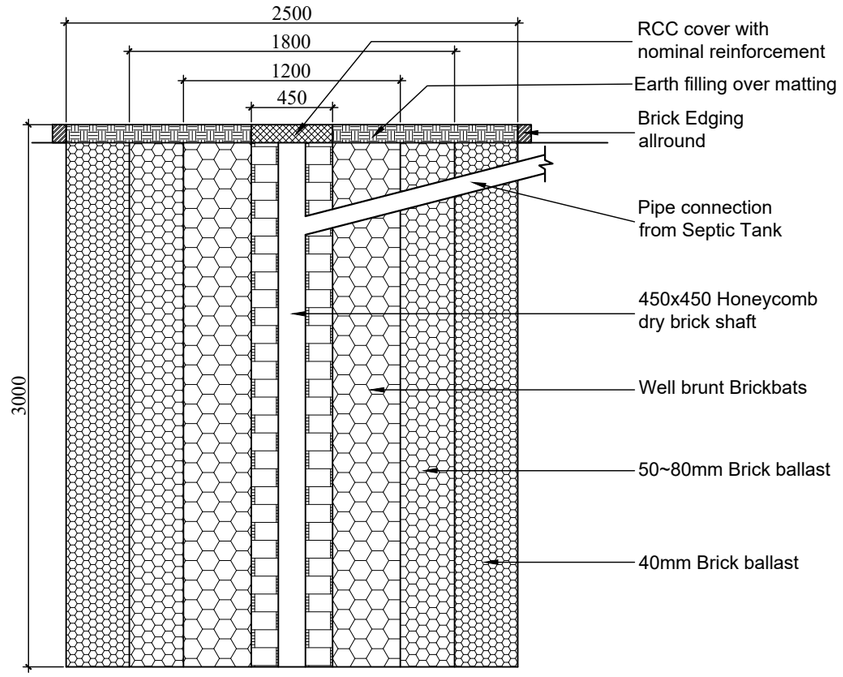

Soak Pit Cross Section

No of user	Length(m) L	Width(m) W	Liquid Depth(m) D
15	2.00	0.90	2.00
25	2.60	1.30	1.80
50	4.00	1.40	2.00
75	5.00	1.50	2.00
100	5.70	2.10	1.70
150	7.70	2.40	1.70

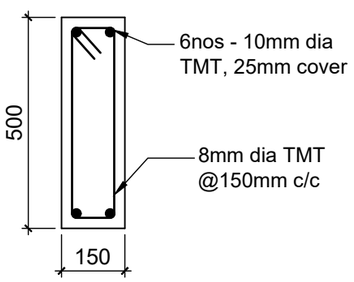

RCC Baffle Wall
Scale-1:15

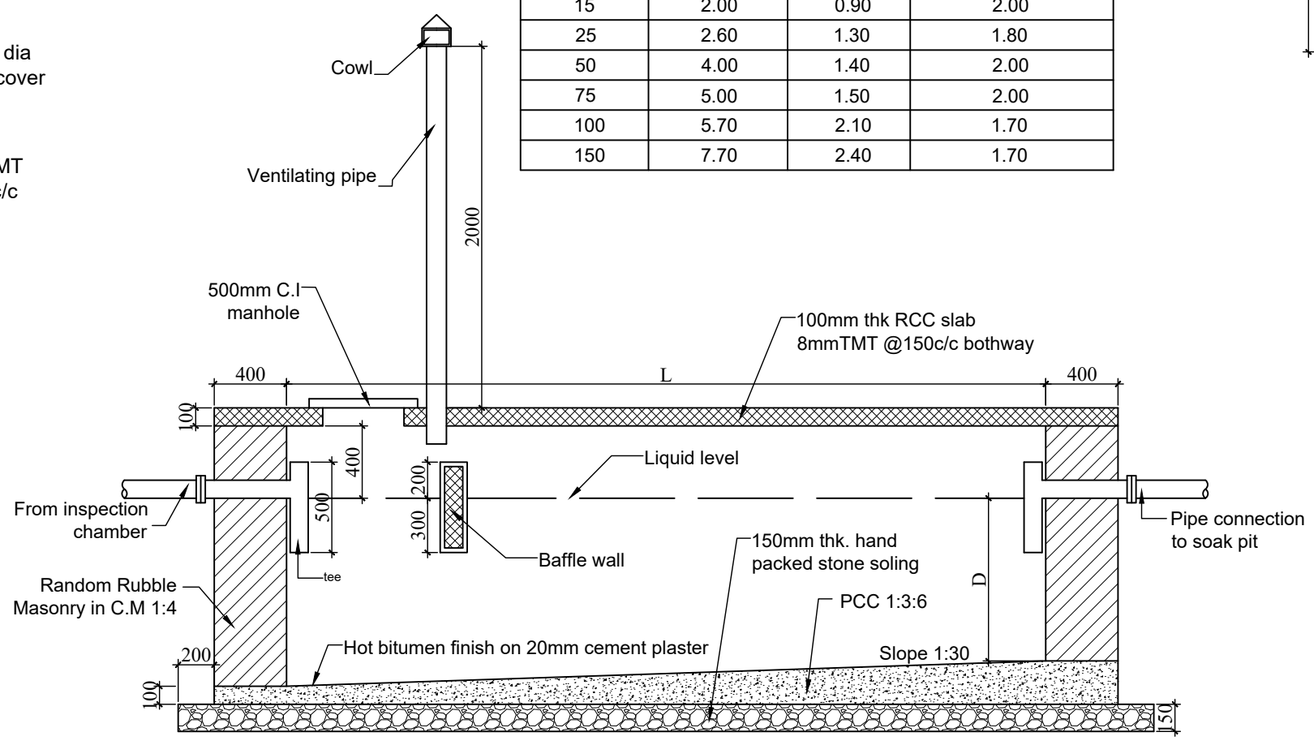

Long section of septic tank on A-A

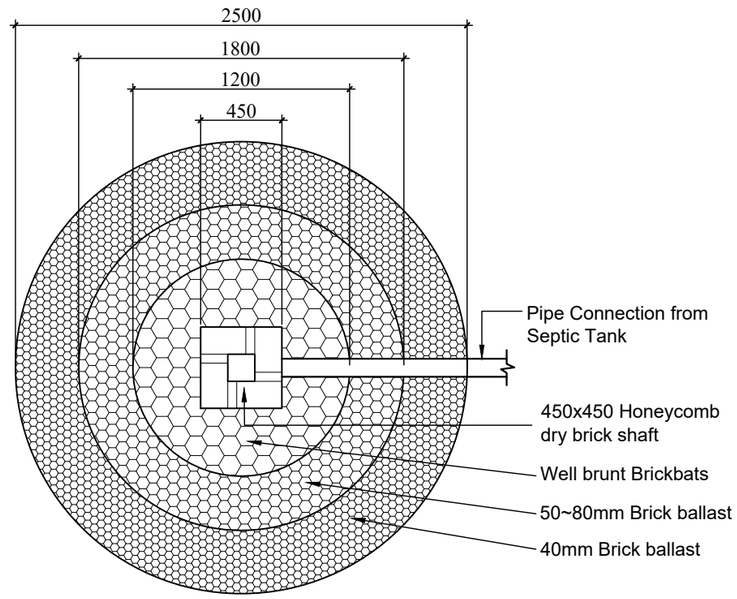

Soak Pit Plan

ROYAL GOVERNMENT OF BHUTAN
MINISTRY OF INFRASTRUCTURE AND TRANSPORT

DEPARTMENT OF INFRASTRUCTURE DEVELOPMENT
INFRASTRUCTURE DESIGN DIVISION

Notes:
- All dimensions are in mm unless specified otherwise.
- All dimensions measure unfinished surfaces unless specified otherwise.
- All dimensions are to be read and not scaled off.
- Any discrepancies in drawings should immediately be brought to the notice of the design team

PROJECT TITLE:
TOILET FOR SCHOOLS - HPL (GIRLS-7 UNITS)

REV	DATE	DESCRIPTION
1	Jan/2025	1. Cubicle partitions changed to 18mm thick HPL boards. 2. Cubicle doors changed to 18mm thick HPL doors. 3. Granite flooring changed to anti-skid floor tiles. 4. Steel Gate changed to doors with WPC frame & PVC shutter. 5. WPC door shutter changed to PVC shutter. 6. Cement board ceilings (both internal & sofit) changed to PVC ceiling. 7. MS ceiling framing changed to Manufacturer's framing system for PVC ceiling. 8. Internal wall & ceiling finish changed to water-proof plastic paint. 9. Wall tiles included in the passage/corridor area and wash basin wall area. 10. Plinth protection & drain updated as per porch roof coverage.

DRAWING TITLE: SEPTIC TANK PLAN, SECTION-AA, CROSS SECTION & SOAK PIT PLAN

DESIGNED BY:	DRAWN BY:	CHECKED BY:	SCALE:
(TSHERING CHODEN) CHIEF ARCHITECT	(PEMA CHOZOM) ASST. ARCHITECT	(TSHERING CHODEN) CHIEF ARCHITECT	1:35
REVIEWED & APPROVED BY: (TSHERING CHODEN) CHIEF ARCHITECT	DATE: OCTOBER/2024	DRAWING NO. TLT-HPL-7/ARC/15	

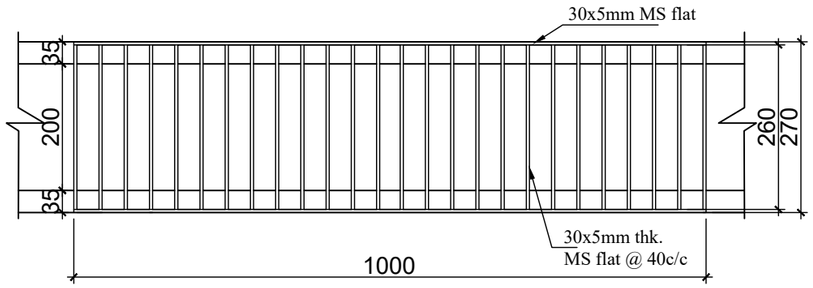

MS grating drain cover

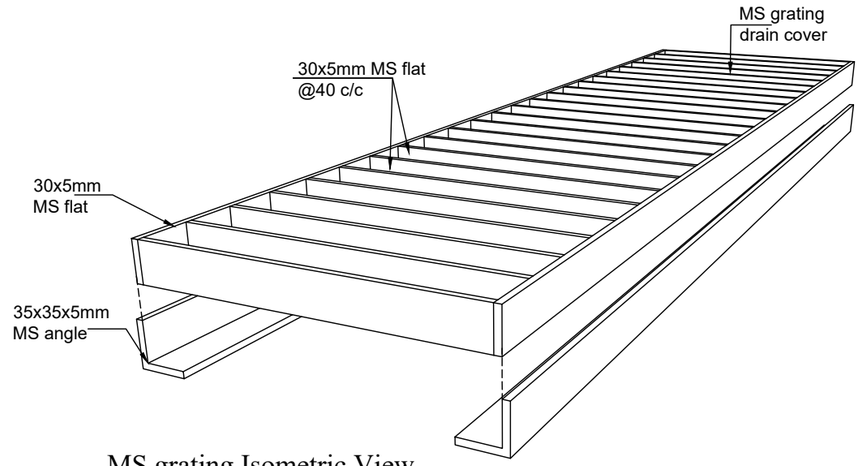

MS grating Isometric View

Scale =NTS

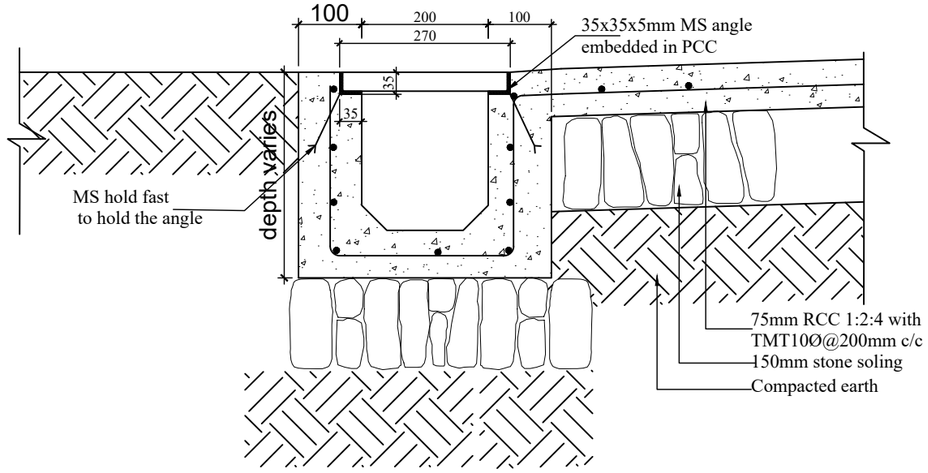

Typical drain details

Sample

Note:-
-Drain cover should be of 1m length each.
-Cover shall be removable (to be lifted) to clean the drains.

ROYAL GOVERNMENT OF BHUTAN
MINISTRY OF INFRASTRUCTURE AND TRANSPORT

DEPARTMENT OF INFRASTRUCTURE DEVELOPMENT
INFRASTRUCTURE DESIGN DIVISION

Notes:
-All dimensions are in mm unless specified otherwise.
-All dimensions measure unfinished surfaces unless specified otherwise.
-All dimensions are to be read and not scaled off.
- Any discrepancies in drawings should immediately be brought to the notice of the design team

PROJECT TITLE:
TOILET FOR SCHOOLS - HPL
(GIRLS-7 UNITS)

REV	DATE	DESCRIPTION
1	Jan/2025	1. Cubicle partitions changed to 18mm thick HPL boards. 2. Cubicle doors changed to 18mm thick HPL doors. 3. Granite flooring changed to anti-skid floor tiles. 4. Steel Gate changed to doors with WPC frame & PVC shutter. 5. WPC door shutter changed to PVC shutter. 6. Cement board ceilings (both internal & sofit) changed to PVC ceiling. 7. MS ceiling framing changed to Manufacturer's framing system for PVC ceiling. 8. Internal wall & ceiling finish changed to water-proof plastic paint. 9. Wall tiles included in the passage/corridor area and wash basin wall area. 10. Plinth protection & drain updated as per porch roof coverage.

DRAWING TITLE: MS GRATING DRAIN COVER

DESIGNED BY:	DRAWN BY:	CHECKED BY:	SCALE:
(TSHERING CHODEN) CHIEF ARCHITECT	(PEMA CHOZOM) ASST. ARCHITECT	(TSHERING CHODEN) CHIEF ARCHITECT	1:10
REVIEWED & APPROVED BY: (TSHERING CHODEN) CHIEF ARCHITECT	DATE: OCTOBER/2024	DRAWING NO. TLT-HPL-7/ARC/16	

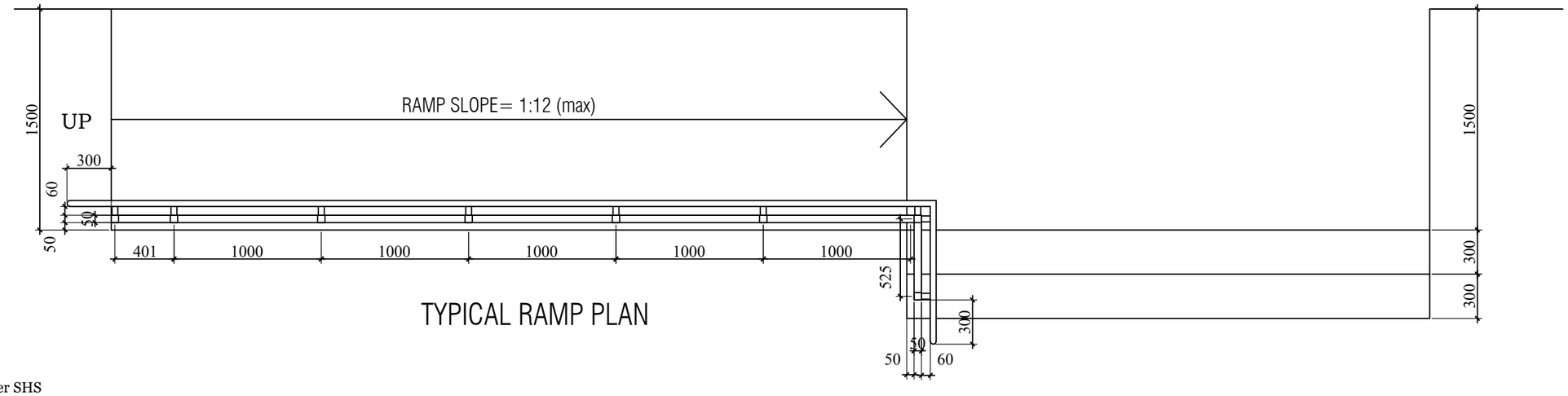

TYPICAL RAMP PLAN

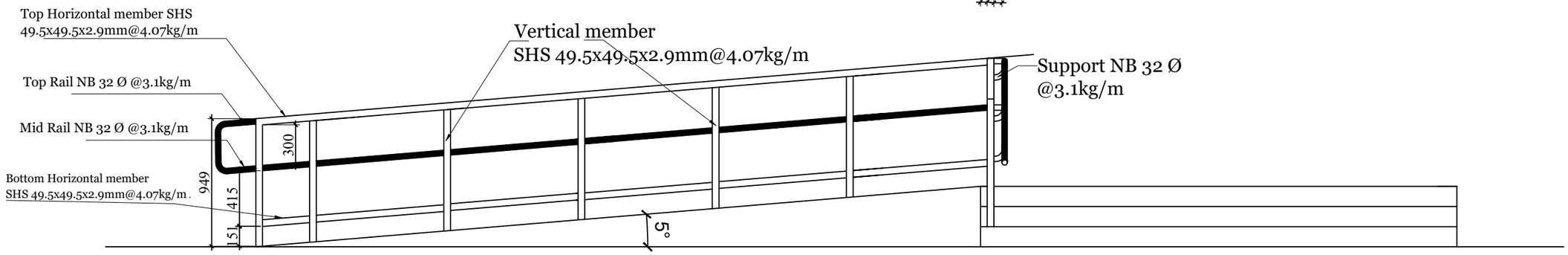

FRONT ELEVATION

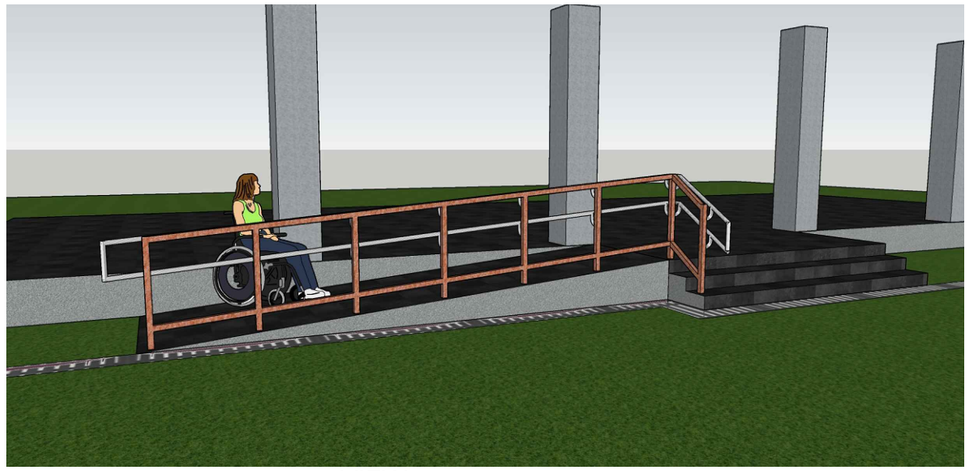

VIEW

ROYAL GOVERNMENT OF BHUTAN
MINISTRY OF INFRASTRUCTURE AND TRANSPORT

DEPARTMENT OF INFRASTRUCTURE DEVELOPMENT
INFRASTRUCTURE DESIGN DIVISION

Notes:
-All dimensions are in mm unless specified otherwise.
-All dimensions measure unfinished surfaces unless specified otherwise.
-All dimensions are to be read and not scaled off.
- Any discrepancies in drawings should immediately be brought to the notice of the design team

PROJECT TITLE:

TOILET FOR SCHOOLS - HPL
(GIRLS-7 UNITS)

REV	DATE	DESCRIPTION
1	Jan/2025	1. Cubicle partitions changed to 18mm thick HPL boards. 2. Cubicle doors changed to 18mm thick HPL doors. 3. Granite flooring changed to anti-skid floor tiles. 4. Steel Gate changed to doors with WPC frame & PVC shutter. 5. WPC door shutter changed to PVC shutter. 6. Cement board ceilings (both internal & soffit) changed to PVC ceiling. 7. MS ceiling framing changed to Manufacturer's framing system for PVC ceiling. 8. Internal wall & ceiling finish changed to water-proof plastic paint. 9. Wall tiles included in the passage/corridor area and wash basin wall area. 10. Plinth protection & drain updated as per porch roof coverage.

DRAWING TITLE: TYPICAL RAILING DETAILS

DESIGNED BY:	DRAWN BY:	CHECKED BY:	SCALE:
(TSHERING CHODEN) CHIEF ARCHITECT	(PEMA CHOZOM) ASST. ARCHITECT	(TSHERING CHODEN) CHIEF ARCHITECT	1:35
REVIEWED & APPROVED BY:	DATE:	DRAWING NO.	
(TSHERING CHODEN) CHIEF ARCHITECT	OCTOBER/2024	TLT-HPL-7/ARC/17	

MOIT

MINISTRY OF INFRASTRUCTURE AND TRANSPORT

DEPARTMENT OF INFRASTRUCTURE DEVELOPMENT
INFRASTRUCTURE DESIGN DIVISION

STRUCTURAL DRAWINGS
Toilet for Schools-HPL PARTITION
(Girls 7-Units)

JANUARY/2025 (REVISION)

STRUCTURAL DRAWINGS
TOILET FOR SCHOOLS-HPL (GIRLS - 7 UNITS)

DRAWING REFERENCE INDEX

SL NO.	DRAWING TITLE	DRAWING NO.
01	General Structural Notes	TLT-HPL-7/STR/01
02	Foundation Layout Plan	TLT-HPL-7/STR/02
03	Wall Foundation and Column Footing Detail	TLT-HPL-7/STR/03
04	Vertical Rebars and Partition Wall Reinforcement Layout PLan	TLT-HPL-7/STR/04
05	Splicing and Ductile Detailing in Beams and Columns	TLT-HPL-7/STR/05
06	Column Reinforcement Detail	TLT-HPL-7STR/06
07	Beam Reinforcement Detail along Frame 1, 2, C & D	TLT-HPL-7/STR/07
08	Beam Layout Plan and Section Detail	TLT-HPL-7/STR/08
09	Tank Slab Reinforcement Detail	TLT-HPL-7/STR/09
10	Plinth Band Layout Plan and Detail	TLT-HPL-7/STR/10
11	Sill Band Layout Plan and Detail	TLT-HPL-7/STR/11
12	Lintel Band Layout Plan and Detail	TLT-HPL-7/STR/12
13	Lower Level Roof Band Layout Plan and Detail	TLT-HPL-7/STR/13
14	Upper Level Roof Band Layout Plan and Detail	TLT-HPL-7/STR/14
15	Roof Truss Layout Plan	TLT-HPL-7/STR/15
16	Roof Truss Member Detail	TLT-HPL-7/STR/16
17	Roof Truss Fixing and Member Connection Detail	TLT-HPL-7/STR/17

ROYAL GOVERNMENT OF BHUTAN
MINISTRY OF INFRASTRUCTURE AND TRANSPORT

DEPARTMENT OF INFRASTRUCTURE DEVELOPMENT
INFRASTRUCTURE DESIGN DIVISION

Notes:
-All dimensions are in mm unless specified otherwise.
-All dimensions measure unfinished surfaces unless specified otherwise.
-All dimensions are to be read and not scaled off.
- Any discrepancies in drawings should immediately be brought to the notice of the design team

PROJECT TITLE:
TOILET FOR SCHOOLS-HPL (GIRLS-7 UNITS)

REV	DATE	DESCRIPTION
1	Jan/2025	1. Cubicle partitions changed to 18mm thick HPL boards. 2. Cubicle doors changed to 18mm thick HPL doors. 3. Granite flooring changed to anti-skid floor tiles. 4. Steel Gate changed to doors with WPC frame & PVC shutter. 5. WPC door shutter changed to PVC shutter. 6. Cement board ceilings (both internal & soffit) changed to PVC ceiling. 7. MS ceiling framing changed to Manufacturer's framing system for PVC ceiling. 8. Internal wall & ceiling finish changed to water-proof plastic paint. 9. Wall tiles included in the passage/corridor area and wash basin wall area. 10. Plinth protection & drain updated as per porch roof coverage.

DRAWING TITLE: DRAWING LIST

DESIGNED BY:	DRAWN BY:	CHECKED BY:	SCALE:
(DAWA WANGMO) PRINCIPAL ENGINEER	(DAWA WANGMO) PRINCIPAL ENGINEER	(TSHERING CHODEN) CHIEF ARCHITECT	NTS
REVIEWED & APPROVED BY:	DATE:	DRAWING NO.	
(TSHERING CHODEN) CHIEF ARCHITECT	MARCH/2024	TLT-HPL-7/STR/00	

A. General:

ALL DIMENSIONS ARE IN "millimetres" UNLESS OTHERWISE SPECIFIED
ALL STRUCTURAL DRAWINGS SHALL BE READ IN CONJUNCTION WITH THE ARCHITECTURAL DRAWINGS
DIMENSIONS SHALL NOT BE SCALED FROM THE DRAWINGS UNDER ANY CIRCUMSTANCES

B. Technical Datas:

Grade of Concrete : M20
Grade of Reinforcing Bars : TMT Fe500
Safe Bearing Capacity of Soil : 150KN/m2 (if abnormal soil condition exists, consult the Design Engineer)

C. Unit Weight of Materials

Reinforced Cement Concrete : 25 KN/m3
Plain Cement Concrete : 22 KN/m3
Brick Masonry : 20 KN/m3
Stone Masonry : 24 KN/m3
Timber : 7.0 KN/m3
Structural Steel : 78.5 KN/m3
Fresh snow : 1.8 KN/m3
Compacted snow : 5.0 KN/m3

D. Loadings for structural design:

► *Dead Loads:*

Derived from the above unit weights

► *Live Loads:*

1. Residential Buildings:

Rooms, Kitchens,Toilets & Bathrooms : 2.0 KN/m2
Staircases, Corridors & Stores : 3.0 KN/m2

2. Hostel Buildings:

Livingrooms, Bedrooms, Dormitories,Toilets & Bathrooms : 2.0 KN/m2
Officerooms : 2.5 KN/m2
Staircases, Corridors, Kitchens & Laundries : 3.0 KN/m2
Dining, Cafeteria & Restaurants : 4.0 KN/m2
Storerooms : 5.0 KN/m2

3. Educational Buildings:

Dormitories, Toilets & Bathrooms : 2.0 KN/m2
Ofiices,Dining, Cafeteria, Lounges & Staff rooms : 2.5 KN/m2
Kitchens, Classrooms, Lecture rooms, Staircases & Corridors : 3.0 KN/m2

4. Roofs: Less than 10° slope

Inaccessible roofs : 0.75 KN/m2
Accessible roofs : 1.50 KN/m2 (for slope >10°, minus 2KN/m2 for each degree increase from 10°)

► *Wind Loads:*

Wind Velocity : 44 m/s or Basic Wind Pressure : 1.5 KN/m2

► *Seismic Loads:*

As per IS 1893-1993

Zone Factor : 0.36
Medium Soil Sites
Importance Factor : 1.5
Response Reduction Factor : 5.0

E. Load Combinations:

1. For Reinforced Concrete Structures:

1.5 (Dead Loads + Imposed Loads)
1.2 (Dead Loads + Imposed Loads ±Seismic Loads)
1.5 (Dead Loads + Seismic Loads)
0.9 (Dead Loads) ± 1.5(Seismic Loads)

2. For Steel Structures:

1.7 (Dead Loads + Imposed Loads)
1.3 (Dead Loads + Imposed Loads ±Seismic Loads)
1.7 (Dead Loads + Seismic Loads)

F. Nominal Covers to Steel Reinforcement:

For fire resistance between 2 to 3 hours

- *Bottom Covers:*

Beams : 40mm
Slabs : 35mm
Columns : 40mm or not less than Ø of bar
Footings : 50mm (minimum)

- *Side Covers:*

Beams : 25mm
Slabs : 15mm
Columns : 40mm or not less than Ø of bar
Footings : 40mm

G. For Load Bearing Structures:

Reference IS 4326-1993 (Earthquake Resistant Design & Construction of Buildings)

Seismic Strengthening Arrangements:

i. Plinth Bands
ii. Vertical Reinforcements
iii. Lintel Bands
iv. Roof Bands
v. Gable Bands

Concrete mix around vertical steel : Cement : Sand = 1:2
Concrete mix for masonry works : Cement : Sand = 1:4

H. IS Codes Referred:

IS 456 : 2000 - Plain and Reinforced Concrete
IS 875 (part 1 to 5) : 1987 - Design Loads (Other than earthquake) for Buildings and Structures
IS 1983 (part 1) : 2002 - Criteria for Earthquake Resistant Design of Structures
IS 4326 : 1993 - Earthquake Resistant Design & Construction of Buildings
IS 13920 : 1993 - Ductile Detailing of RC Structures subjected to Seismic Forces
NUDC/002/1985 - Manual for Timber Engineering Design, RGoB

► *General Structural Notes (For Framed RC Structures):*

i. All foundations shall be laid on well compacted and leveled soil.
ii. Stirrups shall be provided with 135° hooks with 10Ø extension at each end embedded in concrete
iii. Splicing in beams shall not be provided within a distance of 2D from the joint face and not in mid span at bottom
iv. Not more than 50% of the bars shall be spliced at a section
v. Spacing of stirrups shall not exceed 150mm c/c in the splice region.
vi. Lap splices for column reinforcement shall be provided only in the centre half of the member.

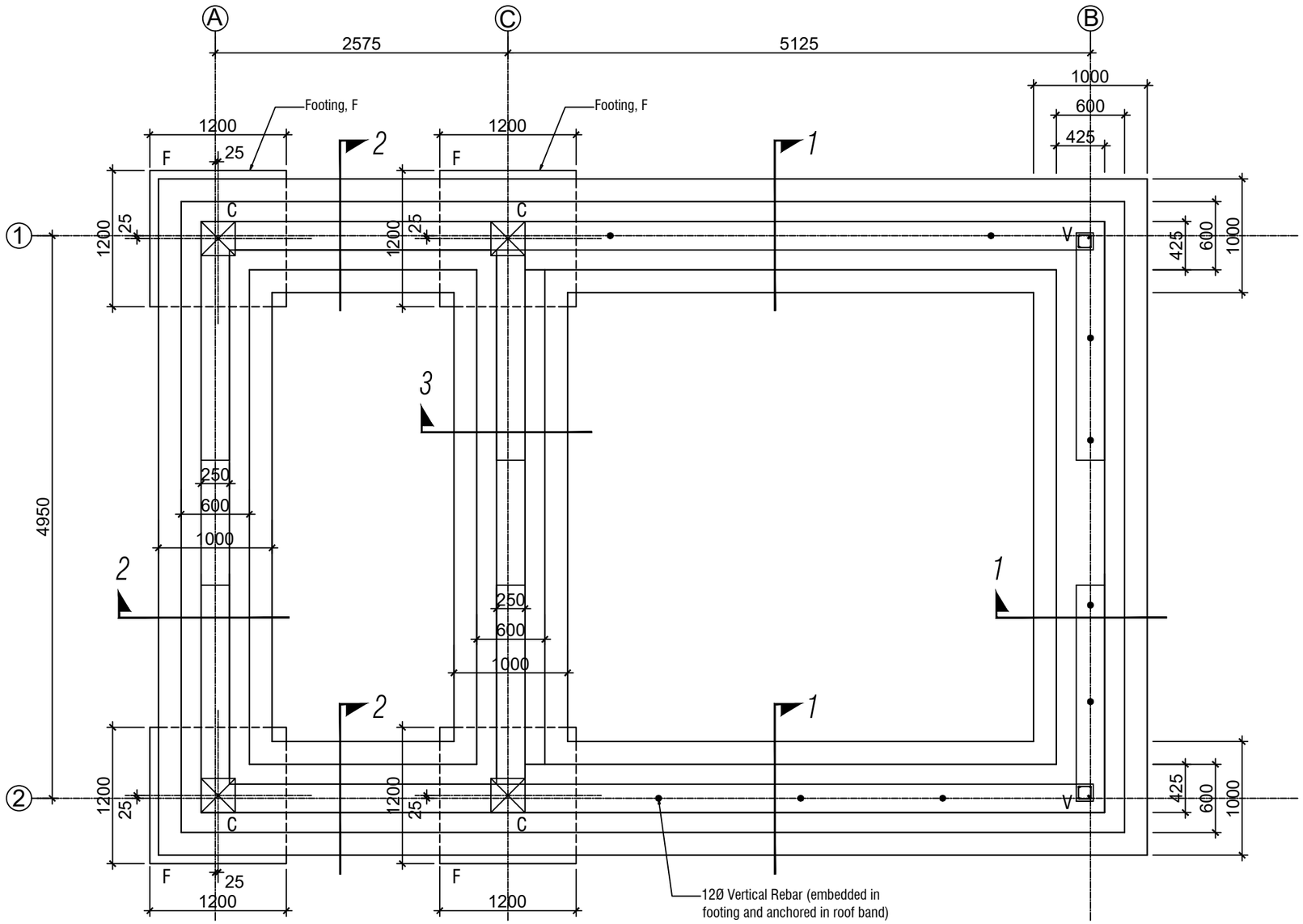

FOUNDATION PLAN

ROYAL GOVERNMENT OF BHUTAN
MINISTRY OF INFRASTRUCTURE AND TRANSPORT

DEPARTMENT OF INFRASTRUCTURE DEVELOPMENT
INFRASTRUCTURE DESIGN DIVISION

Notes:
-All dimensions are in mm unless specified otherwise.
-All dimensions measure unfinished surfaces unless specified otherwise.
-All dimensions are to be read and not scaled off.
- Any discrepancies in drawings should immediately be brought to the notice of the design team

PROJECT TITLE:

TOILET FOR SCHOOLS-HPL
(GIRLS-7 UNITS)

REV	DATE	DESCRIPTION
1	Jan/2025	1. Cubicle partitions changed to 18mm thick HPL boards. 2. Cubicle doors changed to 18mm thick HPL doors. 3. Granite flooring changed to anti-skid floor tiles. 4. Steel Gate changed to doors with WPC frame & PVC shutter. 5. WPC door shutter changed to PVC shutter. 6. Cement board ceilings (both internal & soffit) changed to PVC ceiling. 7. MS ceiling framing changed to Manufacturer's framing system for PVC ceiling. 8. Internal wall & ceiling finish changed to water-proof plastic paint. 9. Wall tiles included in the passage/corridor area and wash basin wall area. 10. Plinth protection & drain updated as per porch roof coverage.

DRAWING TITLE: FOUNDATION LAYOUT PLAN

DESIGNED BY:	DRAWN BY:	CHECKED BY:	SCALE:
(DAWA WANGMO) PRINCIPAL ENGINEER	(DAWA WANGMO) PRINCIPAL ENGINEER	(TSHERING CHODEN) CHIEF ARCHITECT	NTS
REVIEWED & APPROVED BY:	DATE:	DRAWING NO.	
(TSHERING CHODEN) CHIEF ARCHITECT	MARCH/2024	TLT-HPL-7/STR/02	

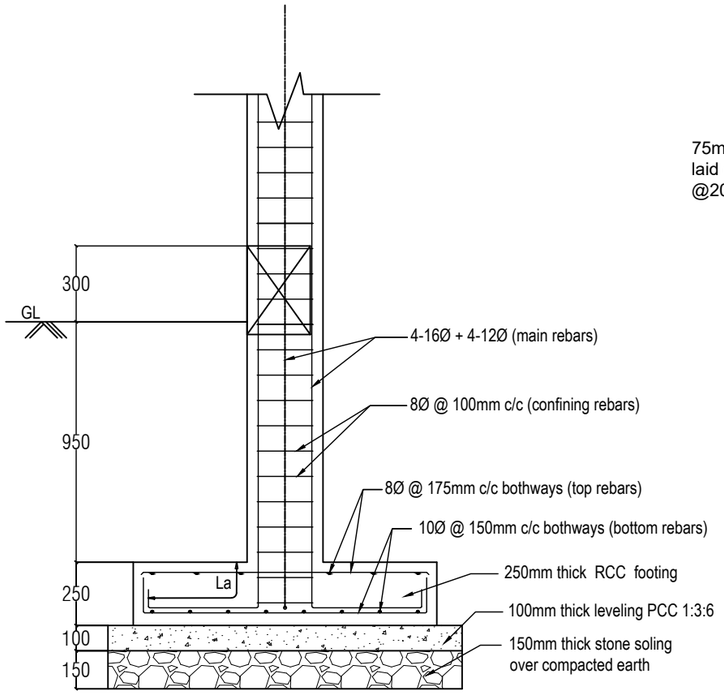

Footing, F Sectional Elevation

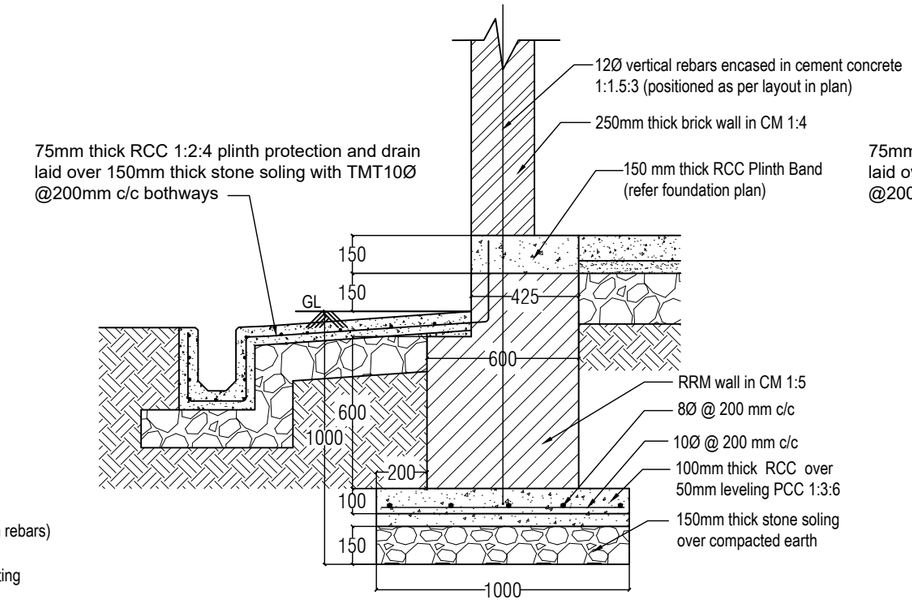

RRM Foundation below Plinth Band
(external wall - section 1)

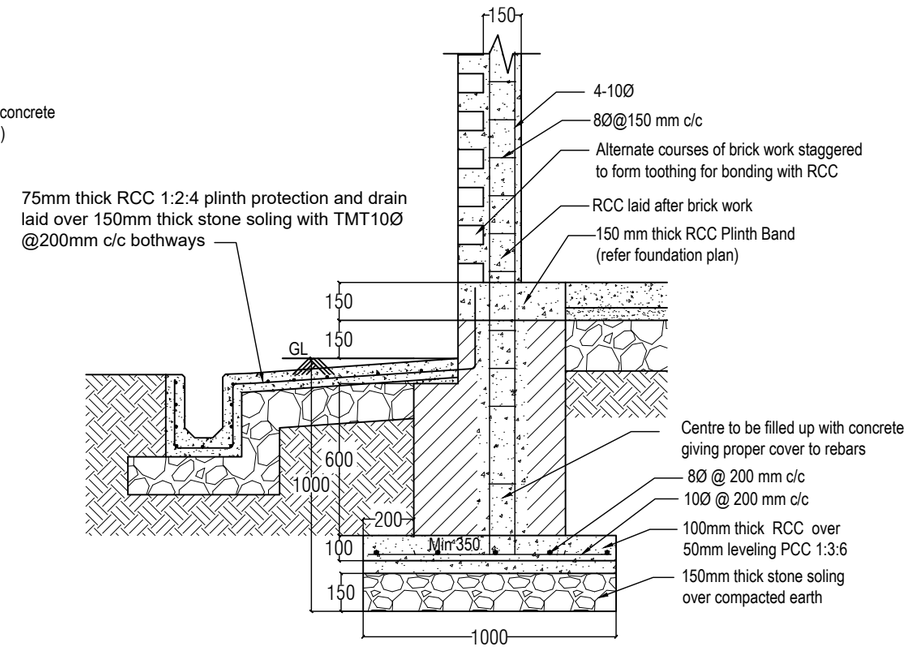

Vertical stiffner V detail

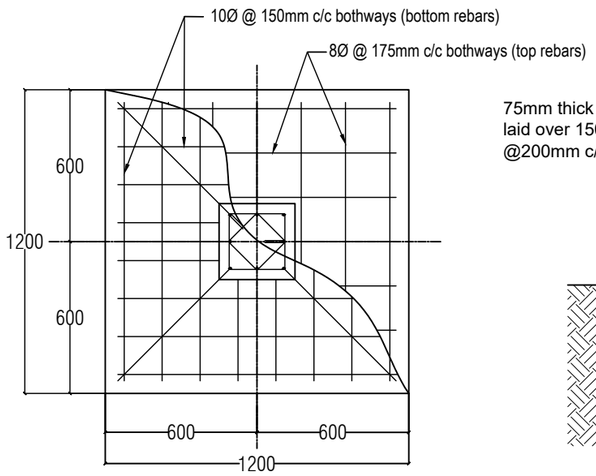

Footing, F Plan

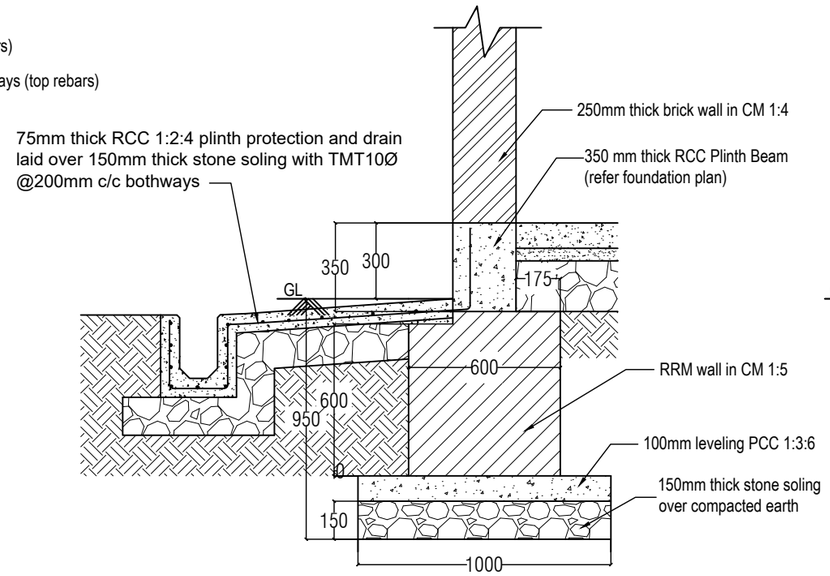

RRM Foundation below Plinth Beam
(external wall- section 2)

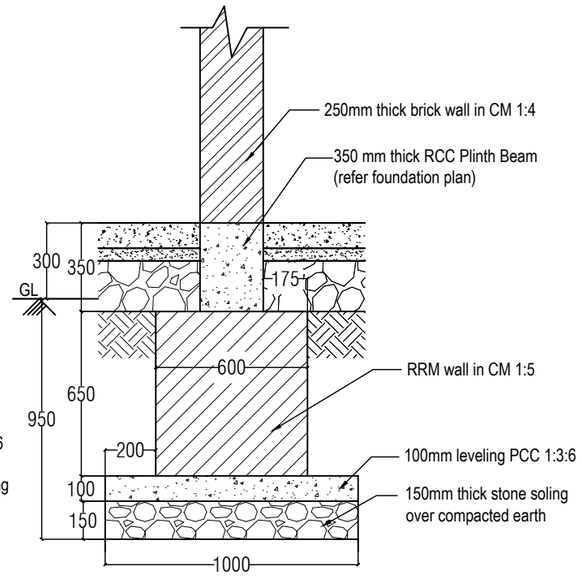

RRM Foundation below Plinth Beam
(internal wall - section 3)

NOTES: -
The Bearing Capacity of soil is assumed as 150KN/m2 and at site, if any abnormalities in the soil conditions exist, please inform the Design Engineer at DoID Office.

Grade of Concrete - M20
Grade of Steel - Fe500 with 14% elongation
Minimum Clear Cover - 50MM at bottom, 40mm at sides

Rebar size	Anchorage length, La
12Ø	690
16Ø	915
20Ø	1140
25Ø	1425

ROYAL GOVERNMENT OF BHUTAN
MINISTRY OF INFRASTRUCTURE AND TRANSPORT

DEPARTMENT OF INFRASTRUCTURE DEVELOPMENT
INFRASTRUCTURE DESIGN DIVISION

Notes:
-All dimensions are in mm unless specified otherwise.
-All dimensions measure unfinished surfaces unless specified otherwise.
-All dimensions are to be read and not scaled off.
- Any discrepancies in drawings should immediately be brought to the notice of the design team

PROJECT TITLE:
TOILET FOR SCHOOLS-HPL
(GIRLS-7 UNITS)

REV	DATE	DESCRIPTION
1	Jan/2025	1. Cubicle partitions changed to 18mm thick HPL boards. 2. Cubicle doors changed to 18mm thick HPL doors. 3. Granite flooring changed to anti-skid floor tiles. 4. Steel Gate changed to doors with WPC frame & PVC shutter. 5. WPC door shutter changed to PVC shutter. 6. Cement board ceilings (both internal & soffit) changed to PVC ceiling. 7. MS ceiling framing changed to Manufacturer's framing system for PVC ceiling. 8. Internal wall & ceiling finish changed to water-proof plastic paint. 9. Wall tiles included in the passage/corridor area and wash basin wall area. 10. Plinth protection & drain updated as per porch roof coverage.

DRAWING TITLE: WALL FOUNDATION AND COLUMN FOOTING DETAIL

DESIGNED BY:	DRAWN BY:	CHECKED BY:	SCALE:
(DAWA WANGMO) PRINCIPAL ENGINEER	(DAWA WANGMO) PRINCIPAL ENGINEER	(TSHERING CHODEN) CHIEF ARCHITECT	NTS
REVIEWED & APPROVED BY:	DATE:	DRAWING NO.	
(TSHERING CHODEN) CHIEF ARCHITECT	MARCH/2024	TLT-HPL-7/STR/03	

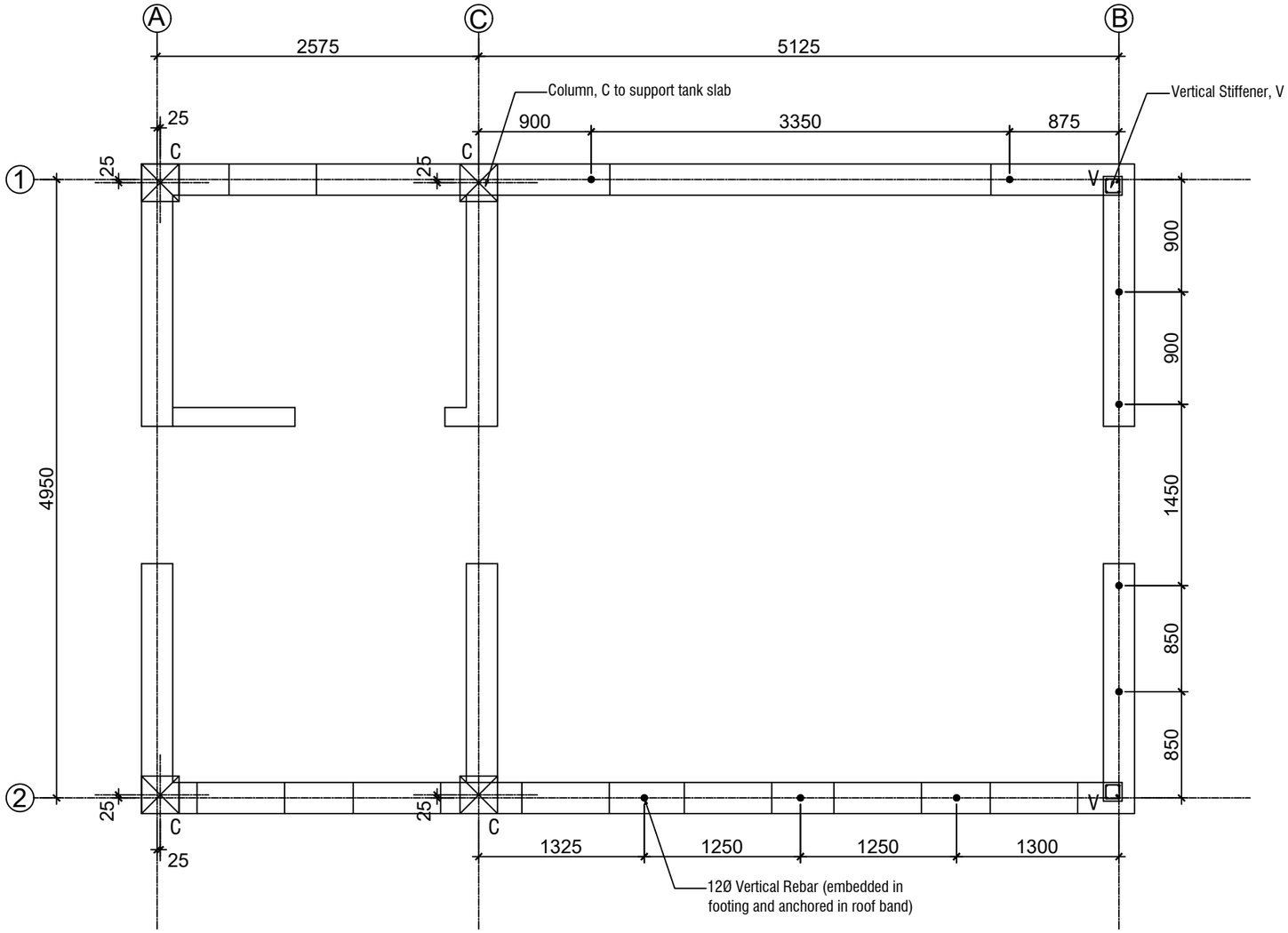

VERTICAL AND PARTITION WALL REBAR LAYOUT PLAN

NOTE: The min. anchorage length for 12Ø vertical rebars is 600mm and 10Ø is 500mm at bottom and top.

ROYAL GOVERNMENT OF BHUTAN
MINISTRY OF INFRASTRUCTURE AND TRANSPORT

DEPARTMENT OF INFRASTRUCTURE DEVELOPMENT
INFRASTRUCTURE DESIGN DIVISION

Notes:
-All dimensions are in mm unless specified otherwise.
-All dimensions measure unfinished surfaces unless specified otherwise.
-All dimensions are to be read and not scaled off.
- Any discrepancies in drawings should immediately be brought to the notice of the design team

PROJECT TITLE:

TOILET FOR SCHOOLS-HPL
(GIRLS-7 UNITS)

REV	DATE	DESCRIPTION
1	Jan/2025	1. Cubicle partitions changed to 18mm thick HPL boards. 2. Cubicle doors changed to 18mm thick HPL doors. 3. Granite flooring changed to anti-skid floor tiles. 4. Steel Gate changed to doors with WPC frame & PVC shutter. 5. WPC door shutter changed to PVC shutter. 6. Cement board ceilings (both internal & sofit) changed to PVC ceiling. 7. MS ceiling framing changed to Manufacturer's framing system for PVC ceiling. 8. Internal wall & ceiling finish changed to water-proof plastic paint. 9. Wall tiles included in the passage/corridor area and wash basin wall area. 10. Plinth protection & drain updated as per porch roof coverage.

DRAWING TITLE: VERTICAL REBARS AND PARTITION WALL REBAR LAYOUT PLAN

DESIGNED BY:	DRAWN BY:	CHECKED BY:	SCALE:
(DAWA WANGMO) PRINCIPAL ENGINEER	(DAWA WANGMO) PRINCIPAL ENGINEER	(TSHERING CHODEN) CHIEF ARCHITECT	NTS
REVIEWED & APPROVED BY:	DATE:	DRAWING NO.	
(TSHERING CHODEN) CHIEF ARCHITECT	MARCH/2024	TLT-HPL-7/STR/04	

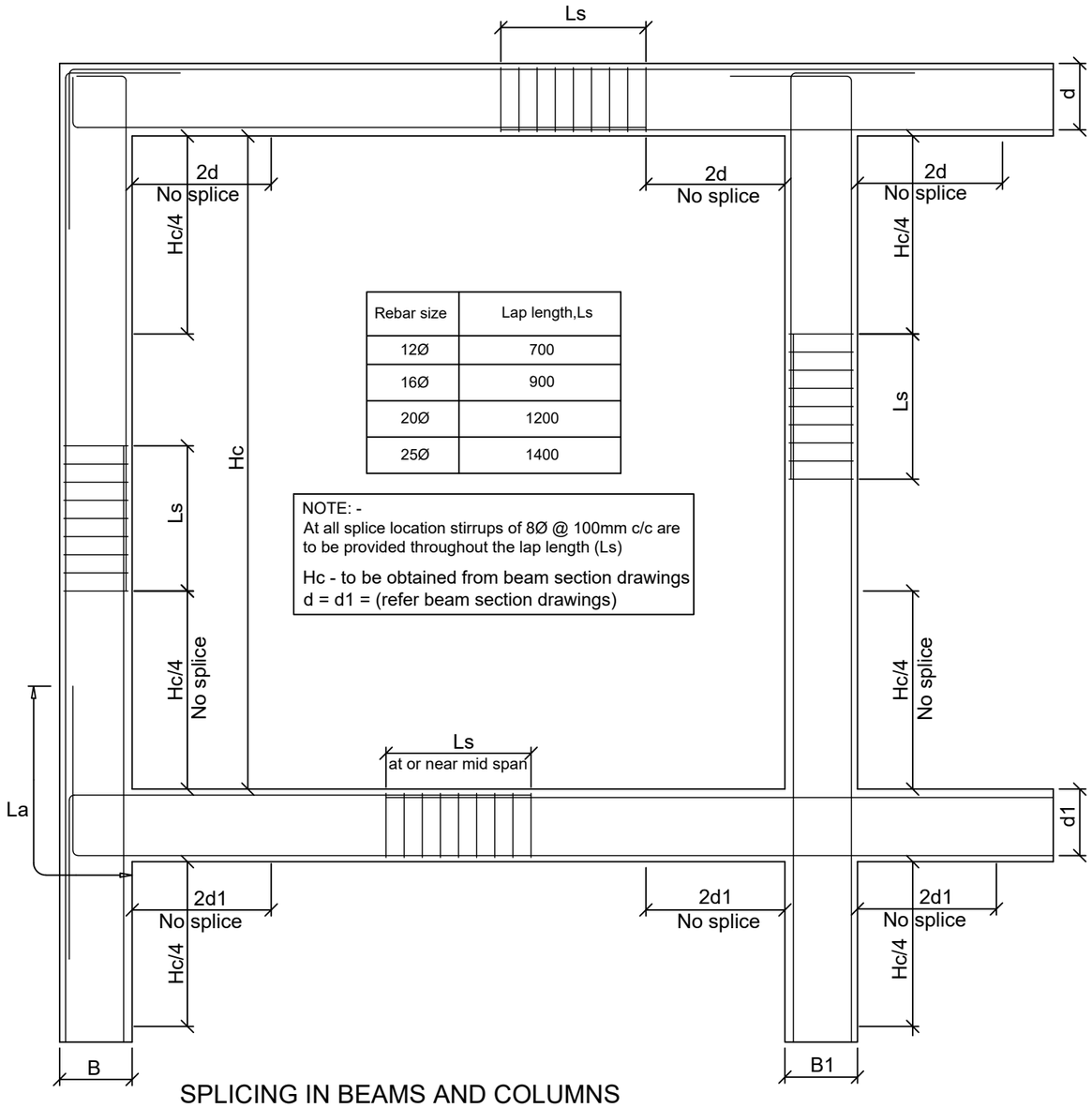

Rebar size	Lap length,Ls
12Ø	700
16Ø	900
20Ø	1200
25Ø	1400

NOTE: -
At all splice location stirrups of 8Ø @ 100mm c/c are to be provided throughout the lap length (Ls)

Hc - to be obtained from beam section drawings
d = d1 = (refer beam section drawings)

SPLICING IN BEAMS AND COLUMNS

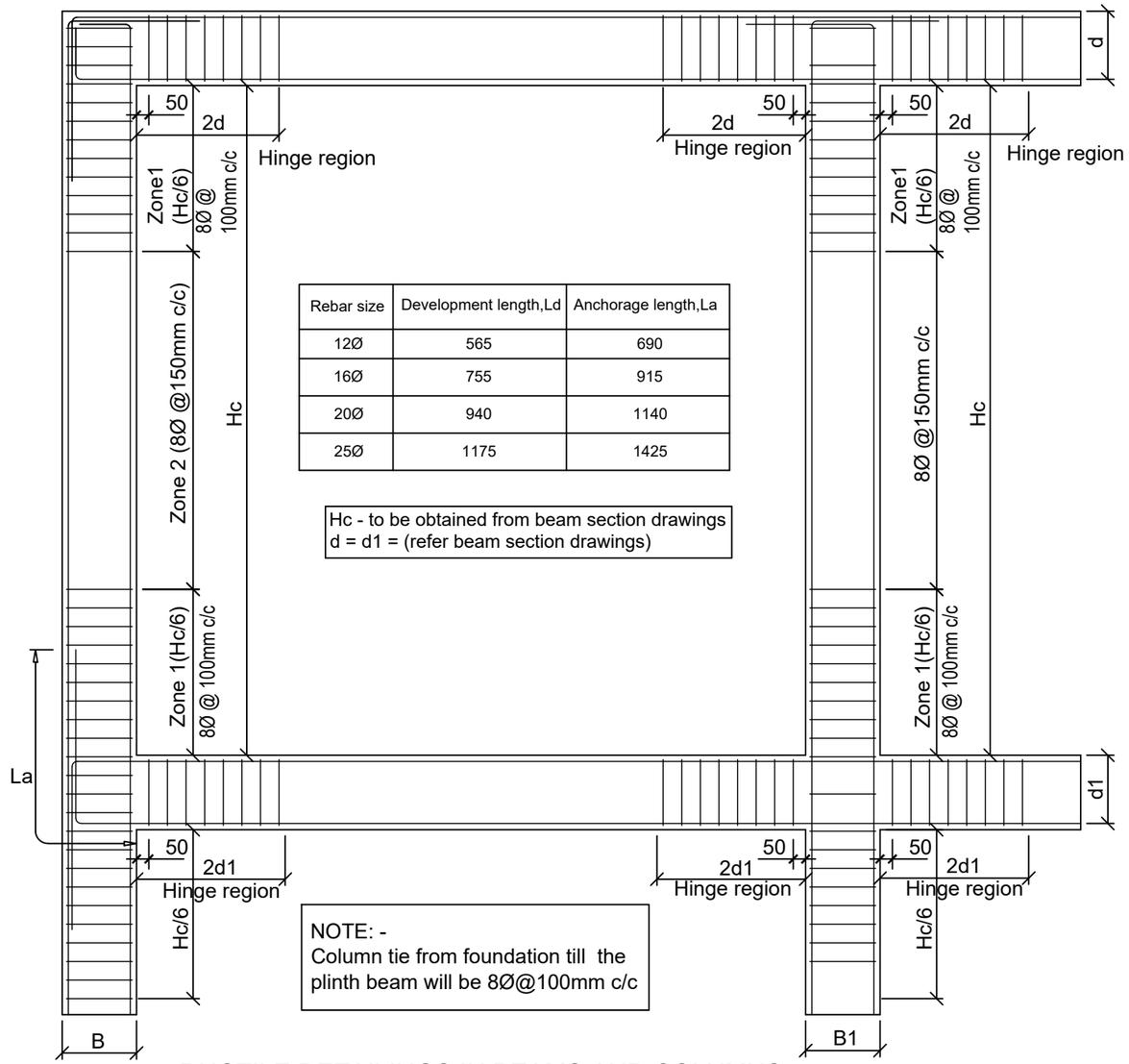

Rebar size	Development length,Ld	Anchorage length,La
12Ø	565	690
16Ø	755	915
20Ø	940	1140
25Ø	1175	1425

Hc - to be obtained from beam section drawings
d = d1 = (refer beam section drawings)

NOTE: -
Column tie from foundation till the plinth beam will be 8Ø@100mm c/c

DUCTILE DETAILINGS IN BEAMS AND COLUMNS

ROYAL GOVERNMENT OF BHUTAN
MINISTRY OF INFRASTRUCTURE AND TRANSPORT

DEPARTMENT OF INFRASTRUCTURE DEVELOPMENT
INFRASTRUCTURE DESIGN DIVISION

Notes:
-All dimensions are in mm unless specified otherwise.
-All dimensions measure unfinished surfaces unless specified otherwise.
-All dimensions are to be read and not scaled off.
- Any discrepancies in drawings should immediately be brought to the notice of the design team

PROJECT TITLE:
TOILET FOR SCHOOLS-HPL
(GIRLS-7 UNITS)

REV	DATE	DESCRIPTION
1	Jan/2025	1. Cubicle partitions changed to 18mm thick HPL boards. 2. Cubicle doors changed to 18mm thick HPL doors. 3. Granite flooring changed to anti-skid floor tiles. 4. Steel Gate changed to doors with WPC frame & PVC shutter. 5. WPC door shutter changed to PVC shutter. 6. Cement board ceilings (both internal & sofit) changed to PVC ceiling. 7. MS ceiling framing changed to Manufacturer's framing system for PVC ceiling. 8. Internal wall & ceiling finish changed to water-proof plastic paint. 9. Wall tiles included in the passage/corridor area and wash basin wall area. 10. Plinth protection & drain updated as per porch roof coverage.

DRAWING TITLE: SPLICING AND DUCTILE DETAILING IN BEAMS AND COLUMNS

DESIGNED BY:	DRAWN BY:	CHECKED BY:	SCALE:
(DAWA WANGMO) PRINCIPAL ENGINEER	(DAWA WANGMO) PRINCIPAL ENGINEER	(TSHERING CHODEN) CHIEF ARCHITECT	NTS
REVIEWED & APPROVED BY:	DATE:	DRAWING NO.	
(TSHERING CHODEN) CHIEF ARCHITECT	MARCH/2024	TLT-HPL-7/STR/05	

COLUMN SCHEDULE

COLUMN TYPE	COLUMN SIZE	COLUMN MAIN REINFORCEMENT		COLUMN TIES		SHAPE OF TIES
				ZONE 1	ZONE 2	
C	300 X 300	4-16Ø +4-12Ø	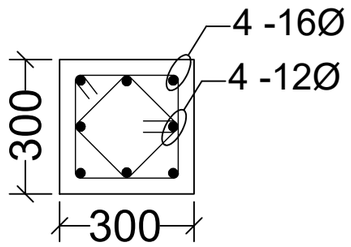	2-8Ø100 c/c	2-8Ø@150 c/c	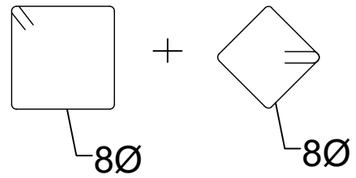

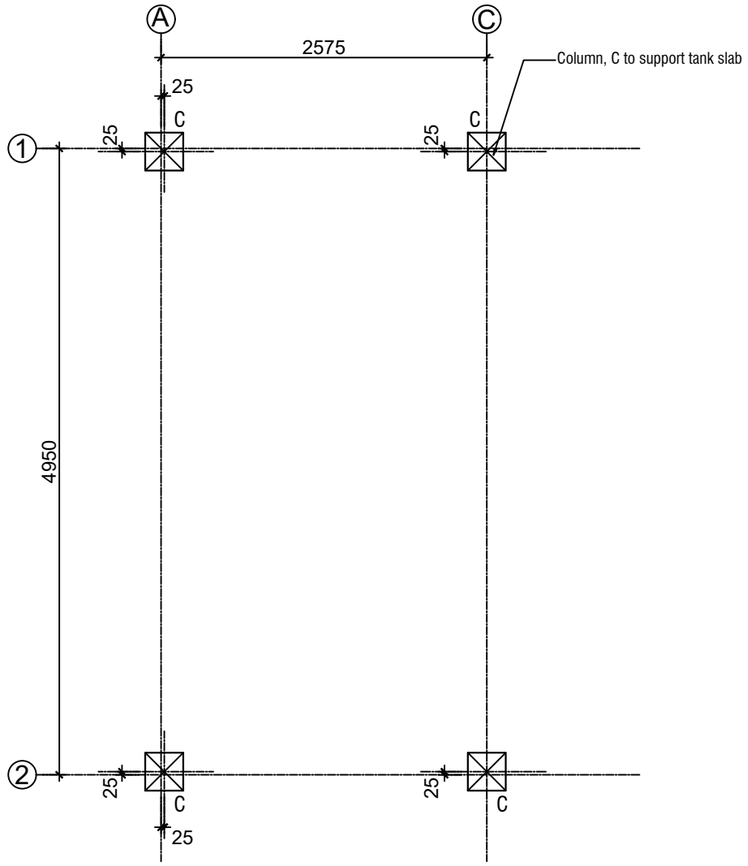

COLUMN LAYOUT PLAN (Tank Slab Area)

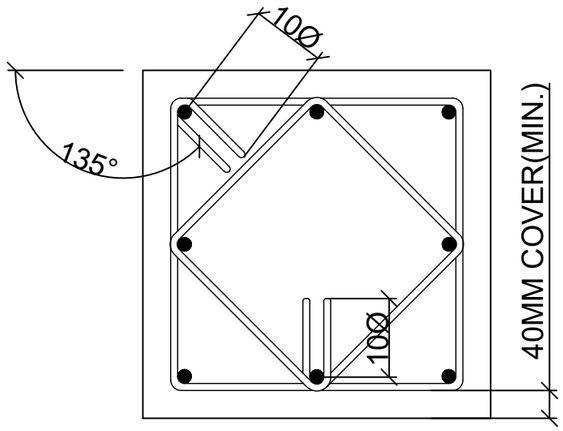

TYPICAL COLUMN TIE DETAIL

NOTES: -
Grade of Concrete - M20
Grade of Steel - Fe500 with 14% Elongation
Refer ductile Detailing for confining reinforcement

ROYAL GOVERNMENT OF BHUTAN
MINISTRY OF INFRASTRUCTURE AND TRANSPORT

DEPARTMENT OF INFRASTRUCTURE DEVELOPMENT
INFRASTRUCTURE DESIGN DIVISION

Notes:
-All dimensions are in mm unless specified otherwise.
-All dimensions measure unfinished surfaces unless specified otherwise.
-All dimensions are to be read and not scaled off.
- Any discrepancies in drawings should immediately be brought to the notice of the design team

PROJECT TITLE:
TOILET FOR SCHOOLS-HPL (GIRLS-7 UNITS)

REV	DATE	DESCRIPTION
1	Jan/2025	1. Cubicle partitions changed to 18mm thick HPL boards. 2. Cubicle doors changed to 18mm thick HPL doors. 3. Granite flooring changed to anti-skid floor tiles. 4. Steel Gate changed to doors with WPC frame & PVC shutter. 5. WPC door shutter changed to PVC shutter. 6. Cement board ceilings (both internal & sofit) changed to PVC ceiling. 7. MS ceiling framing changed to Manufacturer's framing system for PVC ceiling. 8. Internal wall & ceiling finish changed to water-proof plastic paint. 9. Wall tiles included in the passage/corridor area and wash basin wall area. 10. Plinth protection & drain updated as per porch roof coverage.

DRAWING TITLE: COLUMN REINFORCEMENT DETAIL (tank slab area)

DESIGNED BY:	DRAWN BY:	CHECKED BY:	SCALE:
(DAWA WANGMO) PRINCIPAL ENGINEER	(DAWA WANGMO) PRINCIPAL ENGINEER	(TSHERING CHODEN) CHIEF ARCHITECT	NTS
REVIEWED & APPROVED BY:	DATE:	DRAWING NO.	
(TSHERING CHODEN) CHIEF ARCHITECT	MARCH/2024	TLT-HPL-7/STR/06	

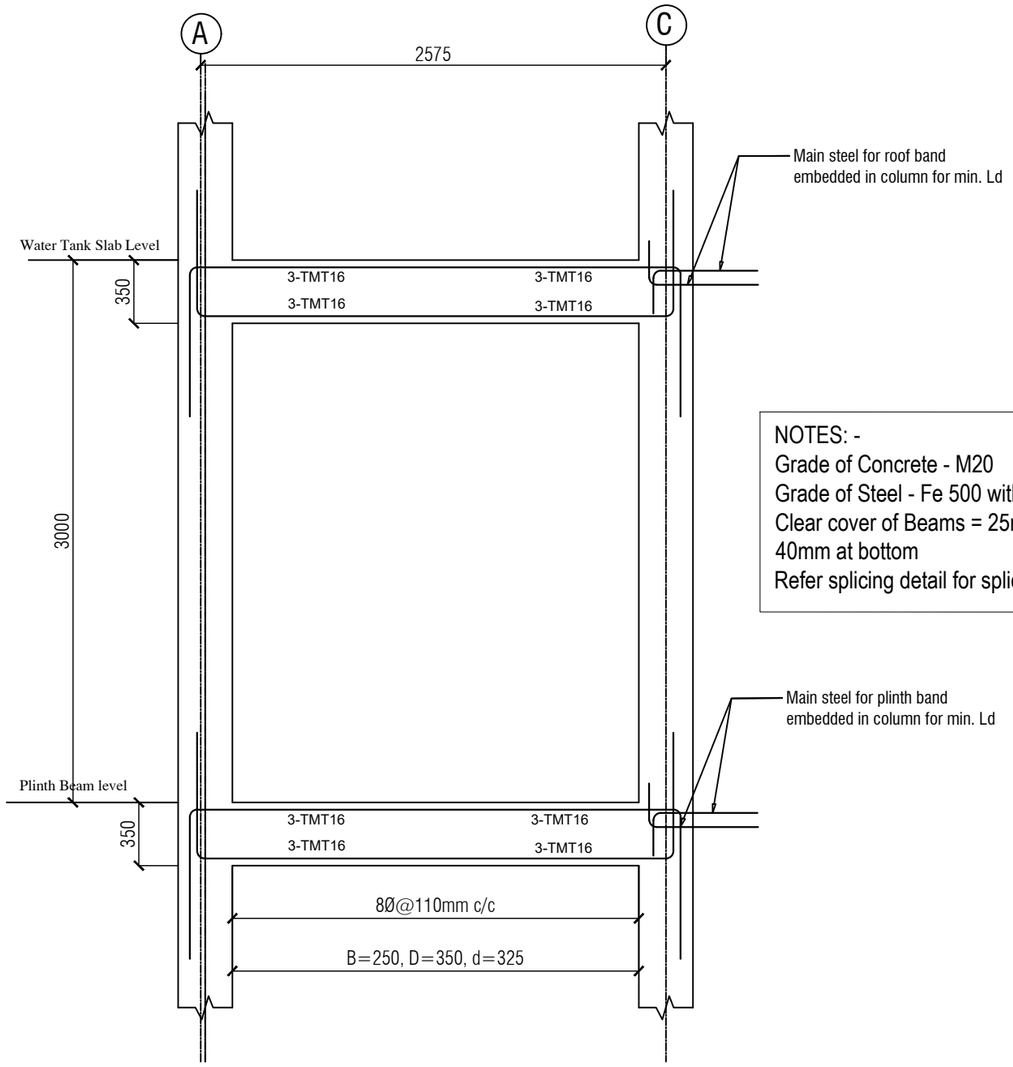

NOTES: -
Grade of Concrete - M20
Grade of Steel - Fe 500 with 14% Elongation
Clear cover of Beams = 25mm at top & sides, 40mm at bottom
Refer splicing detail for splicing location

BEAM REINFORCEMENT DETAIL ALONG FRAME 1 & 2

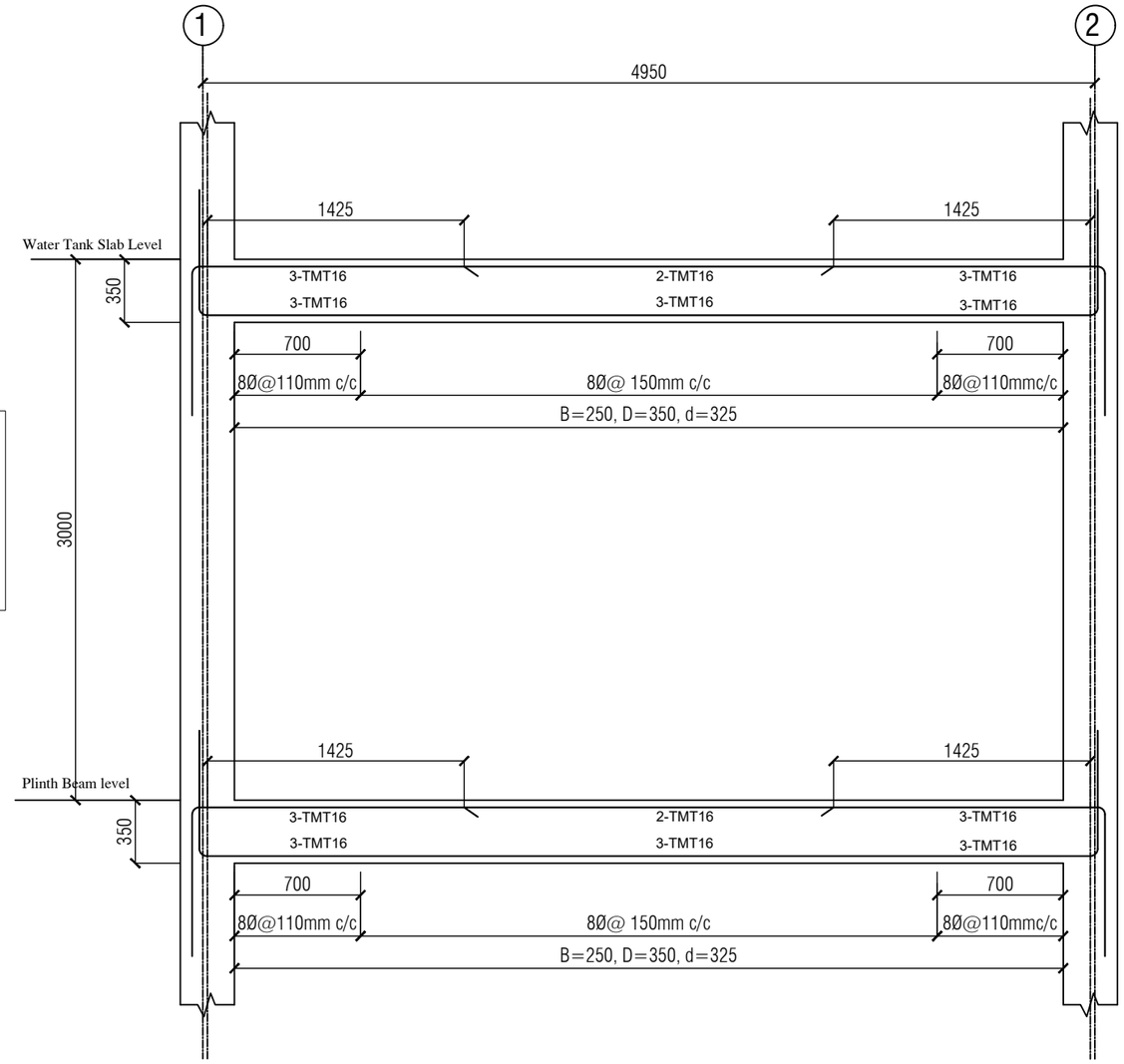

BEAM REINFORCEMENT DETAIL ALONG FRAME A & C

ROYAL GOVERNMENT OF BHUTAN
MINISTRY OF INFRASTRUCTURE AND TRANSPORT

DEPARTMENT OF INFRASTRUCTURE DEVELOPMENT
INFRASTRUCTURE DESIGN DIVISION

Notes:
-All dimensions are in mm unless specified otherwise.
-All dimensions measure unfinished surfaces unless specified otherwise.
-All dimensions are to be read and not scaled off.
- Any discrepancies in drawings should immediately be brought to the notice of the design team

PROJECT TITLE:
TOILET FOR SCHOOLS-HPL (GIRLS-7 UNITS)

REV	DATE	DESCRIPTION
1	Jan/2025	1. Cubicle partitions changed to 18mm thick HPL boards. 2. Cubicle doors changed to 18mm thick HPL doors. 3. Granite flooring changed to anti-skid floor tiles. 4. Steel Gate changed to doors with WPC frame & PVC shutter. 5. WPC door shutter changed to PVC shutter. 6. Cement board ceilings (both internal & sofit) changed to PVC ceiling. 7. MS ceiling framing changed to Manufacturer's framing system for PVC ceiling. 8. Internal wall & ceiling finish changed to water-proof plastic paint. 9. Wall tiles included in the passage/corridor area and wash basin wall area. 10. Plinth protection & drain updated as per porch roof coverage.

DRAWING TITLE: BEAM REINFORCEMENT DETAIL ALONG FRAME 1, 2, A & C

DESIGNED BY:	DRAWN BY:	CHECKED BY:	SCALE:
(DAWA WANGMO) PRINCIPAL ENGINEER	(DAWA WANGMO) PRINCIPAL ENGINEER	(TSHERING CHODEN) CHIEF ARCHITECT	NTS
REVIEWED & APPROVED BY:	DATE:	DRAWING NO.	
(TSHERING CHODEN) CHIEF ARCHITECT	MARCH/2024	TLT-HPL-7/STR/07	

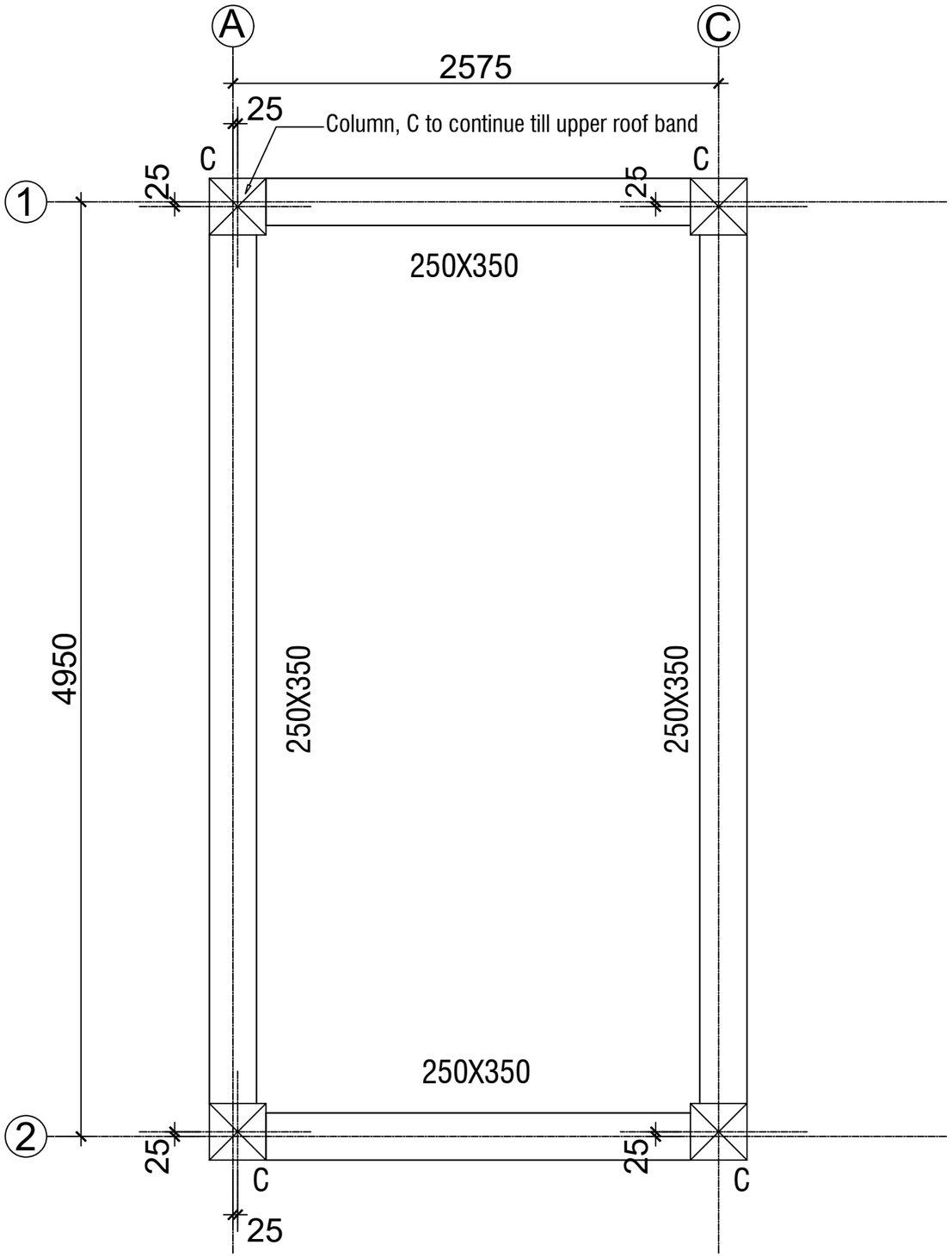

PLINTH AND ROOF BEAM LAYOUT PLAN (Tank Slab Area)

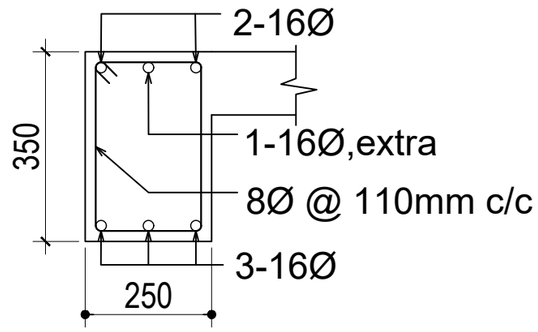

Section at support

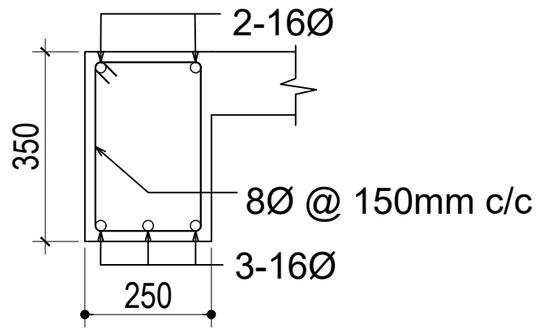

Section at mid section

Beam Section at Roof Slab Level along Frames A & C

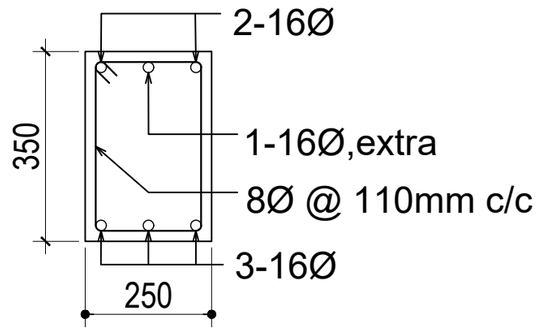

Section at support

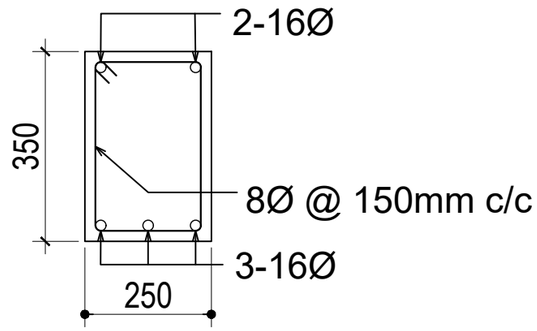

Section at mid section

Beam Section at Plinth Beam Level along Frames A & C

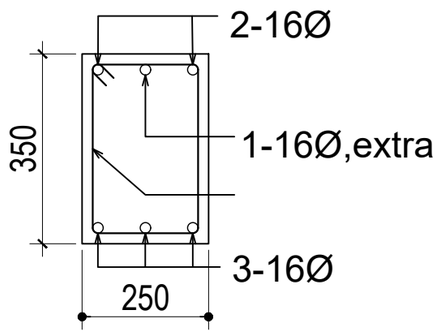

Section at support/mid span

Beam Section at Plinth Beam Level along Frames 1 & 2

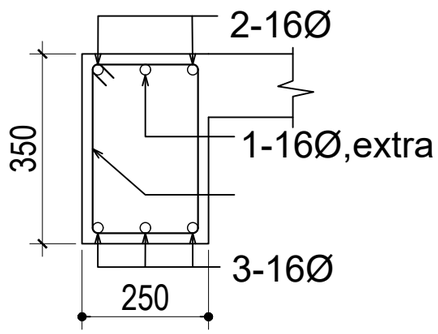

Section at support/mid span

Beam Section at Roof Slab Level along Frames 1 & 2

ROYAL GOVERNMENT OF BHUTAN
MINISTRY OF INFRASTRUCTURE AND TRANSPORT

DEPARTMENT OF INFRASTRUCTURE DEVELOPMENT
INFRASTRUCTURE DESIGN DIVISION

Notes:
-All dimensions are in mm unless specified otherwise.
-All dimensions measure unfinished surfaces unless specified otherwise.
-All dimensions are to be read and not scaled off.
- Any discrepancies in drawings should immediately be brought to the notice of the design team

PROJECT TITLE:
TOILET FOR SCHOOLS-HPL (GIRLS-7 UNITS)

REV	DATE	DESCRIPTION
1	Jan/2025	1. Cubicle partitions changed to 18mm thick HPL boards. 2. Cubicle doors changed to 18mm thick HPL doors. 3. Granite flooring changed to anti-skid floor tiles. 4. Steel Gate changed to doors with WPC frame & PVC shutter. 5. WPC door shutter changed to PVC shutter. 6. Cement board ceilings (both internal & soffit) changed to PVC ceiling. 7. MS ceiling framing changed to Manufacturer's framing system for PVC ceiling. 8. Internal wall & ceiling finish changed to water-proof plastic paint. 9. Wall tiles included in the passage/corridor area and wash basin wall area. 10. Plinth protection & drain updated as per porch roof coverage.

DRAWING TITLE: BEAM LAYOUT PLAN AND SECTION DETAIL

DESIGNED BY:	DRAWN BY:	CHECKED BY:	SCALE:
(DAWA WANGMO) PRINCIPAL ENGINEER	(DAWA WANGMO) PRINCIPAL ENGINEER	(TSHERING CHODEN) CHIEF ARCHITECT	NTS
REVIEWED & APPROVED BY:	DATE:	DRAWING NO.	
(TSHERING CHODEN) CHIEF ARCHITECT	MARCH/2024	TLT-HPL-7/STR/08	

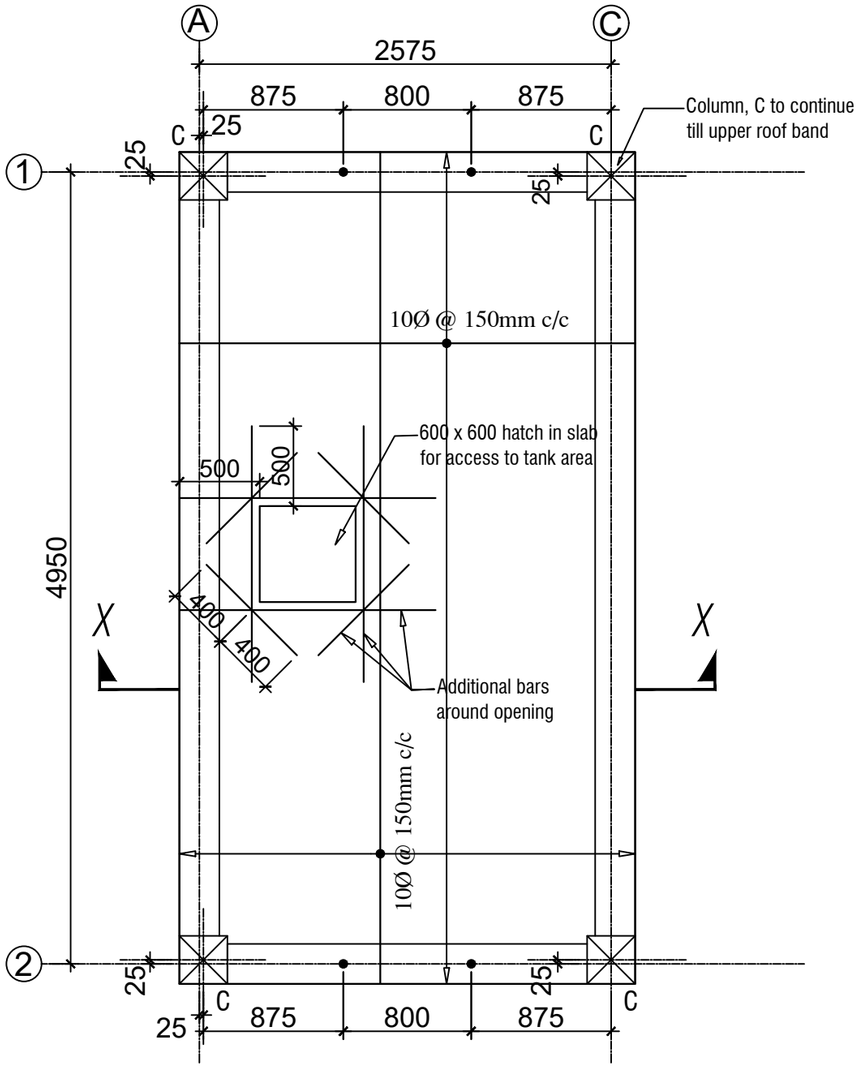

TANK SLAB REINFORCEMENT LAYOUT (BOTTOM REBARS)

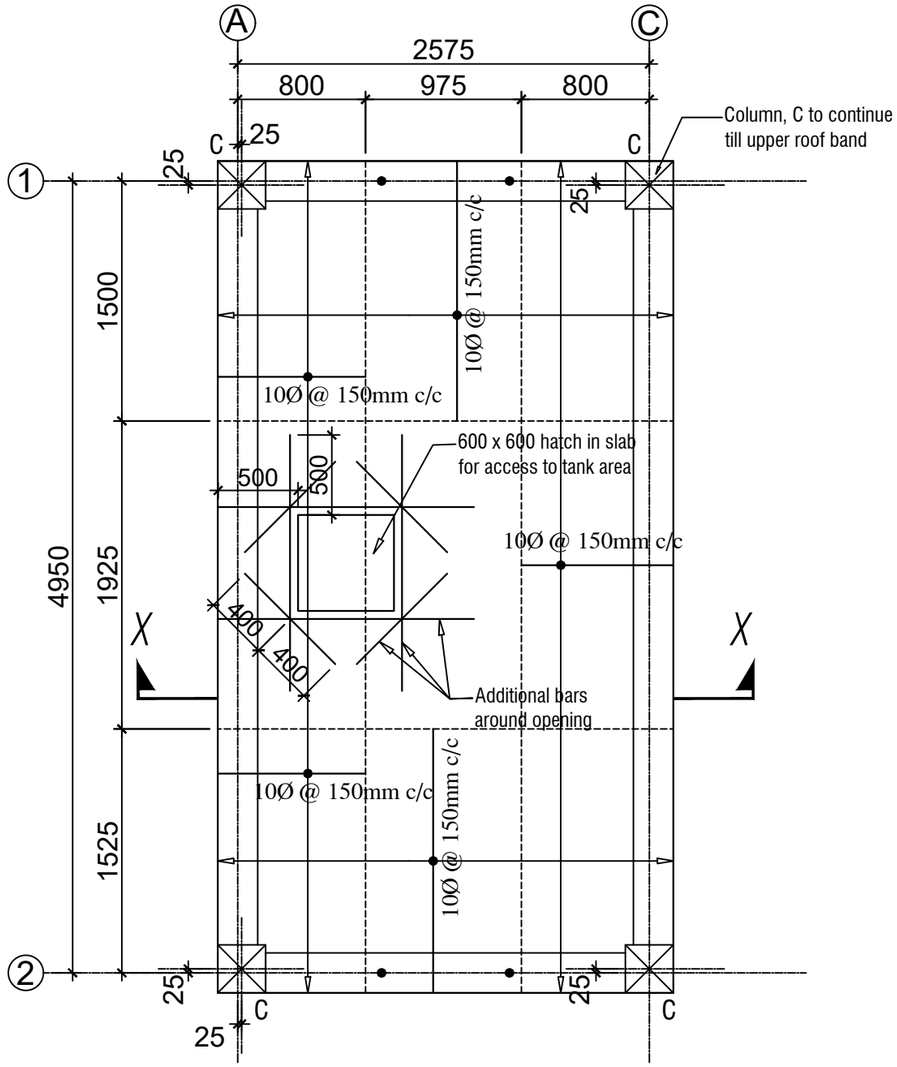

TANK SLAB REINFORCEMENT LAYOUT (TOP REBARS)

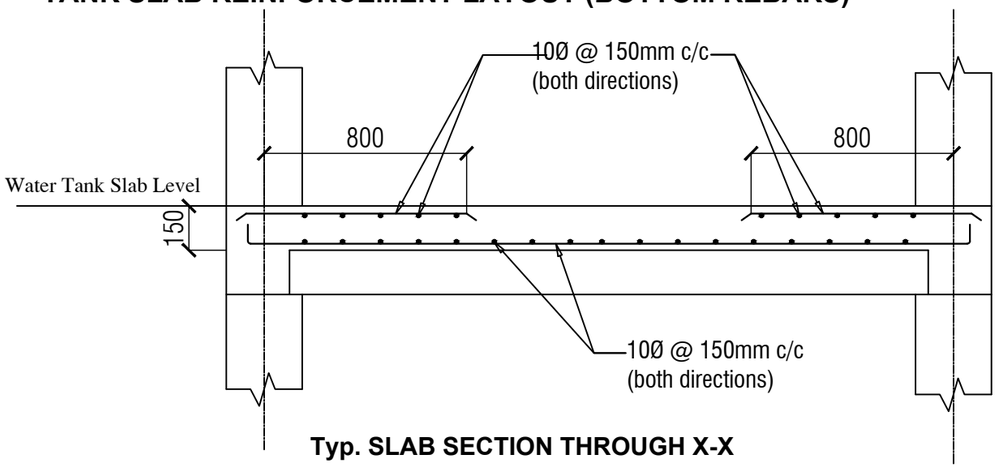

Typ. SLAB SECTION THROUGH X-X

NOTES: -
Grade of Concrete - M20
Grade of Steel - Fe 500 with 14% Elongation
Clear cover of slab =25mm
Slab thickness = 150mm

ROYAL GOVERNMENT OF BHUTAN
MINISTRY OF INFRASTRUCTURE AND TRANSPORT

DEPARTMENT OF INFRASTRUCTURE DEVELOPMENT
INFRASTRUCTURE DESIGN DIVISION

Notes:
-All dimensions are in mm unless specified otherwise.
-All dimensions measure unfinished surfaces unless specified otherwise.
-All dimensions are to be read and not scaled off.
- Any discrepancies in drawings should immediately be brought to the notice of the design team

PROJECT TITLE:
TOILET FOR SCHOOLS-HPL
(GIRLS-7 UNITS)

REV	DATE	DESCRIPTION
1	Jan/2025	1. Cubicle partitions changed to 18mm thick HPL boards. 2. Cubicle doors changed to 18mm thick HPL doors. 3. Granite flooring changed to anti-skid floor tiles. 4. Steel Gate changed to doors with WPC frame. & PVC shutter. 5. WPC door shutter changed to PVC shutter. 6. Cement board ceilings (both internal & sofit) changed to PVC ceiling. 7. MS ceiling framing changed to Manufacturer's framing system for PVC ceiling. 8. Internal wall & ceiling finish changed to water-proof plastic paint. 9. Wall tiles included in the passage/corridor area and wash basin wall area. 10. Plinth protection & drain updated as per porch roof coverage.

DRAWING TITLE: TANK SLAB REINFORCEMENT DETAIL

DESIGNED BY:	DRAWN BY:	CHECKED BY:	SCALE:
(DAWA WANGMO) PRINCIPAL ENGINEER	(DAWA WANGMO) PRINCIPAL ENGINEER	(TSHERING CHODEN) CHIEF ARCHITECT	NTS
REVIEWED & APPROVED BY: (TSHERING CHODEN) CHIEF ARCHITECT	DATE: MARCH/2024	DRAWING NO. TLT-HPL-7/STR/09	

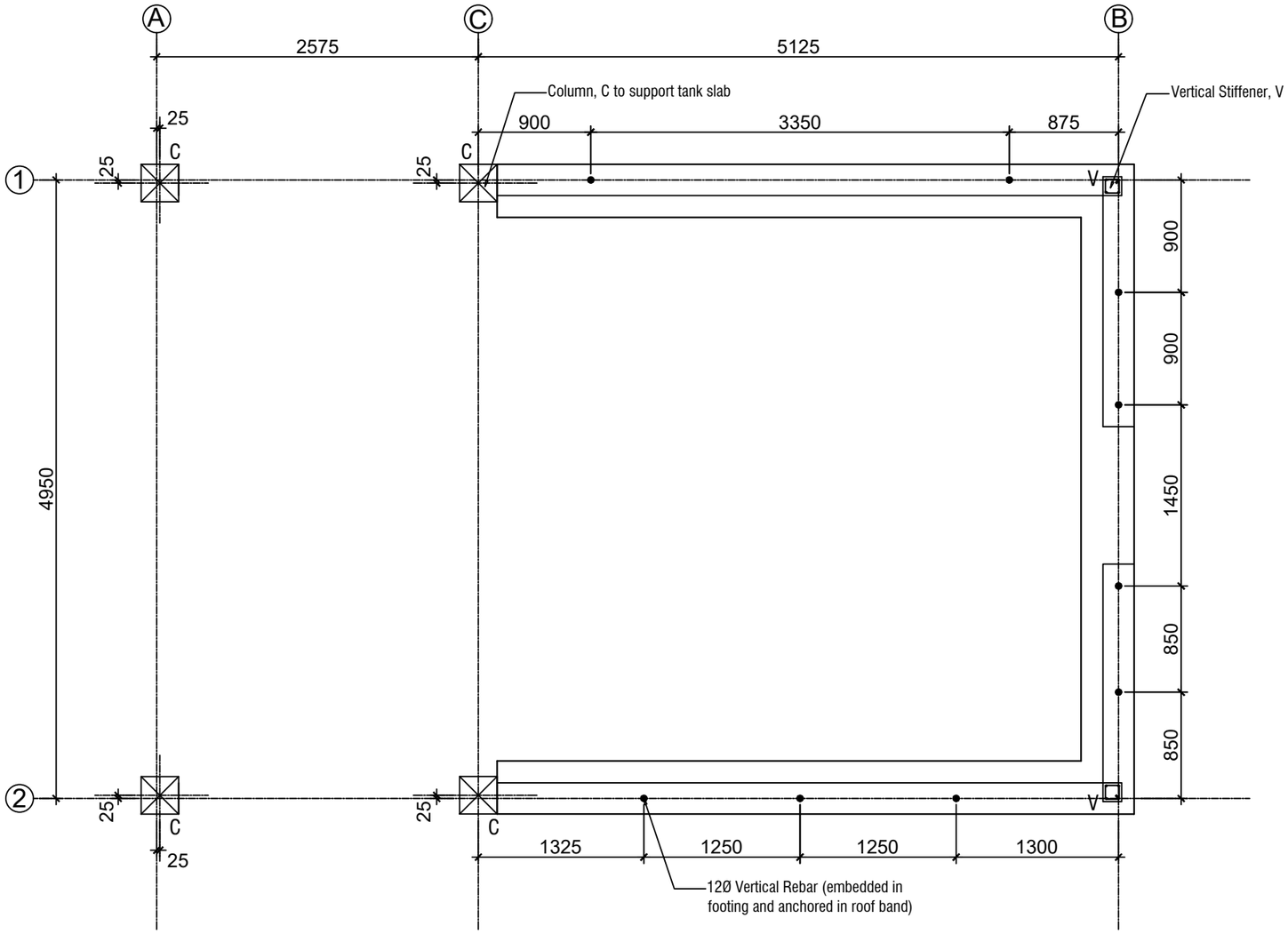

PLINTH BAND LAYOUT PLAN WITH VERTICAL REBARS POSITIONS

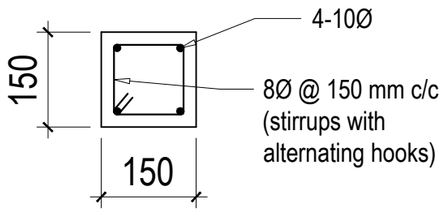

Vertical Stiffener, V

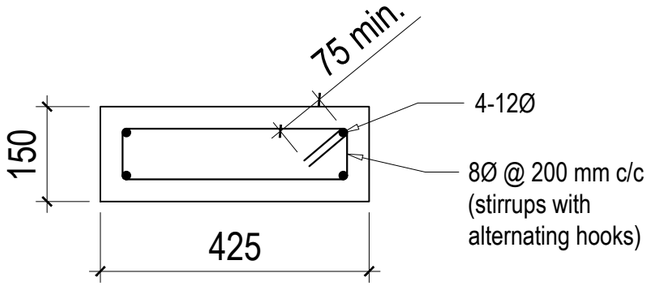

Plinth Band section

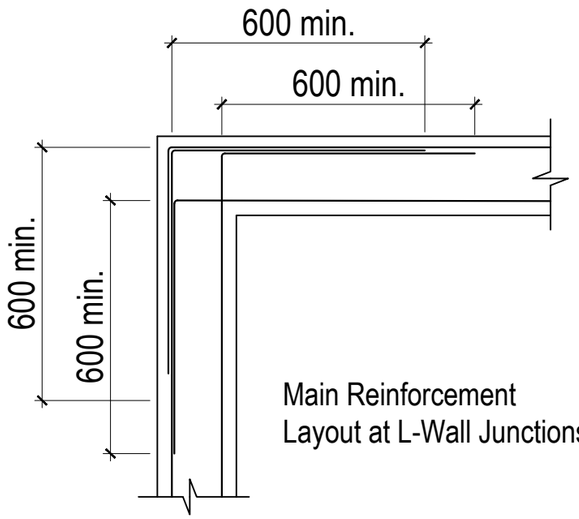

Main Reinforcement
Layout at L-Wall Junctions

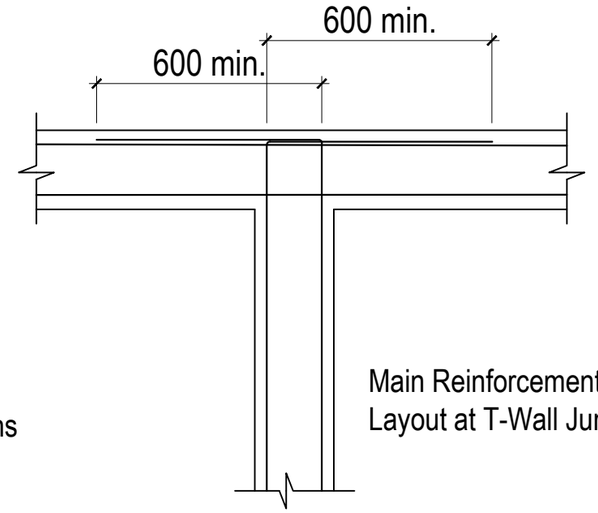

Main Reinforcement
Layout at T-Wall Junctions

ROYAL GOVERNMENT OF BHUTAN
MINISTRY OF INFRASTRUCTURE AND TRANSPORT

DEPARTMENT OF INFRASTRUCTURE DEVELOPMENT
INFRASTRUCTURE DESIGN DIVISION

Notes:
-All dimensions are in mm unless specified otherwise.
-All dimensions measure unfinished surfaces unless specified otherwise.
-All dimensions are to be read and not scaled off.
- Any discrepancies in drawings should immediately be brought to the notice of the design team

PROJECT TITLE:

TOILET FOR SCHOOLS-HPL
(GIRLS-7 UNITS)

REV	DATE	DESCRIPTION
1	Jan/2025	1. Cubicle partitions changed to 18mm thick HPL boards. 2. Cubicle doors changed to 18mm thick HPL doors. 3. Granite flooring changed to anti-skid floor tiles. 4. Steel Gate changed to doors with WPC frame & PVC shutter. 5. WPC door shutter changed to PVC shutter. 6. Cement board ceilings (both internal & soffit) changed to PVC ceiling. 7. MS ceiling framing changed to Manufacturer's framing system for PVC ceiling. 8. Internal wall & ceiling finish changed to water-proof plastic paint. 9. Wall tiles included in the passage/corridor area and wash basin wall area. 10. Plinth protection & drain updated as per porch roof coverage.

DRAWING TITLE: PLINTH BAND LAYOUT PLAN AND DETAIL

DESIGNED BY:	DRAWN BY:	CHECKED BY:	SCALE:
(DAWA WANGMO) PRINCIPAL ENGINEER	(DAWA WANGMO) PRINCIPAL ENGINEER	(TSHERING CHODEN) CHIEF ARCHITECT	NTS
REVIEWED & APPROVED BY:	DATE:	DRAWING NO.	
(TSHERING CHODEN) CHIEF ARCHITECT	MARCH/2024	TLT-HPL-7/STR/10	

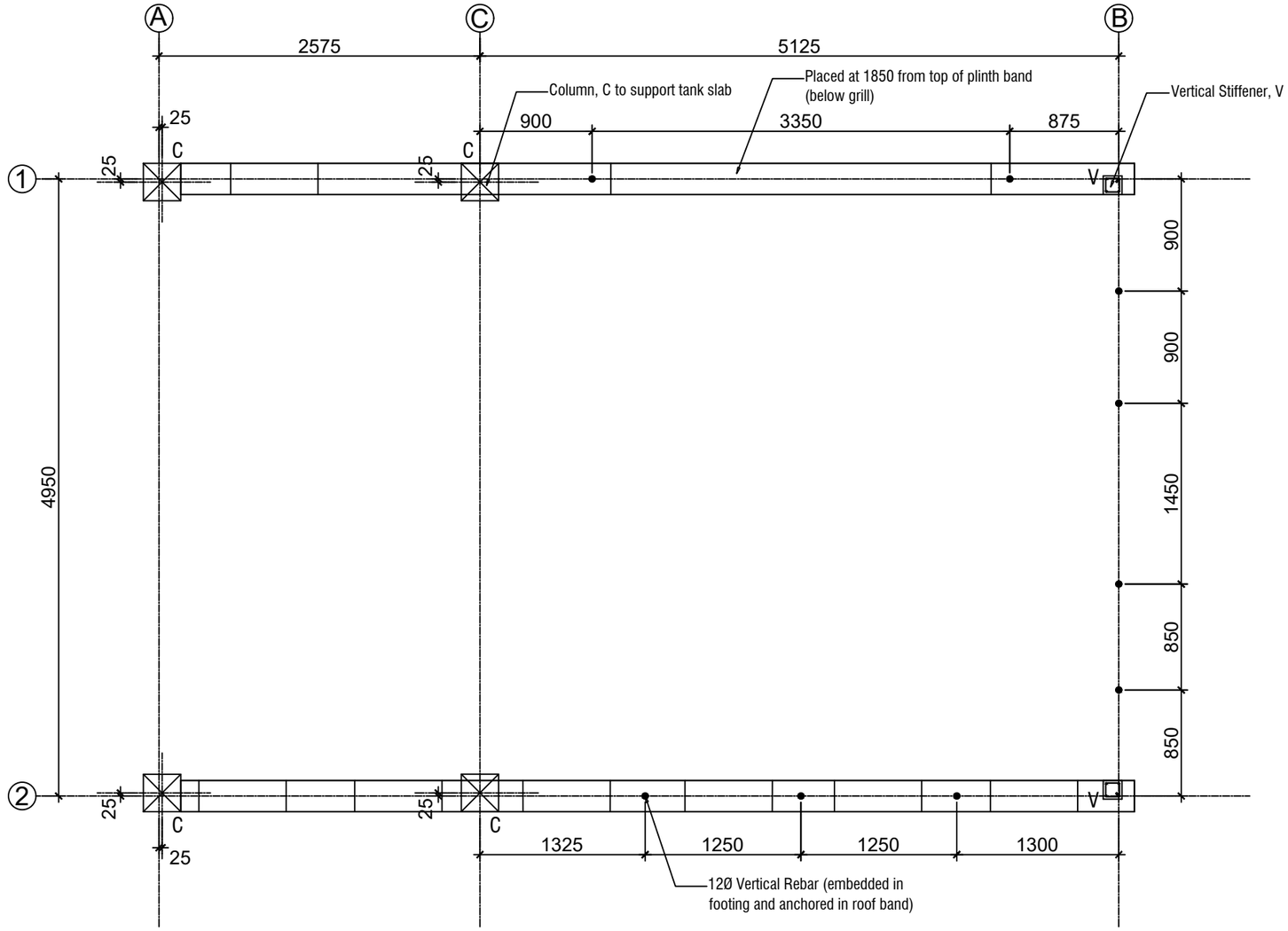

SILL BAND LAYOUT PLAN

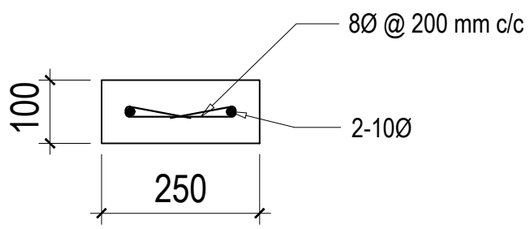

Sill band section

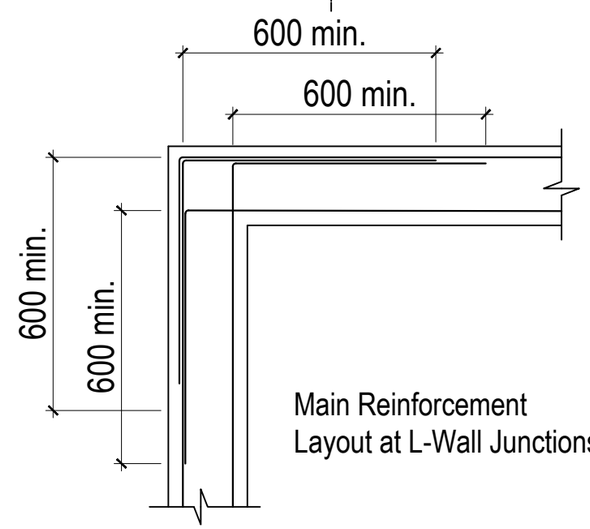

Main Reinforcement
Layout at L-Wall Junctions

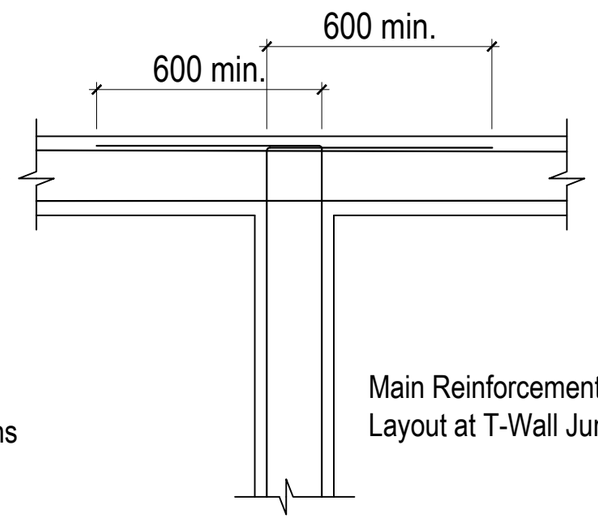

Main Reinforcement
Layout at T-Wall Junctions

ROYAL GOVERNMENT OF BHUTAN
MINISTRY OF INFRASTRUCTURE AND TRANSPORT

DEPARTMENT OF INFRASTRUCTURE DEVELOPMENT
INFRASTRUCTURE DESIGN DIVISION

Notes:
-All dimensions are in mm unless specified otherwise.
-All dimensions measure unfinished surfaces unless specified otherwise.
-All dimensions are to be read and not scaled off.
- Any discrepancies in drawings should immediately be brought to the notice of the design team

PROJECT TITLE:
TOILET FOR SCHOOLS-HPL
(GIRLS-7 UNITS)

REV	DATE	DESCRIPTION
1	Jan/2025	1. Cubicle partitions changed to 18mm thick HPL boards. 2. Cubicle doors changed to 18mm thick HPL doors. 3. Granite flooring changed to anti-skid floor tiles. 4. Steel Gate changed to doors with WPC frame & PVC shutter. 5. WPC door shutter changed to PVC shutter. 6. Cement board ceilings (both internal & sofit) changed to PVC ceiling. 7. MS ceiling framing changed to Manufacturer's framing system for PVC ceiling. 8. Internal wall & ceiling finish changed to water-proof plastic paint. 9. Wall tiles included in the passage/corridor area and wash basin wall area. 10. Plinth protection & drain updated as per porch roof coverage.

DRAWING TITLE: SILL BAND LAYOUT PLAN AND DETAIL

DESIGNED BY:	DRAWN BY:	CHECKED BY:	SCALE:
(DAWA WANGMO) PRINCIPAL ENGINEER	(DAWA WANGMO) PRINCIPAL ENGINEER	(TSHERING CHODEN) CHIEF ARCHITECT	NTS
REVIEWED & APPROVED BY:	DATE:	DRAWING NO.	
(TSHERING CHODEN) CHIEF ARCHITECT	MARCH/2024	TLT-HPL-7/STR/11	

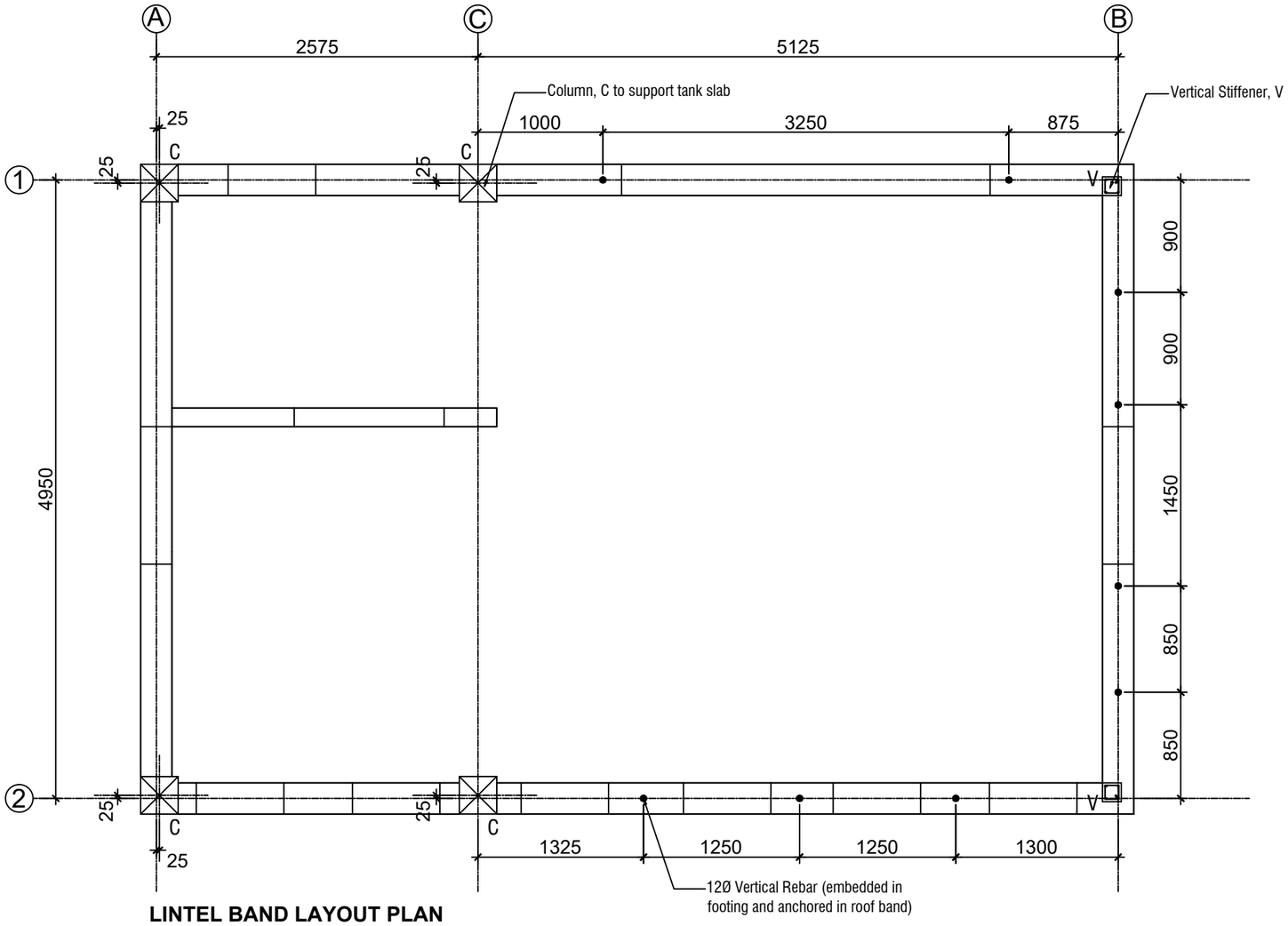

LINTEL BAND LAYOUT PLAN

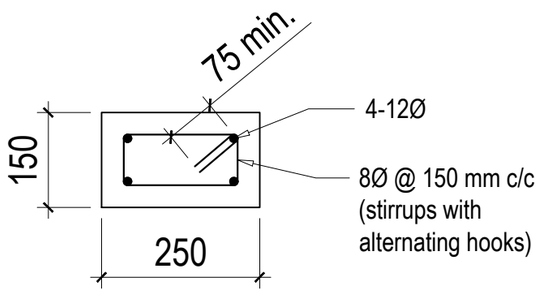

Lintel Band section for external walls

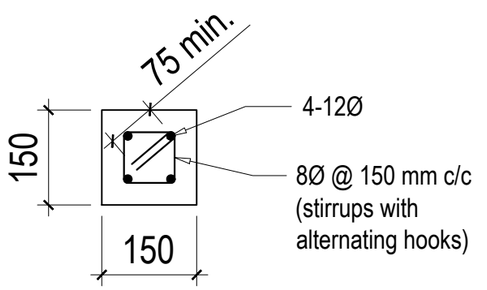

Lintel Band section for full partition walls

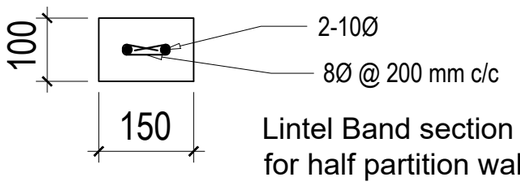

Lintel Band section
for half partition walls

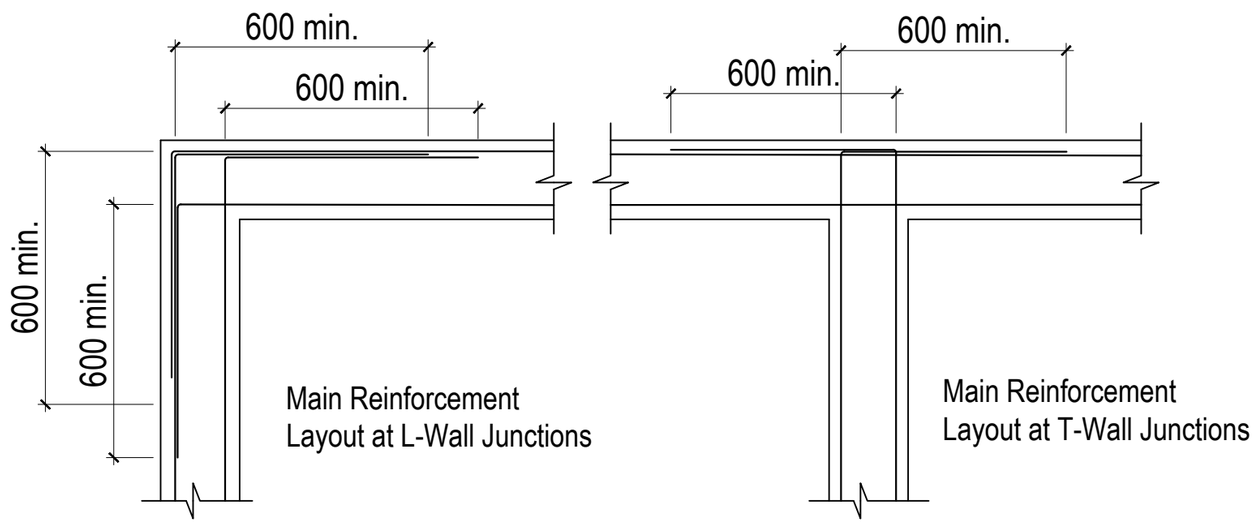

Main Reinforcement
Layout at L-Wall Junctions

Main Reinforcement
Layout at T-Wall Junctions

ROYAL GOVERNMENT OF BHUTAN
MINISTRY OF INFRASTRUCTURE AND TRANSPORT

DEPARTMENT OF INFRASTRUCTURE DEVELOPMENT
INFRASTRUCTURE DESIGN DIVISION

Notes:
-All dimensions are in mm unless specified otherwise.
-All dimensions measure unfinished surfaces unless specified otherwise.
-All dimensions are to be read and not scaled off.
- Any discrepancies in drawings should immediately be brought to the notice of the design team

PROJECT TITLE:

TOILET FOR SCHOOLS-HPL
(GIRLS-7 UNITS)

REV	DATE	DESCRIPTION
1	Jan/2025	1. Cubicle partitions changed to 18mm thick HPL boards. 2. Cubicle doors changed to 18mm thick HPL doors. 3. Granite flooring changed to anti-skid floor tiles. 4. Steel Gate changed to doors with WPC frame & PVC shutter. 5. WPC door shutter changed to PVC shutter. 6. Cement board ceilings (both internal & sofit) changed to PVC ceiling. 7. MS ceiling framing changed to Manufacturer's framing system for PVC ceiling. 8. Internal wall & ceiling finish changed to water-proof plastic paint. 9. Wall tiles included in the passage/corridor area and wash basin wall area. 10. Plinth protection & drain updated as per porch roof coverage.

DRAWING TITLE: LINTEL BAND LAYOUT PLAN AND DETAIL

DESIGNED BY:	DRAWN BY:	CHECKED BY:	SCALE:
(DAWA WANGMO) PRINCIPAL ENGINEER	(DAWA WANGMO) PRINCIPAL ENGINEER	(TSHERING CHODEN) CHIEF ARCHITECT	NTS
REVIEWED & APPROVED BY:	DATE:	DRAWING NO.	
(TSHERING CHODEN) CHIEF ARCHITECT	MARCH/2024	TLT-HPL-7/STR/12	

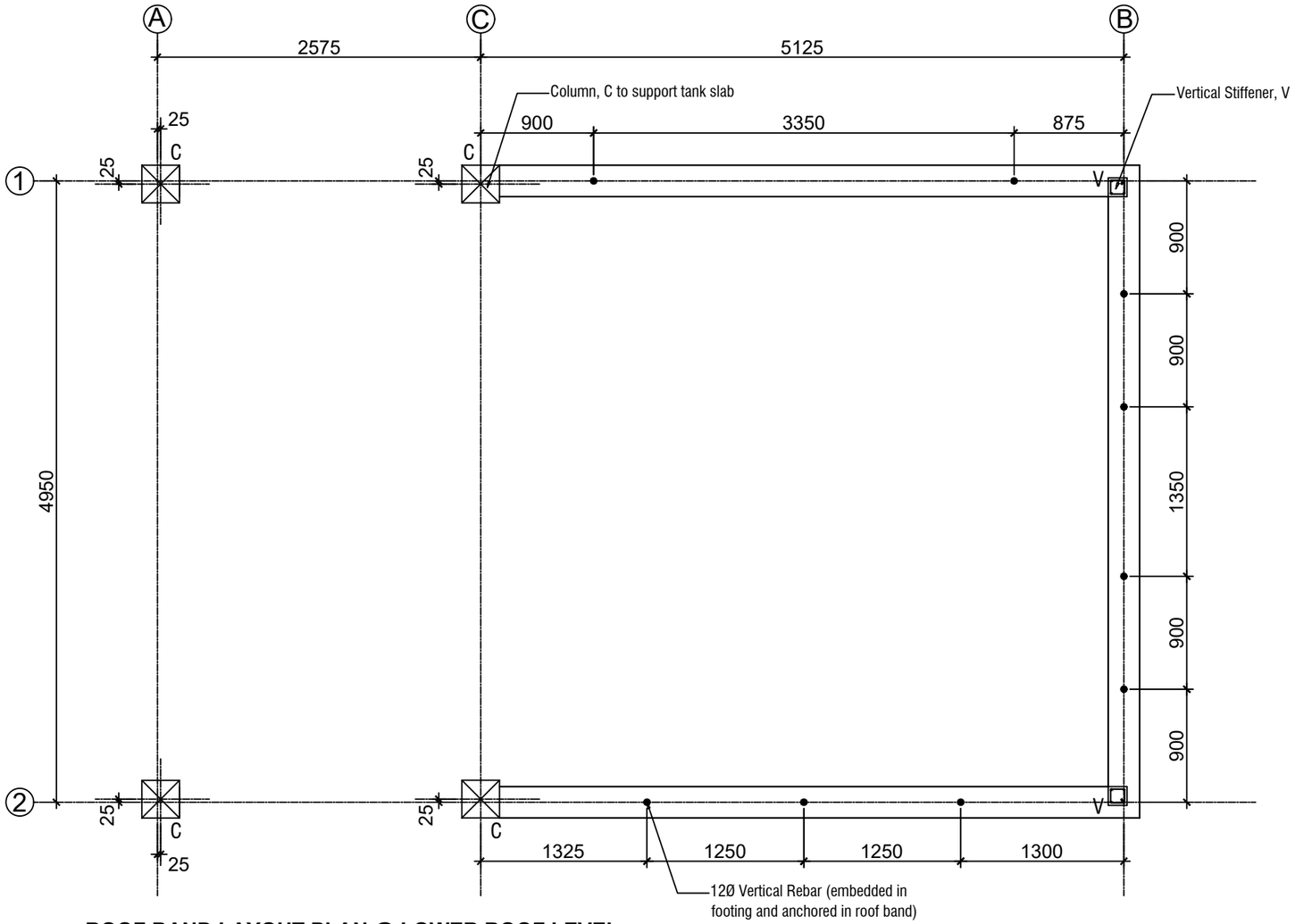

ROOF BAND LAYOUT PLAN @ LOWER ROOF LEVEL

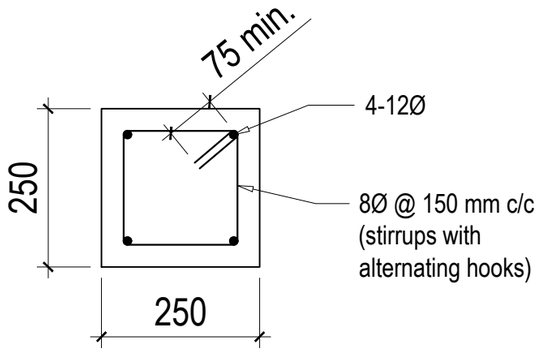

Roof Band section
for external walls

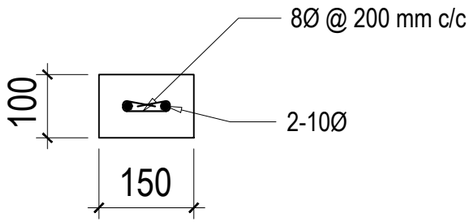

Roof Band section
for full partition walls

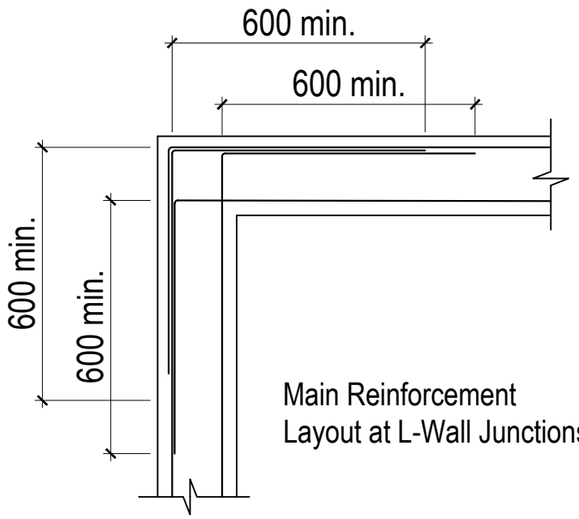

Main Reinforcement
Layout at L-Wall Junctions

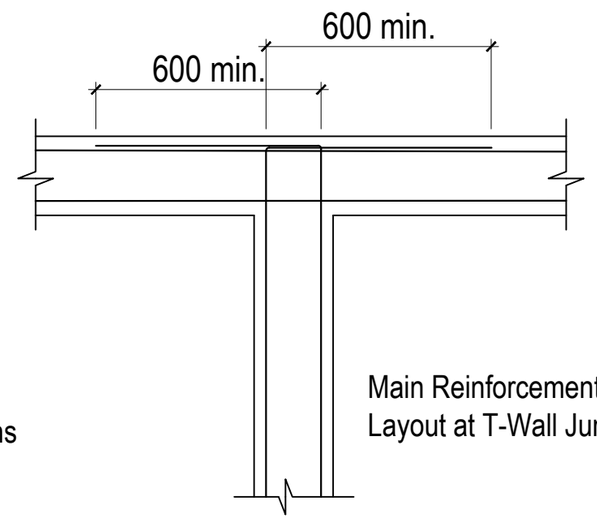

Main Reinforcement
Layout at T-Wall Junctions

ROYAL GOVERNMENT OF BHUTAN
MINISTRY OF INFRASTRUCTURE AND TRANSPORT

DEPARTMENT OF INFRASTRUCTURE DEVELOPMENT
INFRASTRUCTURE DESIGN DIVISION

Notes:
-All dimensions are in mm unless specified otherwise.
-All dimensions measure unfinished surfaces unless specified otherwise.
-All dimensions are to be read and not scaled off.
- Any discrepancies in drawings should immediately be brought to the notice of the design team

PROJECT TITLE:

TOILET FOR SCHOOLS-HPL
(GIRLS-7 UNITS)

REV	DATE	DESCRIPTION
1	Jan/2025	1. Cubicle partitions changed to 18mm thick HPL boards. 2. Cubicle doors changed to 18mm thick HPL doors. 3. Granite flooring changed to anti-skid floor tiles. 4. Steel Gate changed to doors with WPC frame & PVC shutter. 5. WPC door shutter changed to PVC shutter. 6. Cement board ceilings (both internal & sofit) changed to PVC ceiling. 7. MS ceiling framing changed to Manufacturer's framing system for PVC ceiling. 8. Internal wall & ceiling finish changed to water-proof plastic paint. 9. Wall tiles included in the passage/corridor area and wash basin wall area. 10. Plinth protection & drain updated as per porch roof coverage.

DRAWING TITLE: LOWER LEVEL ROOF BAND LAYOUT PLAN AND DETAIL

DESIGNED BY:	DRAWN BY:	CHECKED BY:	SCALE:
(DAWA WANGMO) PRINCIPAL ENGINEER	(DAWA WANGMO) PRINCIPAL ENGINEER	(TSHERING CHODEN) CHIEF ARCHITECT	NTS
REVIEWED & APPROVED BY:	DATE:	DRAWING NO.	
(TSHERING CHODEN) CHIEF ARCHITECT	MARCH/2024	TLT-HPL-7/STR/13	

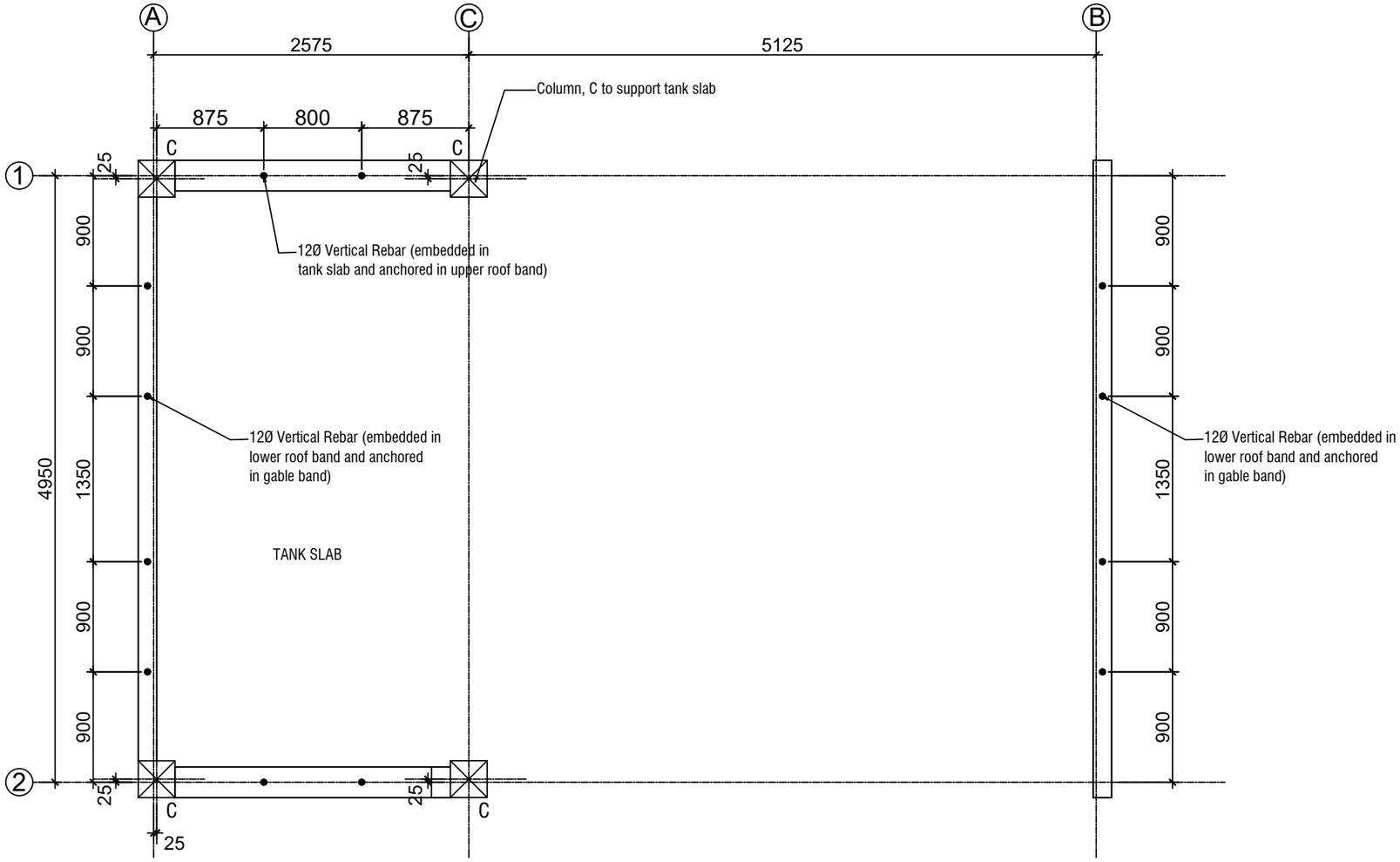

ROOF BAND LAYOUT PLAN @ UPPER ROOF LEVEL AND GABLE BAND

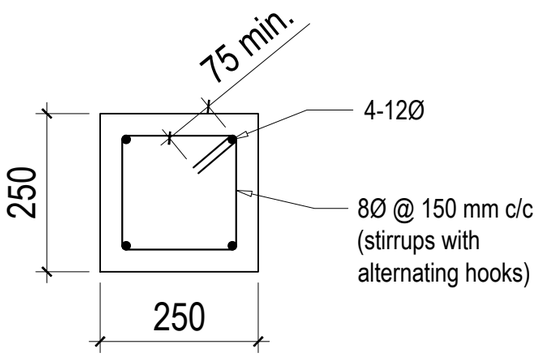

Roof Band section

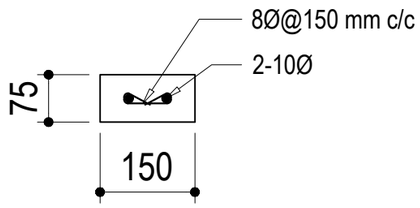

Gable band section

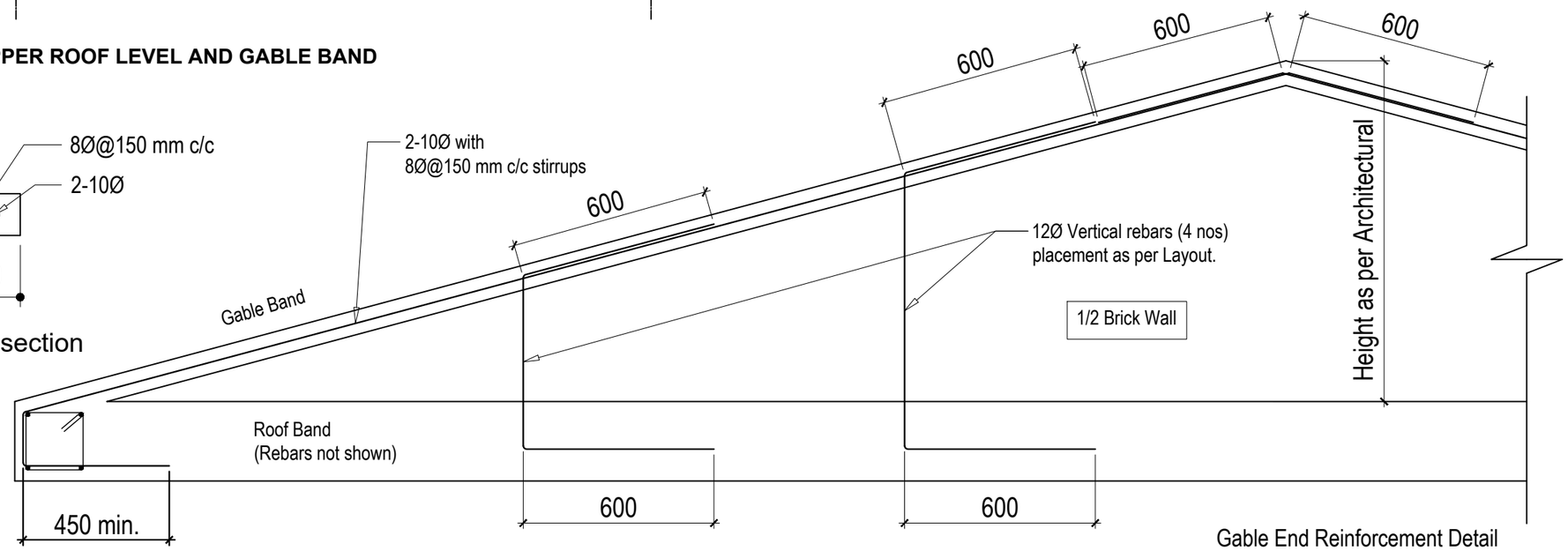

Gable End Reinforcement Detail

ROYAL GOVERNMENT OF BHUTAN
MINISTRY OF INFRASTRUCTURE AND TRANSPORT

DEPARTMENT OF INFRASTRUCTURE DEVELOPMENT
INFRASTRUCTURE DESIGN DIVISION

Notes:
-All dimensions are in mm unless specified otherwise.
-All dimensions measure unfinished surfaces unless specified otherwise.
-All dimensions are to be read and not scaled off.
- Any discrepancies in drawings should immediately be brought to the notice of the design team

PROJECT TITLE:
TOILET FOR SCHOOLS-HPL (GIRLS-7 UNITS)

REV	DATE	DESCRIPTION
1	Jan/2025	1. Cubicle partitions changed to 18mm thick HPL boards. 2. Cubicle doors changed to 18mm thick HPL doors. 3. Granite flooring changed to anti-skid floor tiles. 4. Steel Gate changed to doors with WPC frame & PVC shutter. 5. WPC door shutter changed to PVC shutter. 6. Cement board ceilings (both internal & soffit) changed to PVC ceiling. 7. MS ceiling framing changed to Manufacturer's framing system for PVC ceiling. 8. Internal wall & ceiling finish changed to water-proof plastic paint. 9. Wall tiles included in the passage/corridor area and wash basin wall area. 10. Plinth protection & drain updated as per porch roof coverage.

DRAWING TITLE: UPPER LEVEL ROOF BAND LAYOUT PLAN AND DETAIL

DESIGNED BY:	DRAWN BY:	CHECKED BY:	SCALE:
(DAWA WANGMO) PRINCIPAL ENGINEER	(DAWA WANGMO) PRINCIPAL ENGINEER	(TSHERING CHODEN) CHIEF ARCHITECT	NTS
REVIEWED & APPROVED BY: (TSHERING CHODEN) CHIEF ARCHITECT	DATE: MARCH/2024	DRAWING NO. TLT-HPL-7/STR/14	

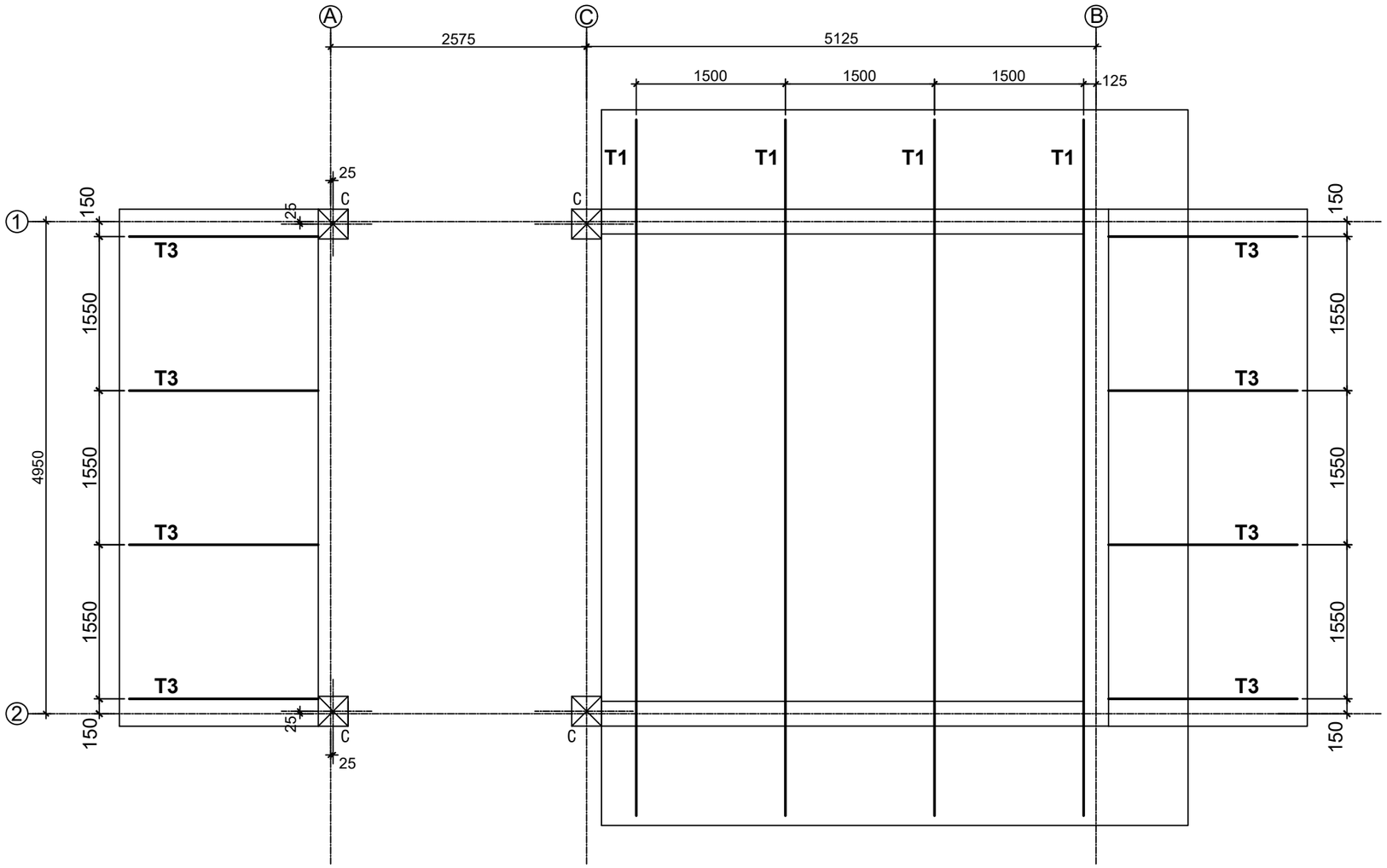

ROOF TRUSS LAYOUT PLAN @ LOWER ROOF LEVEL

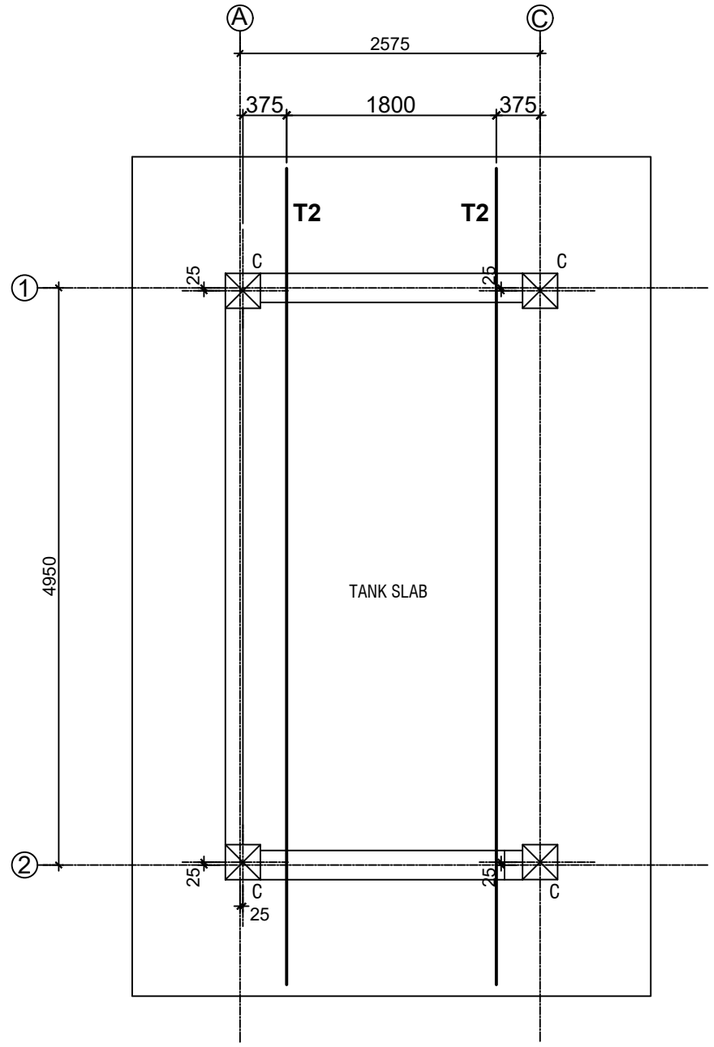

ROOF TRUSS LAYOUT PLAN @ UPPER ROOF LEVEL

ROYAL GOVERNMENT OF BHUTAN
MINISTRY OF INFRASTRUCTURE AND TRANSPORT

DEPARTMENT OF INFRASTRUCTURE DEVELOPMENT
INFRASTRUCTURE DESIGN DIVISION

Notes:
-All dimensions are in mm unless specified otherwise.
-All dimensions measure unfinished surfaces unless specified otherwise.
-All dimensions are to be read and not scaled off.
- Any discrepancies in drawings should immediately be brought to the notice of the design team

PROJECT TITLE:

TOILET FOR SCHOOLS-HPL
(GIRLS-7 UNITS)

REV	DATE	DESCRIPTION
1	Jan/2025	1. Cubicle partitions changed to 18mm thick HPL boards. 2. Cubicle doors changed to 18mm thick HPL doors. 3. Granite flooring changed to anti-skid floor tiles. 4. Steel Gate changed to doors with WPC frame & PVC shutter. 5. WPC door shutter changed to PVC shutter. 6. Cement board ceilings (both internal & sofit) changed to PVC ceiling. 7. MS ceiling framing changed to Manufacturer's framing system for PVC ceiling. 8. Internal wall & ceiling finish changed to water-proof plastic paint. 9. Wall tiles included in the passage/corridor area and wash basin wall area. 10. Plinth protection & drain updated as per porch roof coverage.

DRAWING TITLE: ROOF TRUSS LAYOUT PLAN

DESIGNED BY:	DRAWN BY:	CHECKED BY:	SCALE:
(DAWA WANGMO) PRINCIPAL ENGINEER	(DAWA WANGMO) PRINCIPAL ENGINEER	(TSHERING CHODEN) CHIEF ARCHITECT	NTS
REVIEWED & APPROVED BY:	DATE:	DRAWING NO.	
(TSHERING CHODEN) CHIEF ARCHITECT	MARCH/2024	TLT-HPL-7/STR/15	

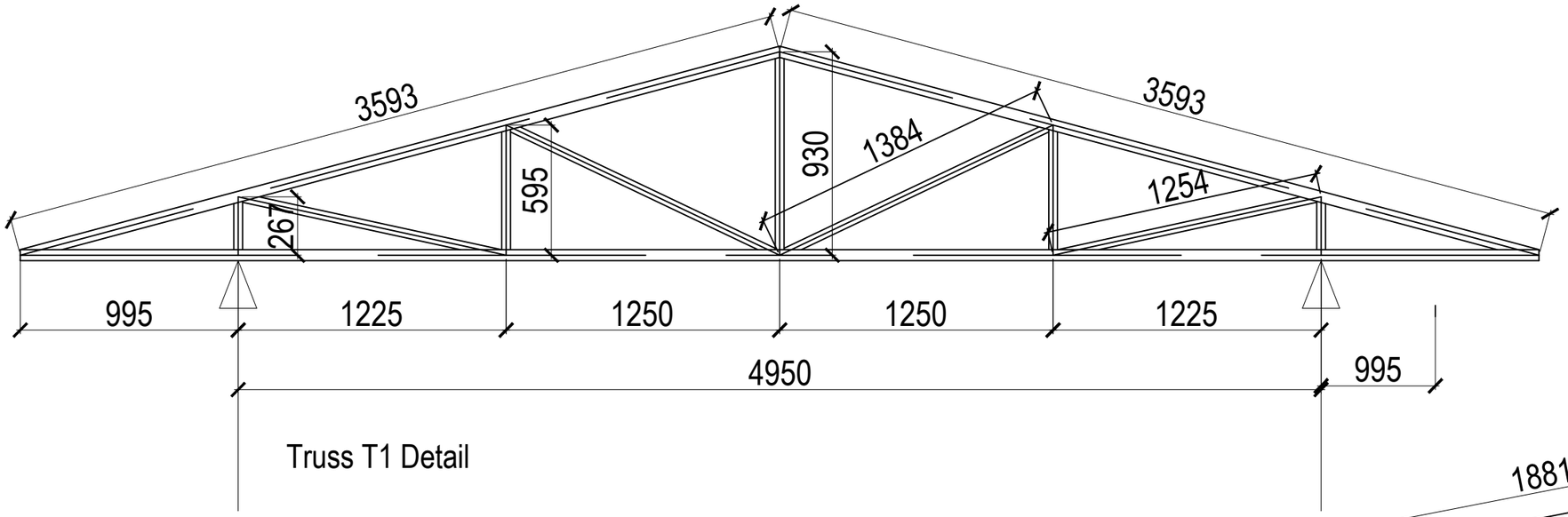

Truss T1 Detail

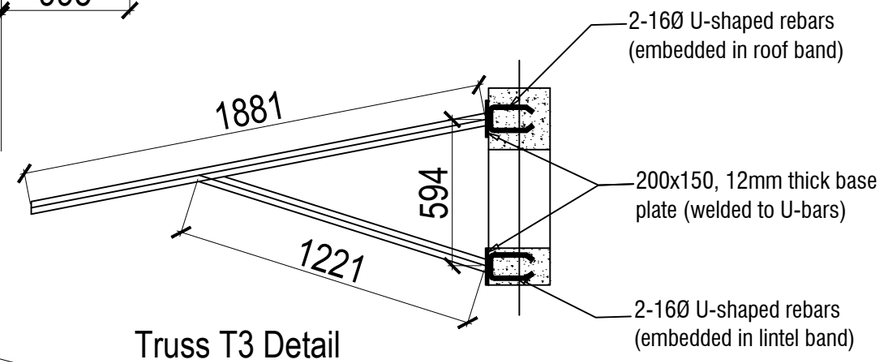

Truss T3 Detail

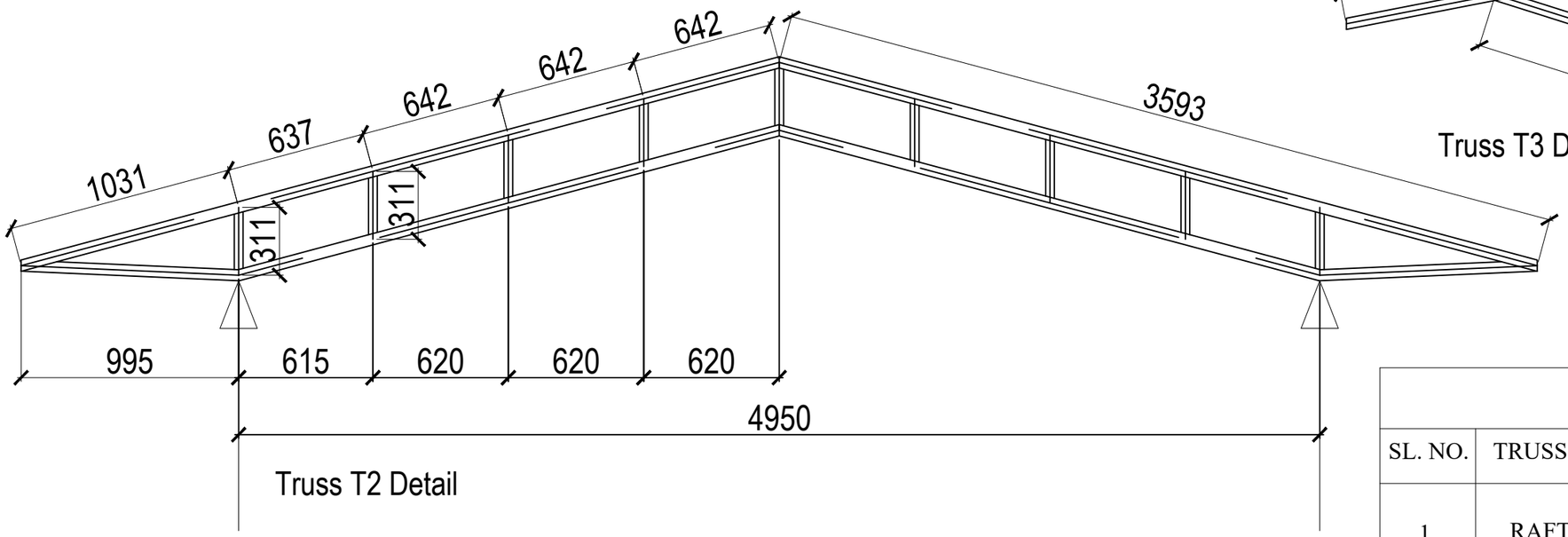

Truss T2 Detail

ROOF TRUSS MEMBER SCHEDULE		
SL. NO.	TRUSS MEMBER	MEMBER SIZE
1	RAFTER/TIE	50X50mm, 3.6mm thick medium class square tubes @ 4.93 kg/m; YST 310 GRADE
2	STRUTS	40X40mm, 3.2mm thick medium class square tubes @ 3.49 kg/m; YST 310 GRADE
3	PURLINS	50X50mm, 3.6mm thick medium class square tubes @ 4.93 kg/m; YST 310 GRADE
NOTE: PURLINS SHOULD BE PLACED @1000mm c/c minimum		

ROYAL GOVERNMENT OF BHUTAN
MINISTRY OF INFRASTRUCTURE AND TRANSPORT

DEPARTMENT OF INFRASTRUCTURE DEVELOPMENT
INFRASTRUCTURE DESIGN DIVISION

Notes:
-All dimensions are in mm unless specified otherwise.
-All dimensions measure unfinished surfaces unless specified otherwise.
-All dimensions are to be read and not scaled off.
- Any discrepancies in drawings should immediately be brought to the notice of the design team

PROJECT TITLE:
TOILET FOR SCHOOLS-HPL (GIRLS-7 UNITS)

REV	DATE	DESCRIPTION
1	Jan/2025	1. Cubicle partitions changed to 18mm thick HPL boards. 2. Cubicle doors changed to 18mm thick HPL doors. 3. Granite flooring changed to anti-skid floor tiles. 4. Steel Gate changed to doors with WPC frame & PVC shutter. 5. WPC door shutter changed to PVC shutter. 6. Cement board ceilings (both internal & sofit) changed to PVC ceiling. 7. MS ceiling framing changed to Manufacturer's framing system for PVC ceiling. 8. Internal wall & ceiling finish changed to water-proof plastic paint. 9. Wall tiles included in the passage/corridor area and wash basin wall area. 10. Plinth protection & drain updated as per porch roof coverage.

DRAWING TITLE: ROOF TRUSS MEMBER DETAIL

DESIGNED BY:	DRAWN BY:	CHECKED BY:	SCALE:
(DAWA WANGMO) PRINCIPAL ENGINEER	(DAWA WANGMO) PRINCIPAL ENGINEER	(TSHERING CHODEN) CHIEF ARCHITECT	NTS
REVIEWED & APPROVED BY:	DATE:	DRAWING NO.	
(TSHERING CHODEN) CHIEF ARCHITECT	MARCH/2024	TLT-HPL-7/STR/16	

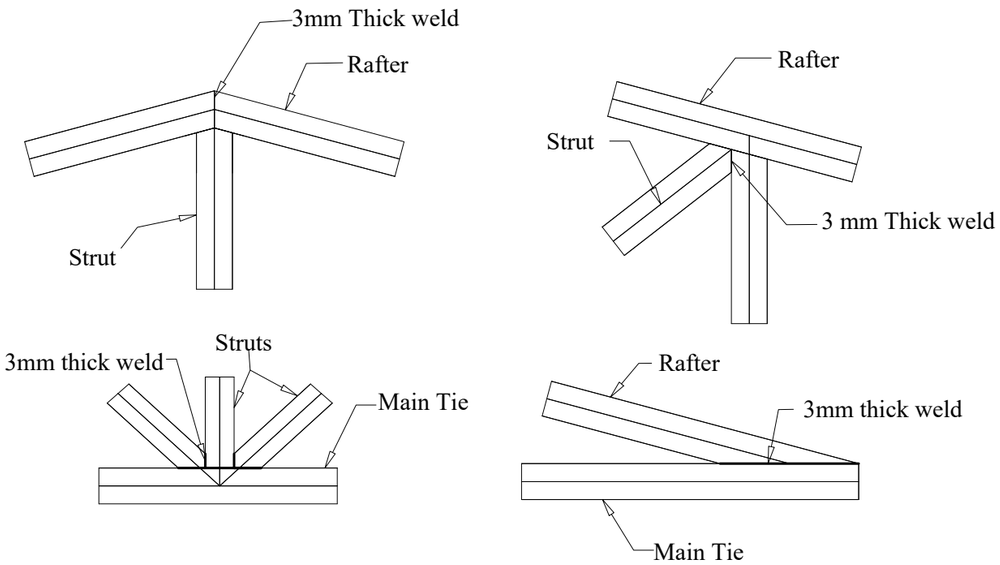

TRUSS MEMBER WELD CONNECTION DETAILS

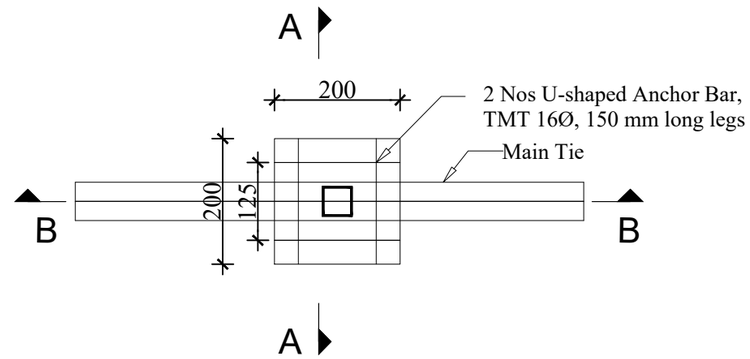

TRUSS HOLDING DOWN DETAILS

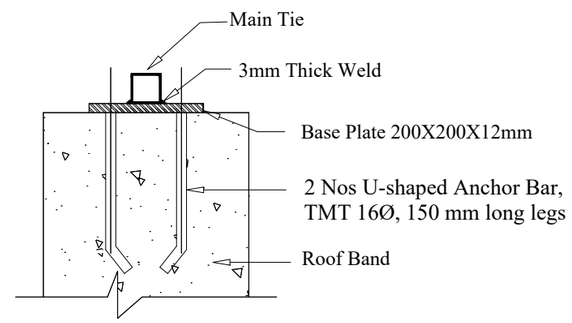

SECTION A-A

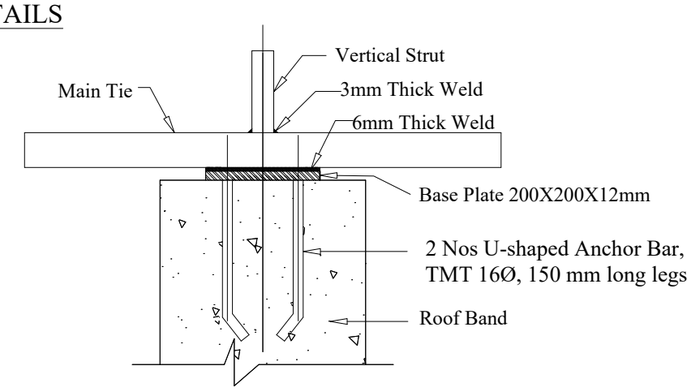

SECTION B-B

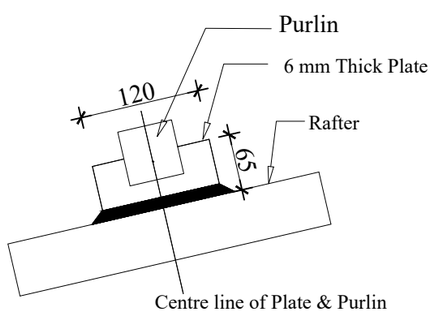

PURLIN CLEAT

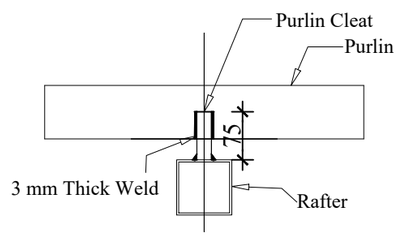

CONNECTION OF PURLIN TO RAFTER

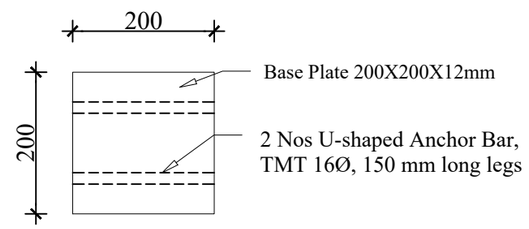

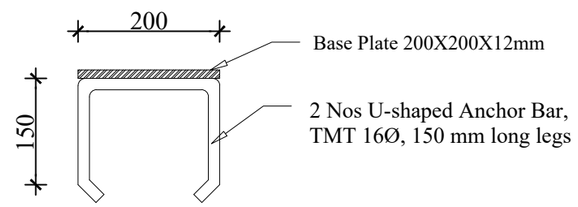

TRUSS HOLDING DOWN BASE PLATE DETAILS

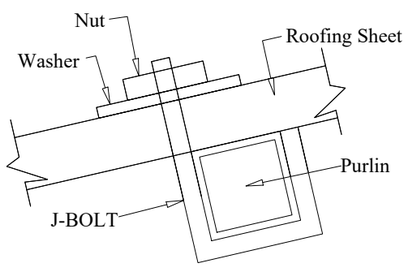

CONNECTION OF ROOFING SHEET TO PURLIN

NOTE:

1) All dimensions are in mm unless stated otherwise.
2) Connection details shown are for different types of joints and to be taken same for similar joints.
3) Height of Truss prop (if any) to be taken as per architectural drawing.
4) All members of truss joint shall be in welding.
5) Fabrication of truss must be done at site.
6) Welding shall conform to IS 816-1989 and thickness shall be 3mm.
7) All Steel Tube Sections and Plates shall conform to IS 1161-1968 & IS 2062-1984.
8) All MS Nuts & Bolts shall conform to IS 1363-1984 and Washers shall conform to IS 5374-1975.

ROYAL GOVERNMENT OF BHUTAN
MINISTRY OF INFRASTRUCTURE AND TRANSPORT

DEPARTMENT OF INFRASTRUCTURE DEVELOPMENT
INFRASTRUCTURE DESIGN DIVISION

Notes:
-All dimensions are in mm unless specified otherwise.
-All dimensions measure unfinished surfaces unless specified otherwise.
-All dimensions are to be read and not scaled off.
- Any discrepancies in drawings should immediately be brought to the notice of the design team

PROJECT TITLE:
TOILET FOR SCHOOLS-HPL
(GIRLS-7 UNITS)

REV	DATE	DESCRIPTION
1	Jan/2025	1. Cubicle partitions changed to 18mm thick HPL boards. 2. Cubicle doors changed to 18mm thick HPL doors. 3. Granite flooring changed to anti-skid floor tiles. 4. Steel Gate changed to doors with WPC frame & PVC shutter. 5. WPC door shutter changed to PVC shutter. 6. Cement board ceilings (both internal & sofit) changed to PVC ceiling. 7. MS ceiling framing changed to Manufacturer's framing system for PVC ceiling. 8. Internal wall & ceiling finish changed to water-proof plastic paint. 9. Wall tiles included in the passage/corridor area and wash basin wall area. 10. Plinth protection & drain updated as per porch roof coverage.

DRAWING TITLE: ROOF TRUSS FIXING AND MEMBER CONNECTION DETAIL

DESIGNED BY:	DRAWN BY:	CHECKED BY:	SCALE:
(DAWA WANGMO) PRINCIPAL ENGINEER	(DAWA WANGMO) PRINCIPAL ENGINEER	(TSHERING CHODEN) CHIEF ARCHITECT	NTS
REVIEWED & APPROVED BY:	DATE:	DRAWING NO.	
(TSHERING CHODEN) CHIEF ARCHITECT	MARCH/2024	TLT-HPL-7/STR/17	

MOIT

MINISTRY OF INFRASTRUCTURE AND TRANSPORT

DEPARTMENT OF INFRASTRUCTURE DEVELOPMENT
INFRASTRUCTURE DESIGN DIVISION

ELECTRICAL DRAWINGS
Toilet for Schools-HPL PARTITION
(Girls 7 Units)

JANUARY/2025 (REVISION)

Legends & Notes

Sl No	Symbols	Description of symbols	Qty
1	MDB	Main Distribution Board	1
2		Light Switch boards	4
3	20W LED TL	20W LED batten tube light fitting	4
4	BH	Batten holder with LED 12W bulb	6
5	EF	Exhaust fan	4

Notes 1:

1. Light points wiring shall be with 1.5sq.mm PVC insulated insulated copper conductor
2. Light circuit wiring shall be with 2.5sq.mm PVC insulated copper conductor
3. Light switchboards shall be 1400mm from finished floor level to top.
4. MDB will be fixed at 2.3m above vertical finished floor level.

ROYAL GOVERNMENT OF BHUTAN
MINISTRY OF INFRASTRUCTURE AND TRANSPORT

DEPARTMENT OF INFRASTRUCTURE DEVELOPMENT
INFRASTRUCTURE DESIGN DIVISION

Notes:
-All dimensions are in mm unless specified otherwise.
-All dimensions measure unfinished surfaces unless specified otherwise.
-All dimensions are to be read and not scaled off.
- Any discrepancies in drawings should immediately be brought to the notice of the design team

PROJECT TITLE:
TOILET FOR SCHOOLS-HPL
(GIRLS-7 UNITS)

REV	DATE	DESCRIPTION
1	Jan/2025	Changes in Architectural only.
2		
3		
4		
5		

DRAWING TITLE: NOTES & LEGENDS

DESIGNED BY:	DRAWN BY:	CHECKED BY:	SCALE:
(NAMGAY RINCHEN) ELECTRICAL ENGINEER	(NAMGAY RINCHEN) ELECTRICAL ENGINEER	(TSHERING CHODEN) CHIEF ARCHITECT	NTS
REVIEWED & APPROVED BY: (TSHERING CHODEN) CHIEF ARCHITECT	DATE: DECEMBER/2023	DRAWING NO. TLT-HPL-7/ELE/01	

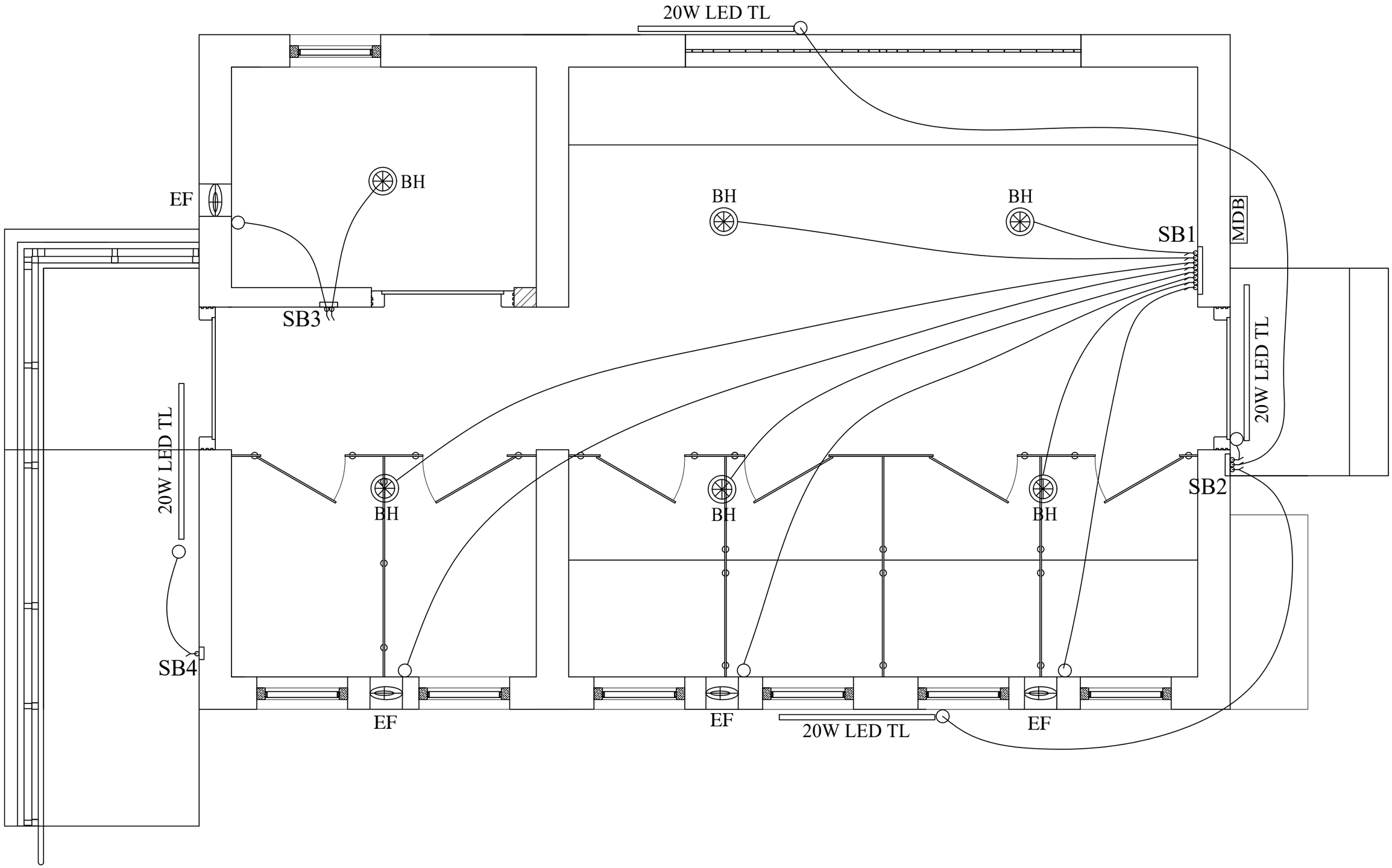

ROYAL GOVERNMENT OF BHUTAN
MINISTRY OF INFRASTRUCTURE AND TRANSPORT

DEPARTMENT OF INFRASTRUCTURE DEVELOPMENT
INFRASTRUCTURE DESIGN DIVISION

Notes:
-All dimensions are in mm unless specified otherwise.
-All dimensions measure unfinished surfaces unless specified otherwise.
-All dimensions are to be read and not scaled off.
- Any discrepancies in drawings should immediately be brought to the notice of the design team

PROJECT TITLE:

TOILET FOR SCHOOLS
(GIRLS-7 UNITS)

REV	DATE	DESCRIPTION
1	Jan/2025	Changes in Architectural only.
2		
3		
4		
5		

DRAWING TITLE: FITTINGS & CIRCUITS LAYOUT

DESIGNED BY:	DRAWN BY:	CHECKED BY:	SCALE:
(NAMGAY RINCHEN) ELECTRICAL ENGINEER	(NAMGAY RINCHEN) ELECTRICAL ENGINEER	(TSHERING CHODEN) CHIEF ARCHITECT	NTS
REVIEWED & APPROVED BY: (TSHERING CHODEN) CHIEF ARCHITECT	DATE: DECEMBER/2023	DRAWING NO. TLT-HPL-7/ELE/02	

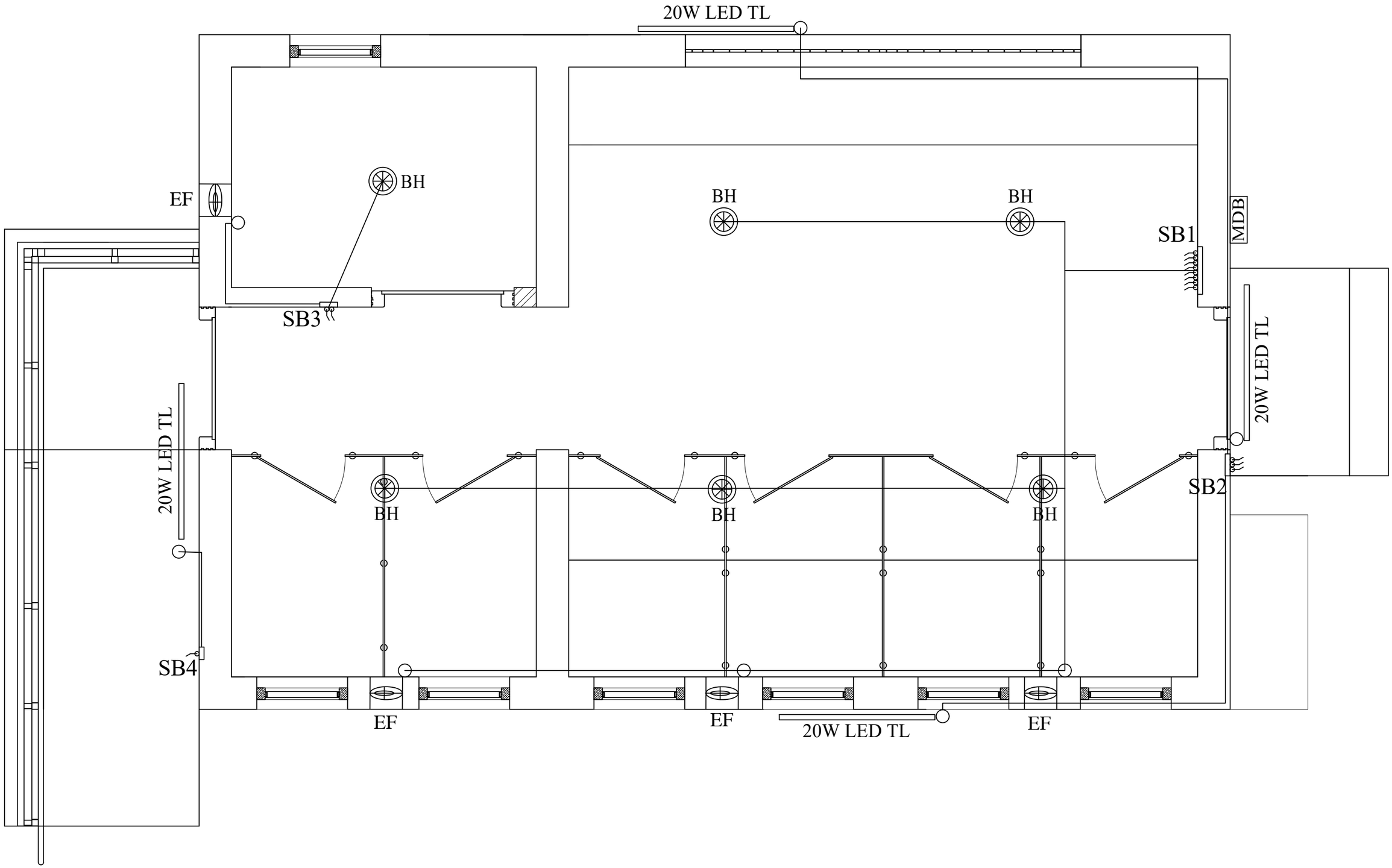

ROYAL GOVERNMENT OF BHUTAN
MINISTRY OF INFRASTRUCTURE AND TRANSPORT

DEPARTMENT OF INFRASTRUCTURE DEVELOPMENT
INFRASTRUCTURE DESIGN DIVISION

Notes:
-All dimensions are in mm unless specified otherwise.
-All dimensions measure unfinished surfaces unless specified otherwise.
-All dimensions are to be read and not scaled off.
- Any discrepancies in drawings should immediately be brought to the notice of the design team

PROJECT TITLE:

TOILET FOR SCHOOLS
(GIRLS-7 UNITS)

REV	DATE	DESCRIPTION
1	Jan/2025	Changes in Architectural only.
2		
3		
4		
5		

DRAWING TITLE: FITTINGS & CONDUITS LAYOUT

DESIGNED BY:	DRAWN BY:	CHECKED BY:	SCALE:
(NAMGAY RINCHEN) ELECTRICAL ENGINEER	(NAMGAY RINCHEN) ELECTRICAL ENGINEER	(TSHERING CHODEN) CHIEF ARCHITECT	NTS
REVIEWED & APPROVED BY: (TSHERING CHODEN) CHIEF ARCHITECT	DATE: DECEMBER/2023	DRAWING NO. TLT-HPL-7/ELE/03	

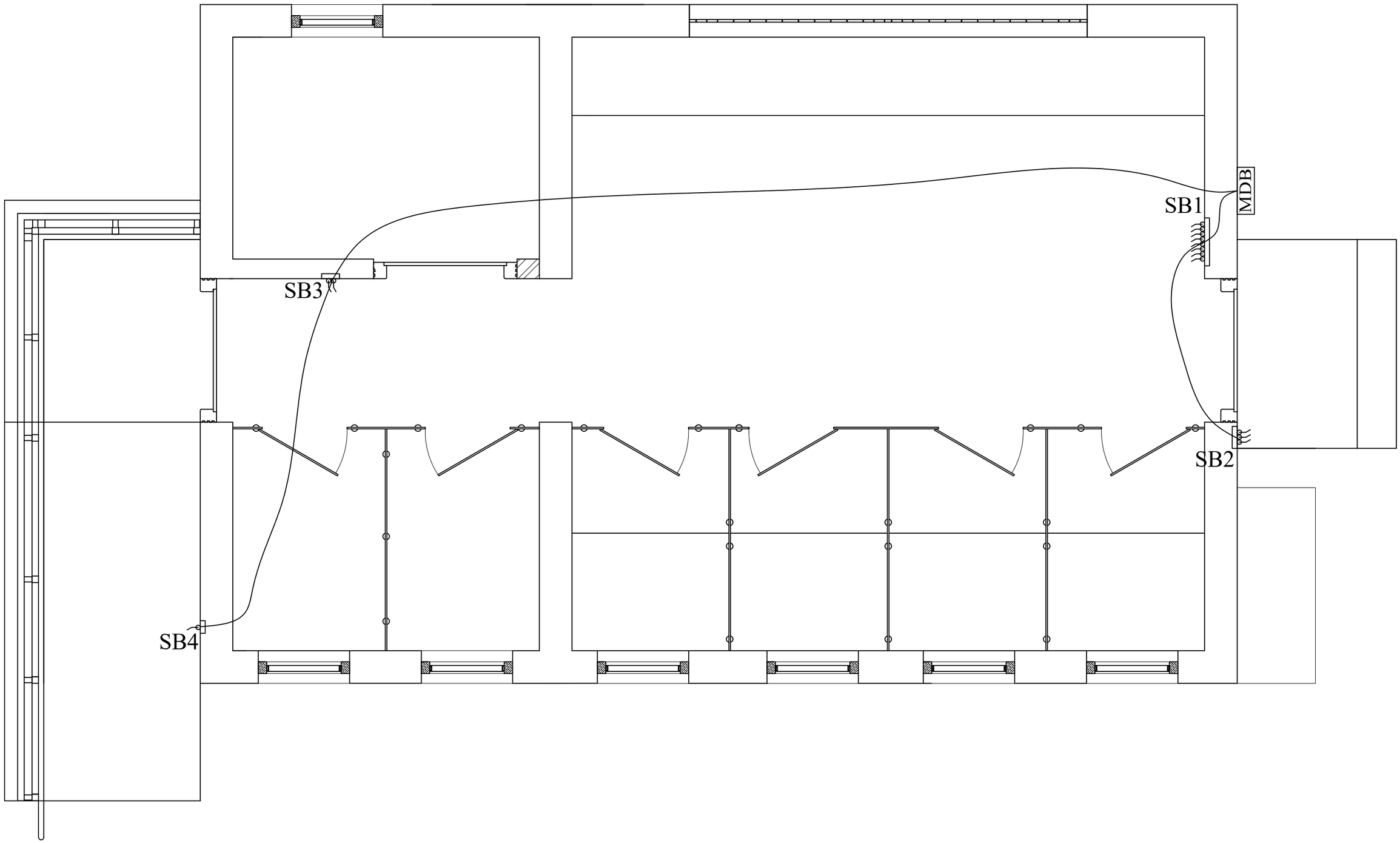

ROYAL GOVERNMENT OF BHUTAN
MINISTRY OF INFRASTRUCTURE AND TRANSPORT

DEPARTMENT OF INFRASTRUCTURE DEVELOPMENT
INFRASTRUCTURE DESIGN DIVISION

Notes:
-All dimensions are in mm unless specified otherwise.
-All dimensions measure unfinished surfaces unless specified otherwise.
-All dimensions are to be read and not scaled off.
- Any discrepancies in drawings should immediately be brought to the notice of the design team

PROJECT TITLE:

TOILET FOR SCHOOLS
(GIRLS-7 UNITS)

REV	DATE	DESCRIPTION
1	Jan/2025	Changes in Architectural only.
2		
3		
4		
5		

DRAWING TITLE: LIGHT CIRCUITS LAYOUT

DESIGNED BY:	DRAWN BY:	CHECKED BY:	SCALE:
(NAMGAY RINCHEN) ELECTRICAL ENGINEER	(NAMGAY RINCHEN) ELECTRICAL ENGINEER	(TSHERING CHODEN) CHIEF ARCHITECT	NTS
REVIEWED & APPROVED BY: (TSHERING CHODEN) CHIEF ARCHITECT	DATE: DECEMBER/2023	DRAWING NO. TLT-HPL-7/ELE/04	

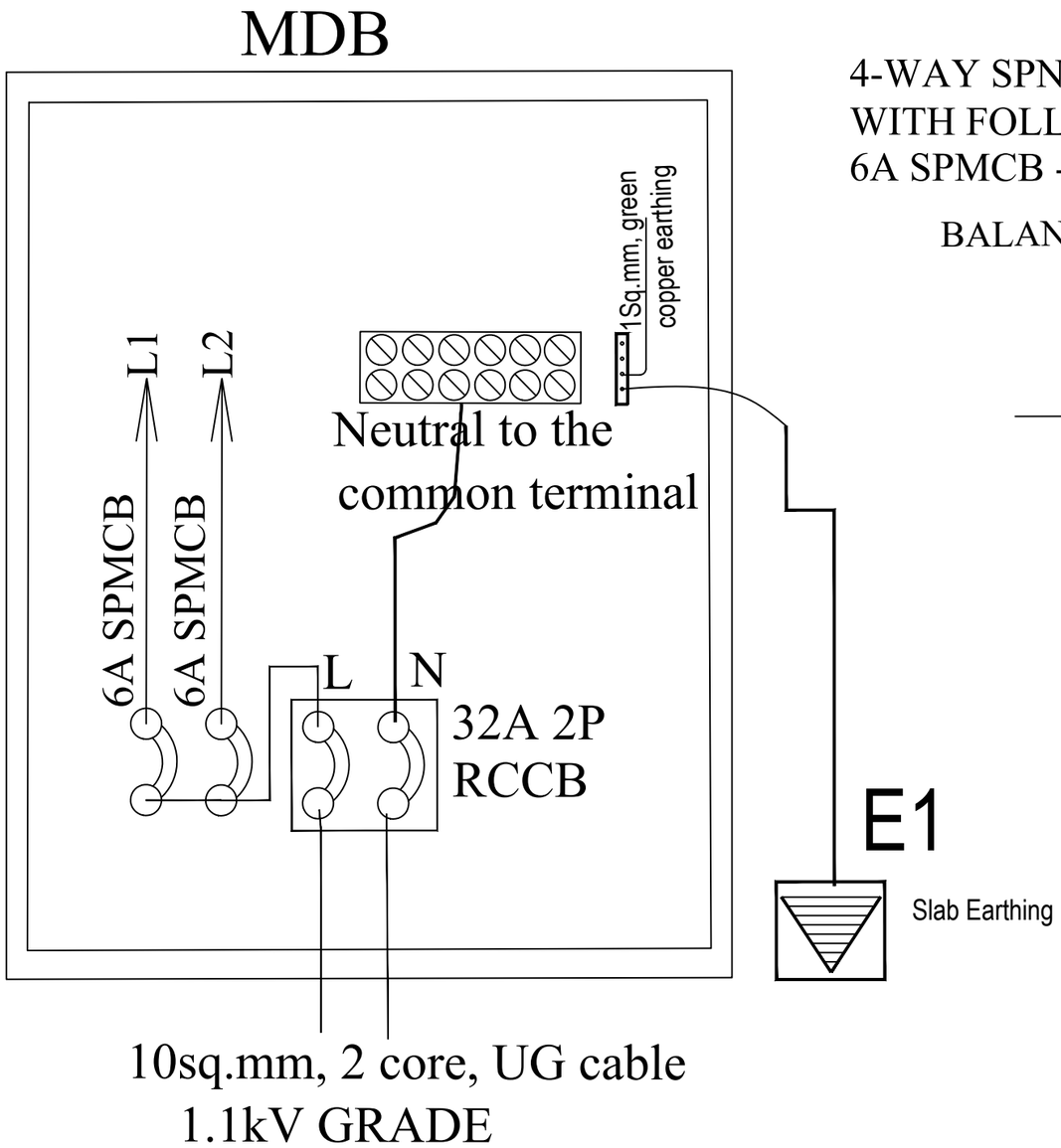

4-WAY SPN DB, INCOMING 32A RCCB,2P,
WITH FOLLOWING OUTGOING:
6A SPMCB - 2NOs.

BALANCE LOAD IN WATTS

L1- 295
L2- 91
386

L1= SB1,SB2
L2= SB3,SB4

ROYAL GOVERNMENT OF BHUTAN
MINISTRY OF INFRASTRUCTURE AND TRANSPORT

DEPARTMENT OF INFRASTRUCTURE DEVELOPMENT
INFRASTRUCTURE DESIGN DIVISION

Notes:
-All dimensions are in mm unless specified otherwise.
-All dimensions measure unfinished surfaces unless specified otherwise.
-All dimensions are to be read and not scaled off.
- Any discrepancies in drawings should immediately be brought to the notice of the design team

PROJECT TITLE:
TOILET FOR SCHOOLS (GIRLS-7 UNITS)

REV	DATE	DESCRIPTION
1	Jan/2025	Changes in Architectural only.
2		
3		
4		
5		

DRAWING TITLE: MDB DETAILS

DESIGNED BY:	DRAWN BY:	CHECKED BY:	SCALE:
(NAMGAY RINCHEN) ELECTRICAL ENGINEER	(NAMGAY RINCHEN) ELECTRICAL ENGINEER	(TSHERING CHODEN) CHIEF ARCHITECT	NTS
REVIEWED & APPROVED BY: (TSHERING CHODEN) CHIEF ARCHITECT	DATE: DECEMBER/2023	DRAWING NO. TLT-HPL-7/ELE/05	

ARCHITECTURAL DRAWINGS

KITCHEN

Owner - Khorlochhu Hydro Power Limited
Location - Doksum New Township, Trashiyangtse

Khorlochhu

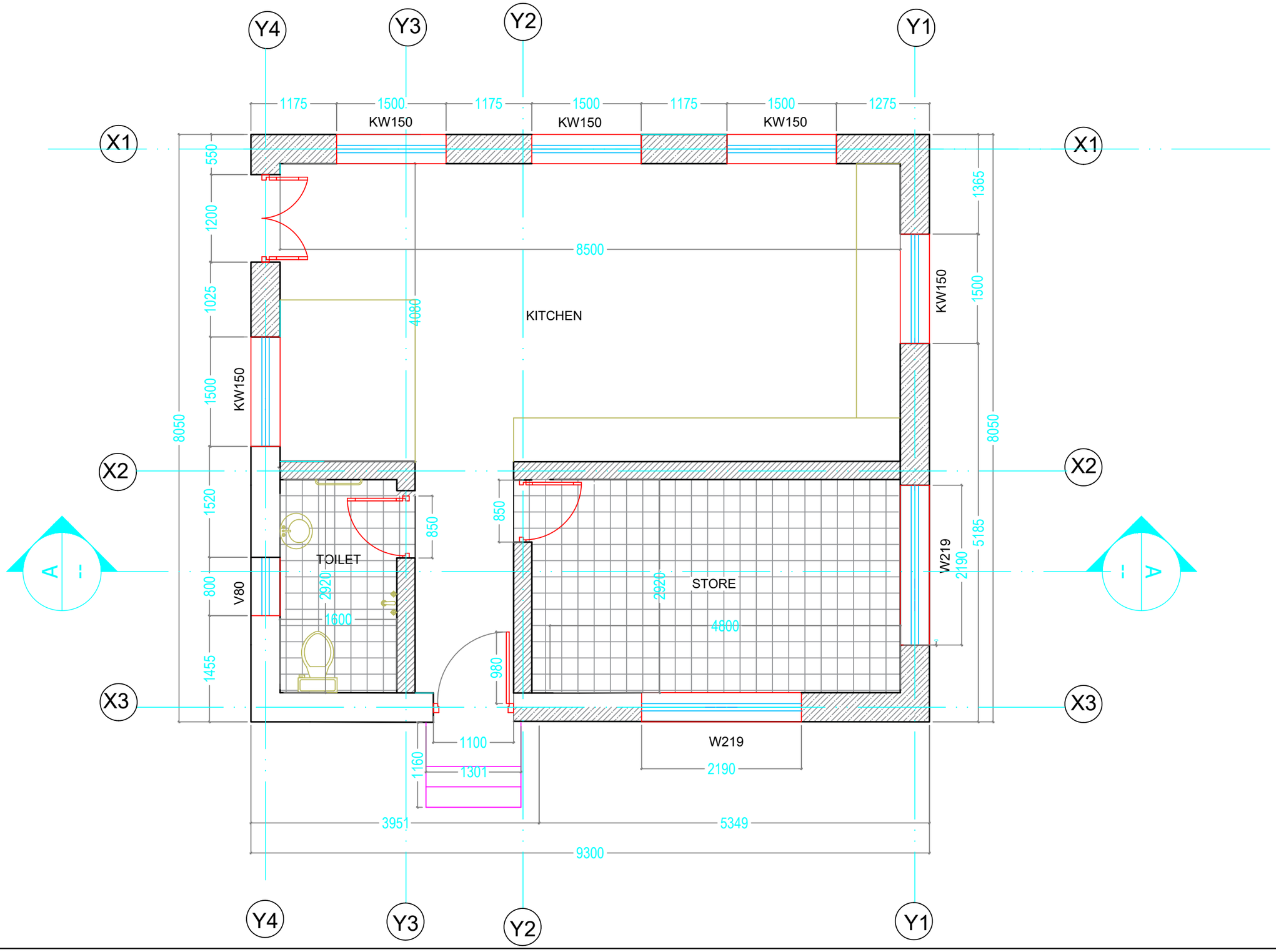

Khorlochhu

ARCHITECTURAL DRAWING

PROJECT TITLE	DRAWING TITLE
Construction of Doksum Primary School	FLOOR_PLAN

NOTES

1. ALL DIMENSIONS ARE IN MILLIMETER & ELEVATION IN METER UNLESS SPECIFIED OTHERWISE.
2. ALL DIMENSIONS MEASURE UNFINISHED SURFACES UNLESS SPECIFIED OTHERWISE.
3. DIMENSIONS ARE TO BE READ AND NOT SCALED OFF.
4. ANY DISCREPANCIES IN THE DRAWING ARE TO BE BROUGHT TO THE IMMEDIATE NOTICE OF THE SUPERVISION TEAM.

CHECKED	APPROVED	DATE	DRAWING NO.
			AR_01
		MARCH, 2026	SCALE
			NTS

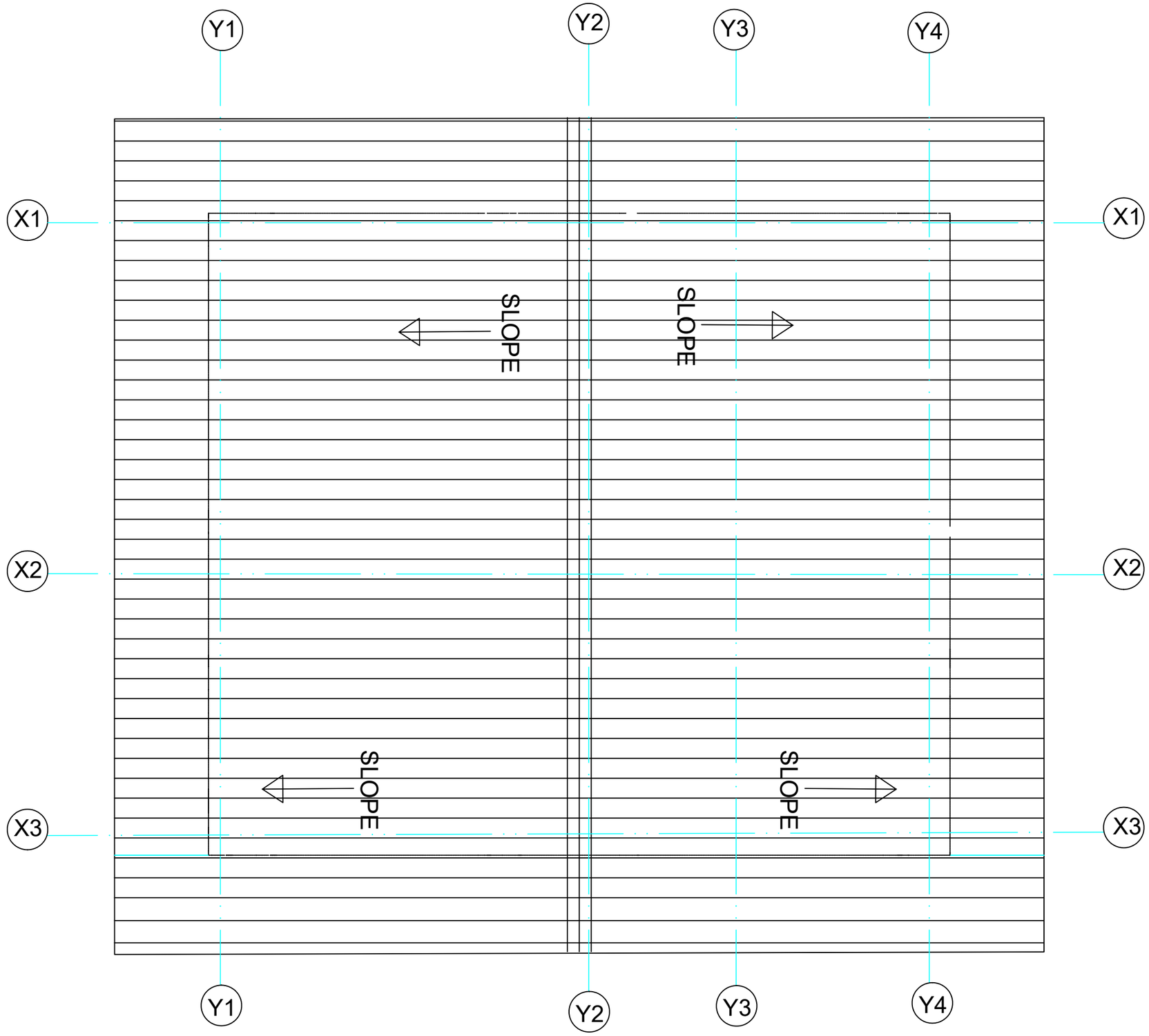

Khorlochhu

ARCHITECTURAL DRAWING

PROJECT TITLE	DRAWING TITLE
Construction of Doksum Primary School	ROOF_PLAN

NOTES

1. ALL DIMENSIONS ARE IN MILLIMETER & ELEVATION IN METER UNLESS SPECIFIED OTHERWISE.
2. ALL DIMENSIONS MEASURE UNFINISHED SURFACES UNLESS SPECIFIED OTHERWISE.
3. DIMENSIONS ARE TO BE READ AND NOT SCALED OFF.
4. ANY DISCREPANCIES IN THE DRAWING ARE TO BE BROUGHT TO THE IMMEDIATE NOTICE OF THE SUPERVISION TEAM.

CHECKED	APPROVED	DATE	DRAWING NO.
			AR_02
		MARCH, 2026	SCALE
			NTS

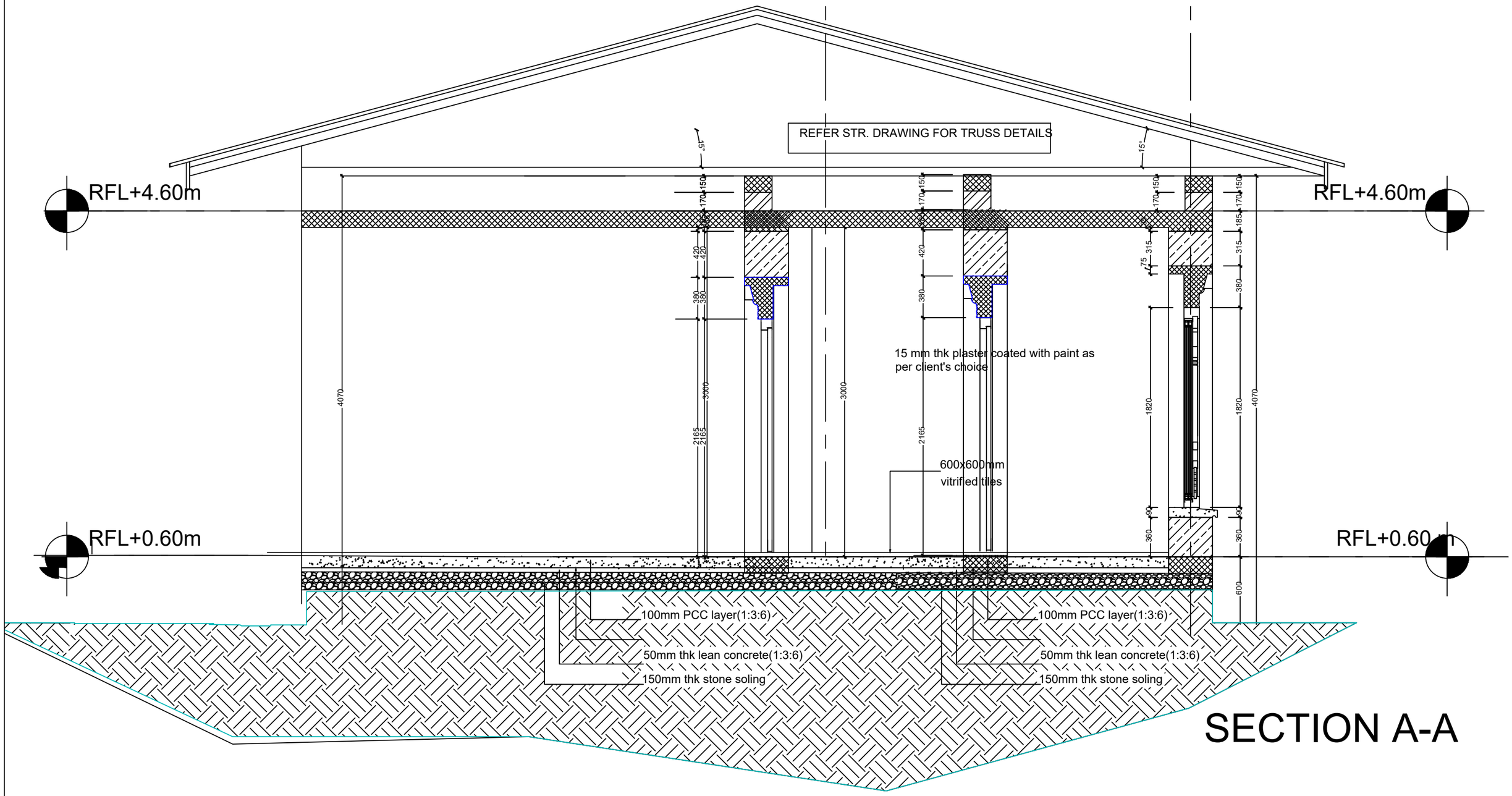

SECTION A-A

Khorlochhu

ARCHITECTURAL DRAWING		NOTES	CHECKED	APPROVED	DATE	DRAWING NO.
PROJECT TITLE	DRAWING TITLE	1. ALL DIMENSIONS ARE IN MILLIMETER & ELEVATION IN METER UNLESS SPECIFIED OTHERWISE. 2. ALL DIMENSIONS MEASURE UNFINISHED SURFACES UNLESS SPECIFIED OTHERWISE. 3. DIMENSIONS ARE TO BE READ AND NOT SCALED OFF. 4. ANY DISCREPANCIES IN THE DRAWING ARE TO BE BROUGHT TO THE IMMEDIATE NOTICE OF THE SUPERVISION TEAM.				AR_03
Construction of Doksum Primary School	SECTION_A-A				MARCH, 2026	SCALE NTS

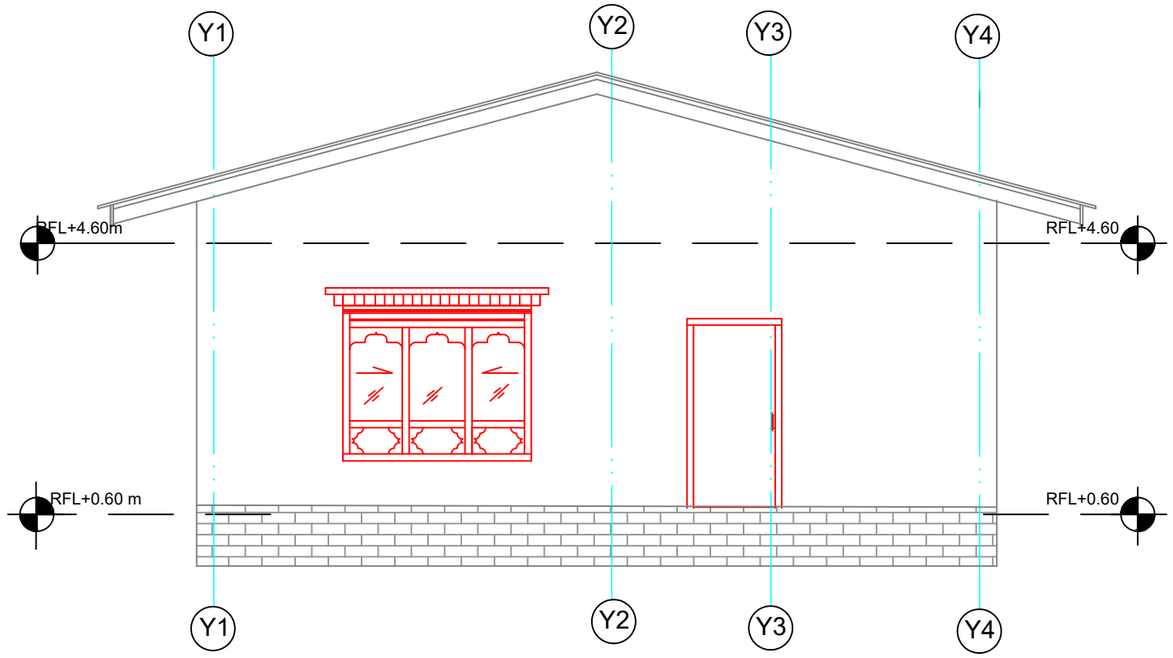

ELEVATION A

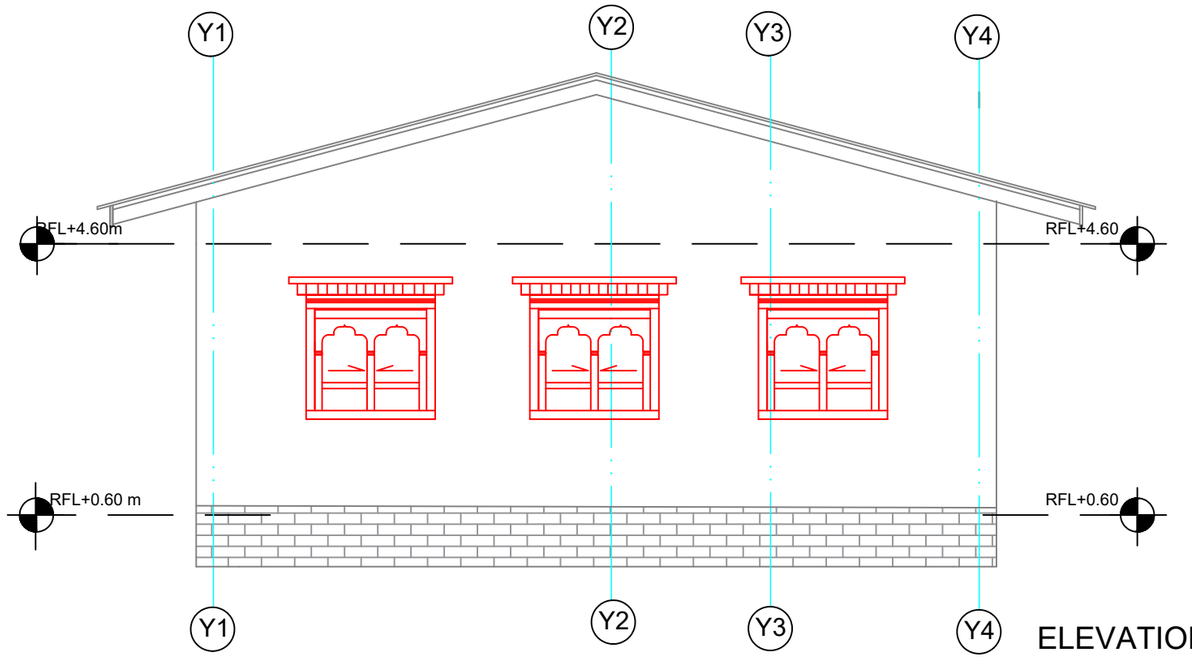

ELEVATION B

Khorlochhu

ARCHITECTURAL DRAWING

PROJECT TITLE	DRAWING TITLE
Construction of Doksum Primary School	ELEVATION_A_&_B

NOTES

1. ALL DIMENSIONS ARE IN MILLIMETER & ELEVATION IN METER UNLESS SPECIFIED OTHERWISE.
2. ALL DIMENSIONS MEASURE UNFINISHED SURFACES UNLESS SPECIFIED OTHERWISE.
3. DIMENSIONS ARE TO BE READ AND NOT SCALED OFF.
4. ANY DISCREPANCIES IN THE DRAWING ARE TO BE BROUGHT TO THE IMMEDIATE NOTICE OF THE SUPERVISION TEAM.

CHECKED	APPROVED	DATE	DRAWING NO.
			AR_04
		MARCH, 2026	SCALE
			NTS

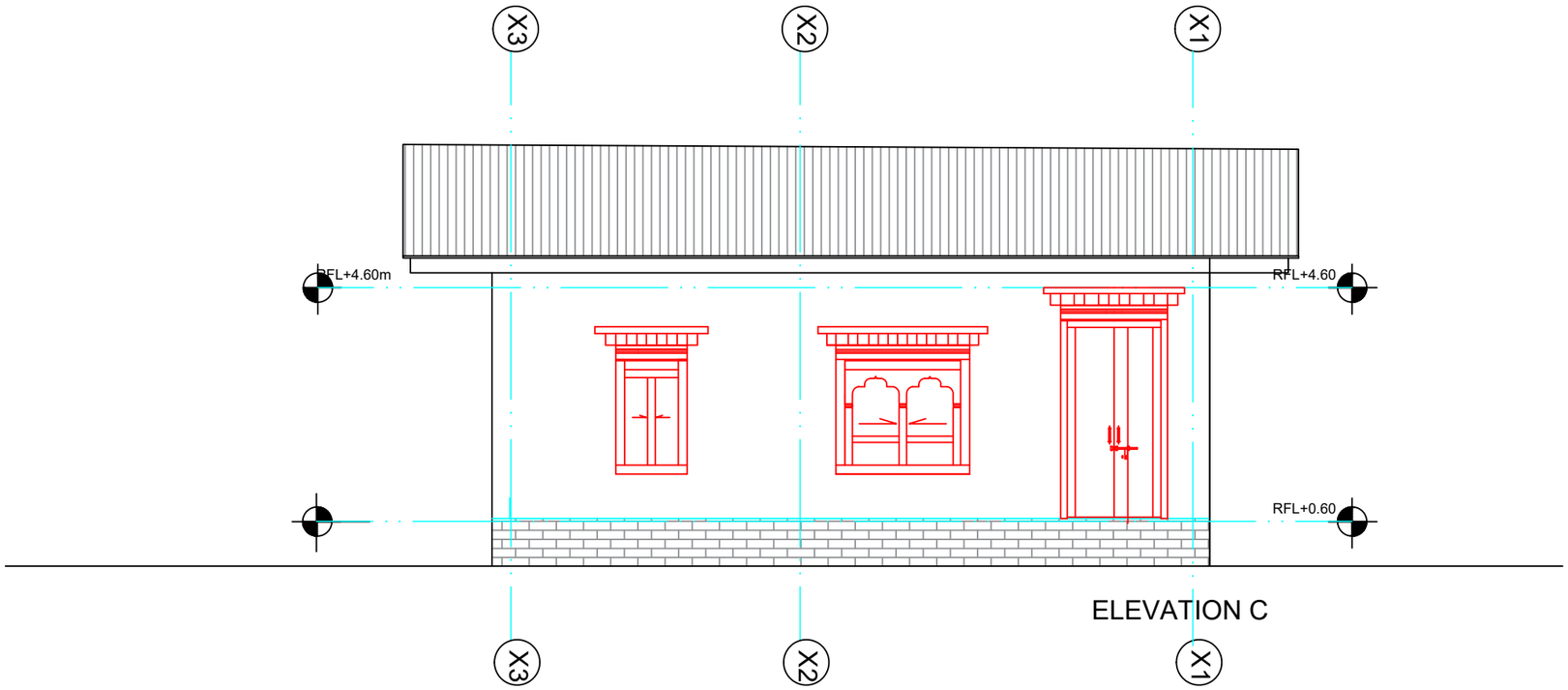

ELEVATION C

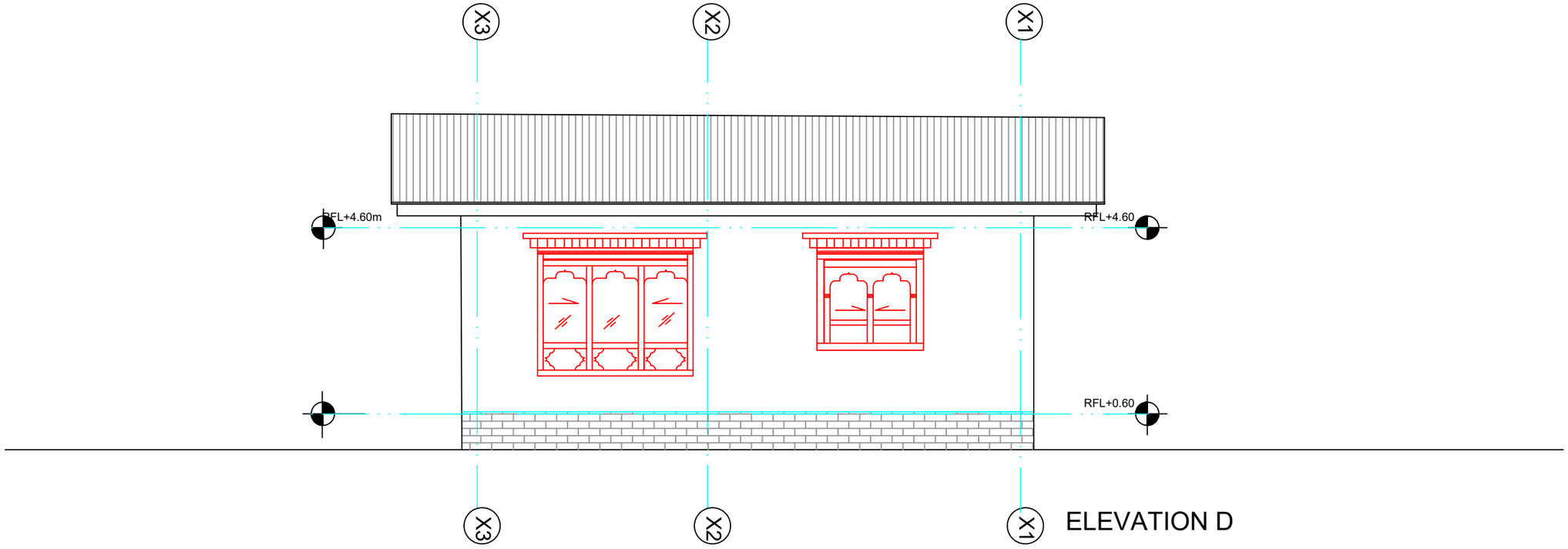

ELEVATION D

Khorlochhu

ARCHITECTURAL DRAWING

PROJECT TITLE	DRAWING TITLE
Construction of Doksum Primary School	ELEVATION_C_&_D

NOTES

1. ALL DIMENSIONS ARE IN MILLIMETER & ELEVATION IN METER UNLESS SPECIFIED OTHERWISE.
2. ALL DIMENSIONS MEASURE UNFINISHED SURFACES UNLESS SPECIFIED OTHERWISE.
3. DIMENSIONS ARE TO BE READ AND NOT SCALED OFF.
4. ANY DISCREPANCIES IN THE DRAWING ARE TO BE BROUGHT TO THE IMMEDIATE NOTICE OF THE SUPERVISION TEAM.

CHECKED	APPROVED	DATE	DRAWING NO.
			AR_05
		MARCH, 2026	SCALE
			NTS

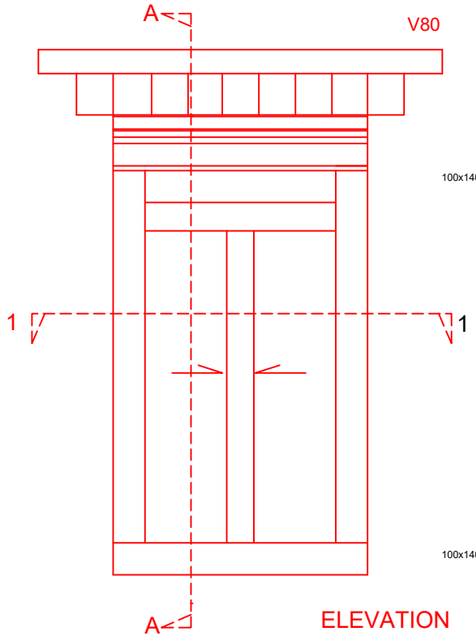

ELEVATION

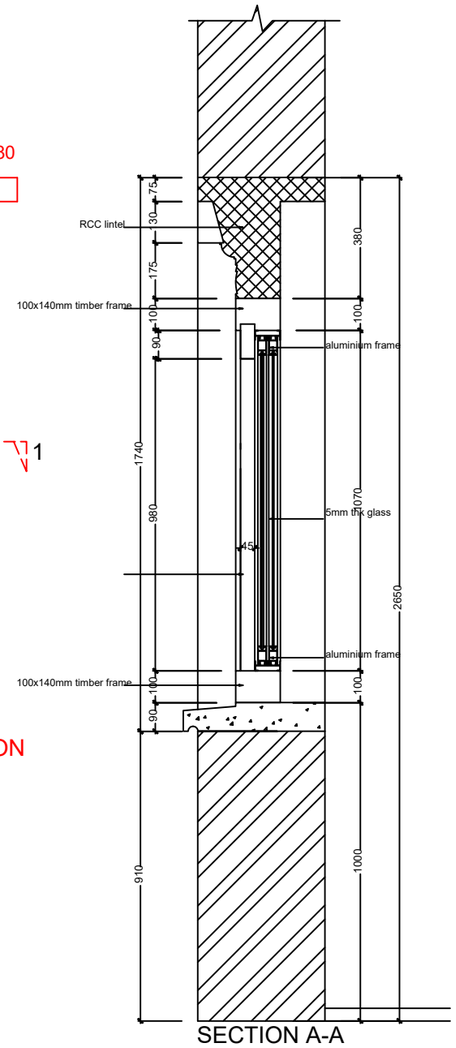

SECTION A-A

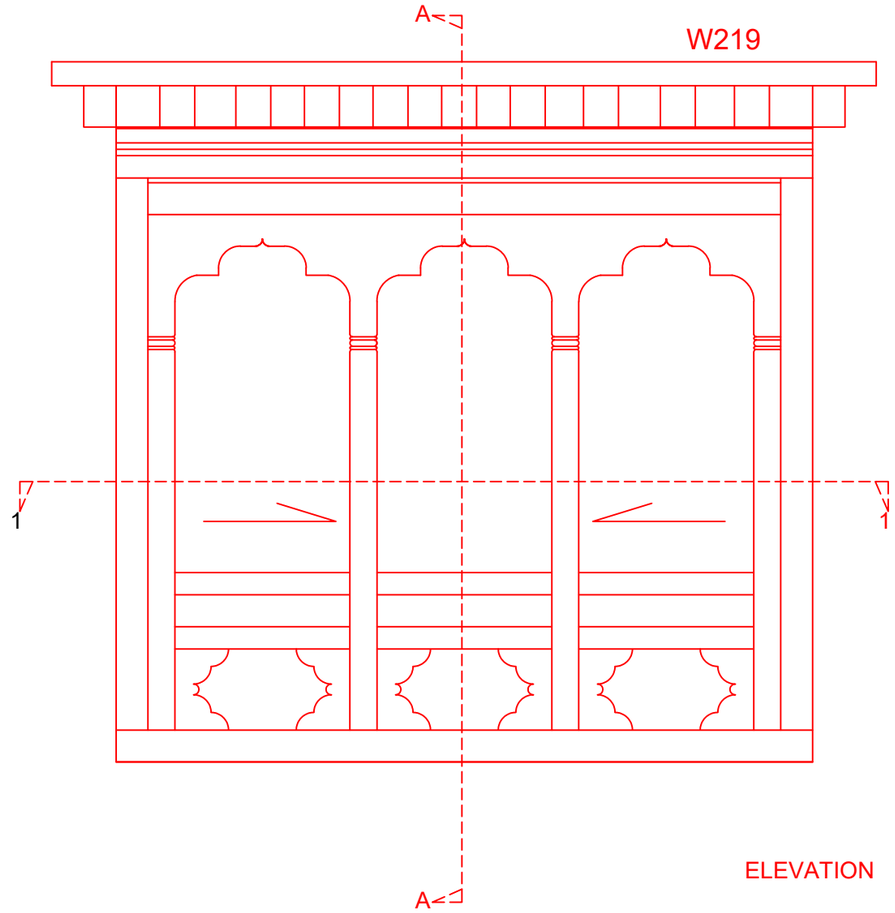

ELEVATION

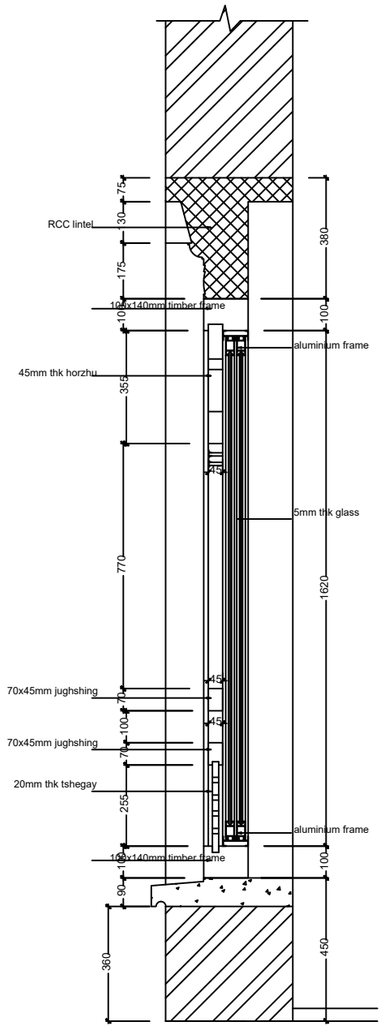

SECTION A-A

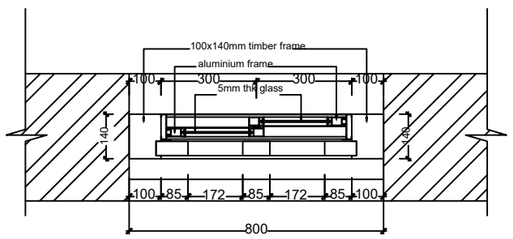

PLAN AT 1-1

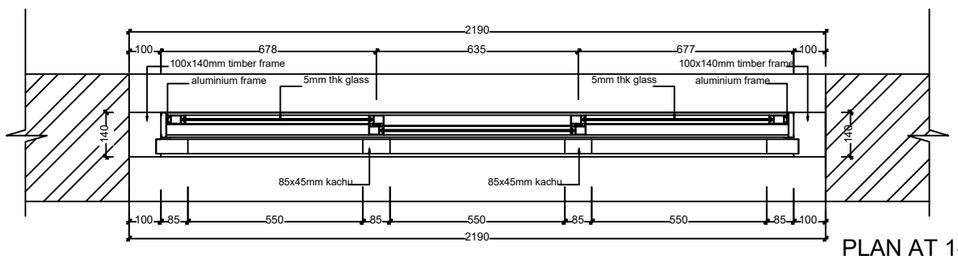

PLAN AT 1-1

Khorlochhu

ARCHITECTURAL DRAWING

PROJECT TITLE	DRAWING TITLE
Construction of Doksum Primary School	WINDOW_DETAILS

NOTES

1. ALL DIMENSIONS ARE IN MILLIMETER & ELEVATION IN METER UNLESS SPECIFIED OTHERWISE.
2. ALL DIMENSIONS MEASURE UNFINISHED SURFACES UNLESS SPECIFIED OTHERWISE.
3. DIMENSIONS ARE TO BE READ AND NOT SCALED OFF.
4. ANY DISCREPANCIES IN THE DRAWING ARE TO BE BROUGHT TO THE IMMEDIATE NOTICE OF THE SUPERVISION TEAM.

CHECKED	APPROVED	DATE	DRAWING NO.
			AR_06
		MARCH, 2026	SCALE
			NTS

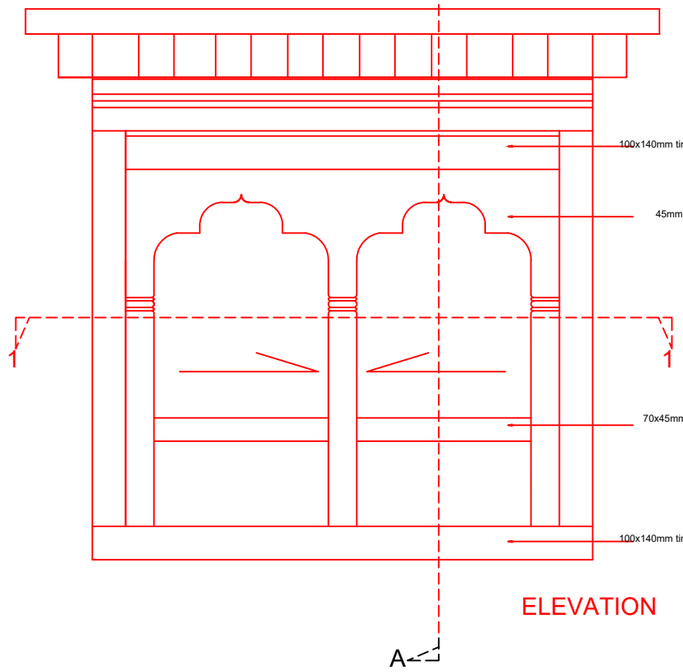

ELEVATION

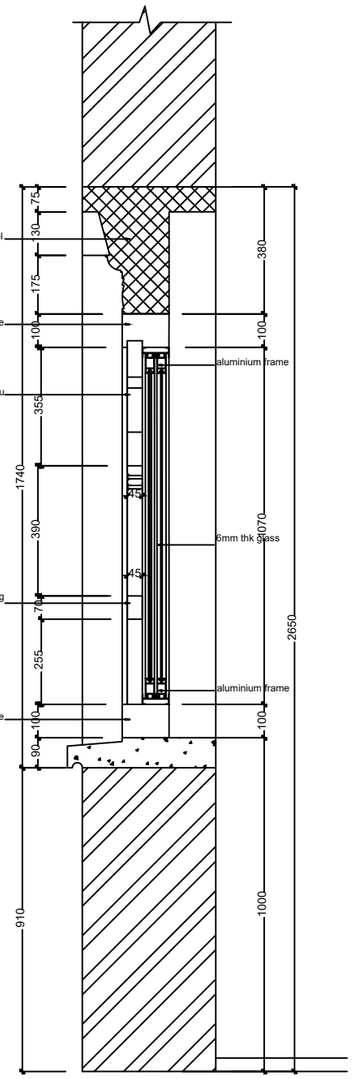

SECTION A-A

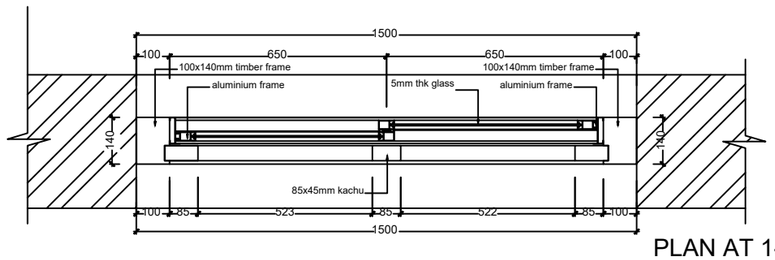

PLAN AT 1-1

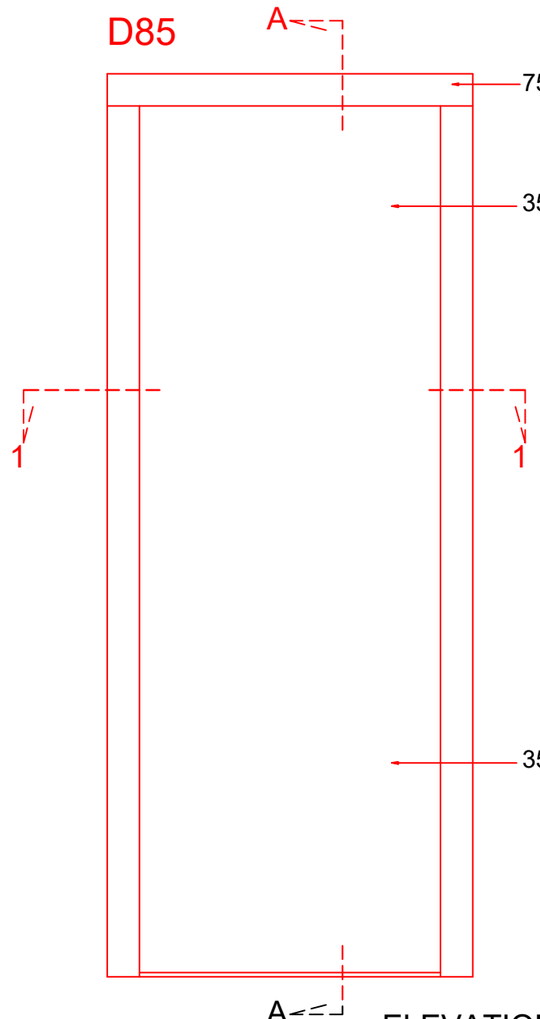

ELEVATION

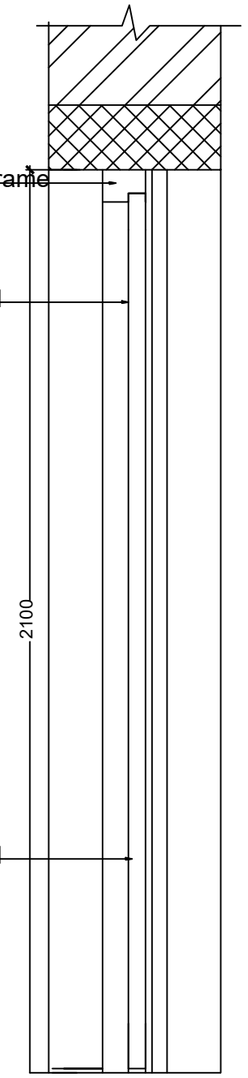

SECTION A-A

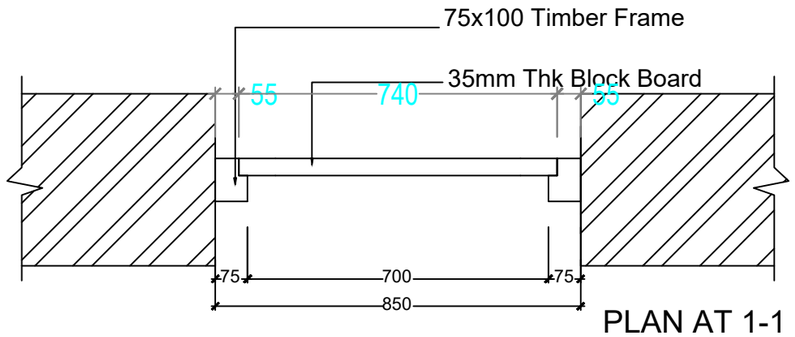

PLAN AT 1-1

Khorlochhu

ARCHITECTURAL DRAWING

PROJECT TITLE	DRAWING TITLE
Construction of Doksum Primary School	WINDOW_&_DOOR_DETAILS

NOTES

1. ALL DIMENSIONS ARE IN MILLIMETER & ELEVATION IN METER UNLESS SPECIFIED OTHERWISE.
2. ALL DIMENSIONS MEASURE UNFINISHED SURFACES UNLESS SPECIFIED OTHERWISE.
3. DIMENSIONS ARE TO BE READ AND NOT SCALED OFF.
4. ANY DISCREPANCIES IN THE DRAWING ARE TO BE BROUGHT TO THE IMMEDIATE NOTICE OF THE SUPERVISION TEAM.

CHECKED	APPROVED	DATE	DRAWING NO.
			AR_07
		MARCH, 2026	SCALE
			NTS

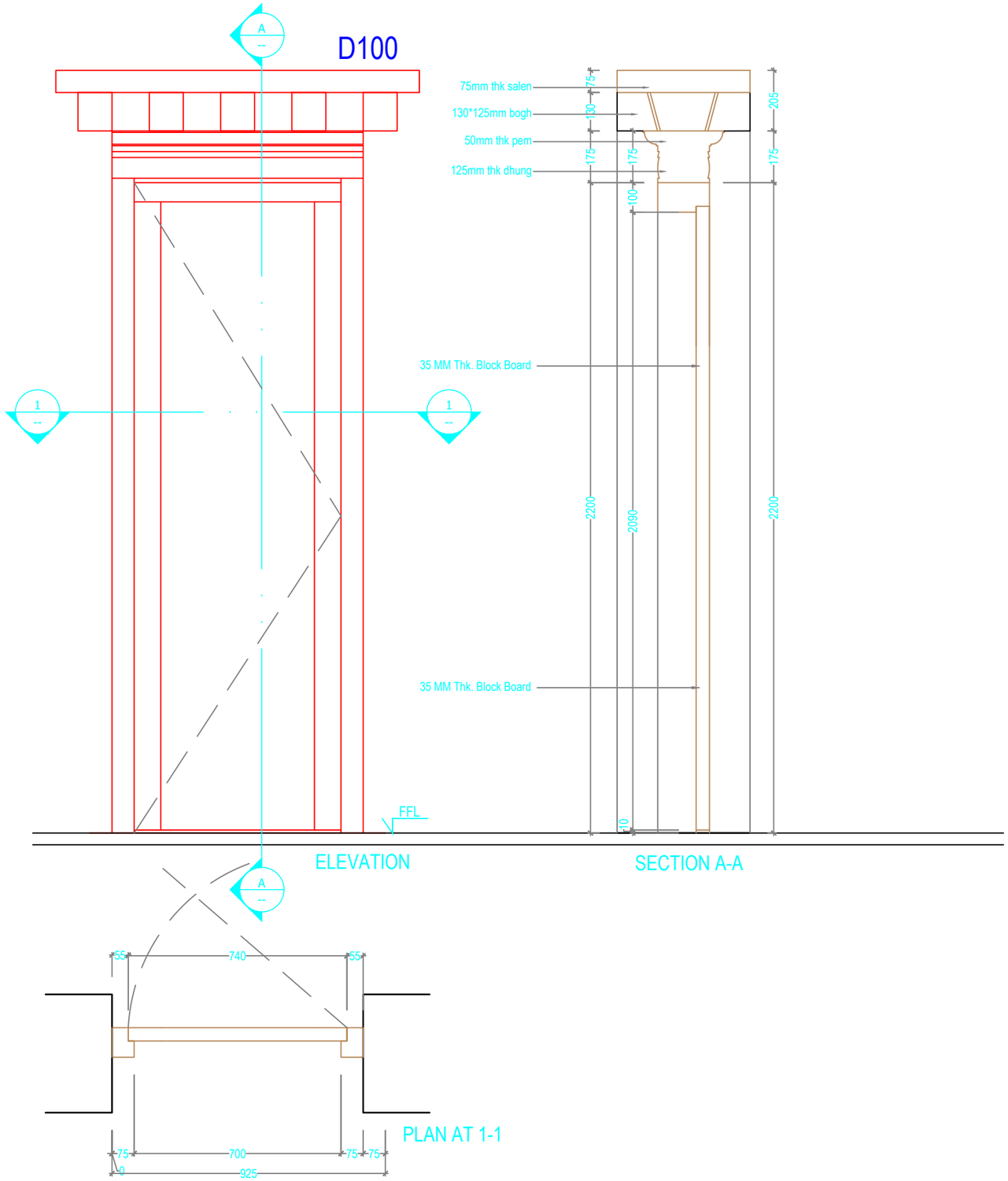

Khorlochhu	**ARCHITECTURAL DRAWING**	**NOTES**	**CHECKED**	**APPROVED**	**DATE**	**DRAWING NO.**
	PROJECT TITLE / **DRAWING TITLE**	1. ALL DIMENSIONS ARE IN MILLIMETER & ELEVATION IN METER UNLESS SPECIFIED OTHERWISE. 2. ALL DIMENSIONS MEASURE UNFINISHED SURFACES UNLESS SPECIFIED OTHERWISE. 3. DIMENSIONS ARE TO BE READ AND NOT SCALED OFF. 4. ANY DISCREPANCIES IN THE DRAWING ARE TO BE BROUGHT TO THE IMMEDIATE NOTICE OF THE SUPERVISION TEAM.				**AR_08**
	Construction of Doksum Primary School / **DOOR_DETAILS**				MARCH, 2026	**SCALE**
						NTS

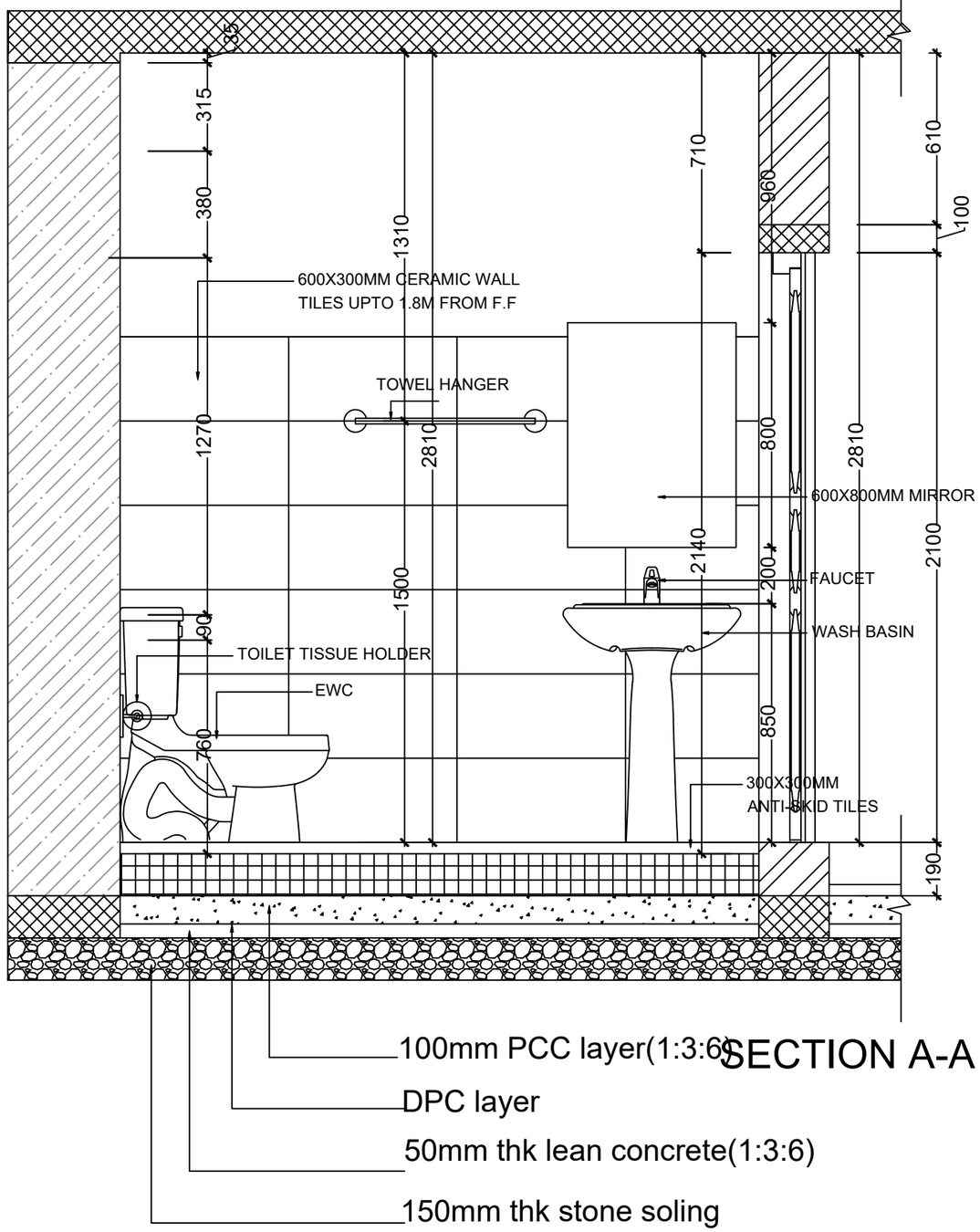

SECTION A-A

TOILET SECTIONAL DETAIL

Khorlochhu

ARCHITECTURAL DRAWING		NOTES	CHECKED	APPROVED	DATE	DRAWING NO.
PROJECT TITLE	DRAWING TITLE	1. ALL DIMENSIONS ARE IN MILLIMETER & ELEVATION IN METER UNLESS SPECIFIED OTHERWISE. 2. ALL DIMENSIONS MEASURE UNFINISHED SURFACES UNLESS SPECIFIED OTHERWISE. 3. DIMENSIONS ARE TO BE READ AND NOT SCALED OFF. 4. ANY DISCREPANCIES IN THE DRAWING ARE TO BE BROUGHT TO THE IMMEDIATE NOTICE OF THE SUPERVISION TEAM.				AR_09
Construction of Doksum Primary School	TOILET_DETAILS				MARCH, 2026	SCALE NTS

PLUMBING DRAWINGS

KITCHEN

Owner - Khorlochhu Hydro Power Limited
Location - Doksum New Township, Trashiyangtse

Khorlochhu

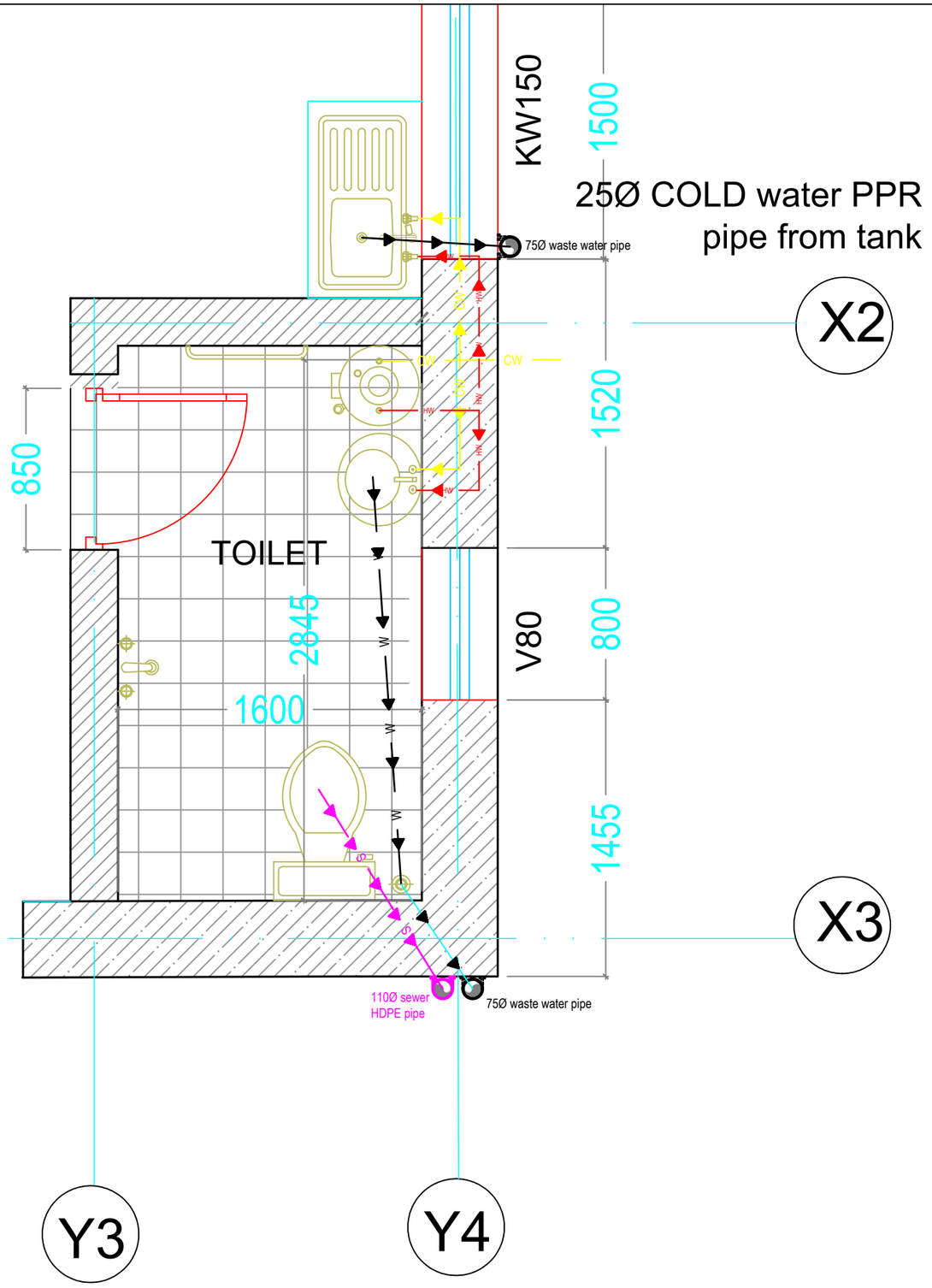

Khorlochhu

ARCHITECTURAL DRAWING

PROJECT TITLE	DRAWING TITLE
Construction of Doksum Primary School	WATER_DISTRIBUTION_LAYOUT

NOTES

1. ALL DIMENSIONS ARE IN MILLIMETER & ELEVATION IN METER UNLESS SPECIFIED OTHERWISE.
2. ALL DIMENSIONS MEASURE UNFINISHED SURFACES UNLESS SPECIFIED OTHERWISE.
3. DIMENSIONS ARE TO BE READ AND NOT SCALED OFF.
4. ANY DISCREPANCIES IN THE DRAWING ARE TO BE BROUGHT TO THE IMMEDIATE NOTICE OF THE SUPERVISION TEAM.

CHECKED	APPROVED	DATE	DRAWING NO.
			PB_01
		MARCH, 2026	SCALE
			NTS

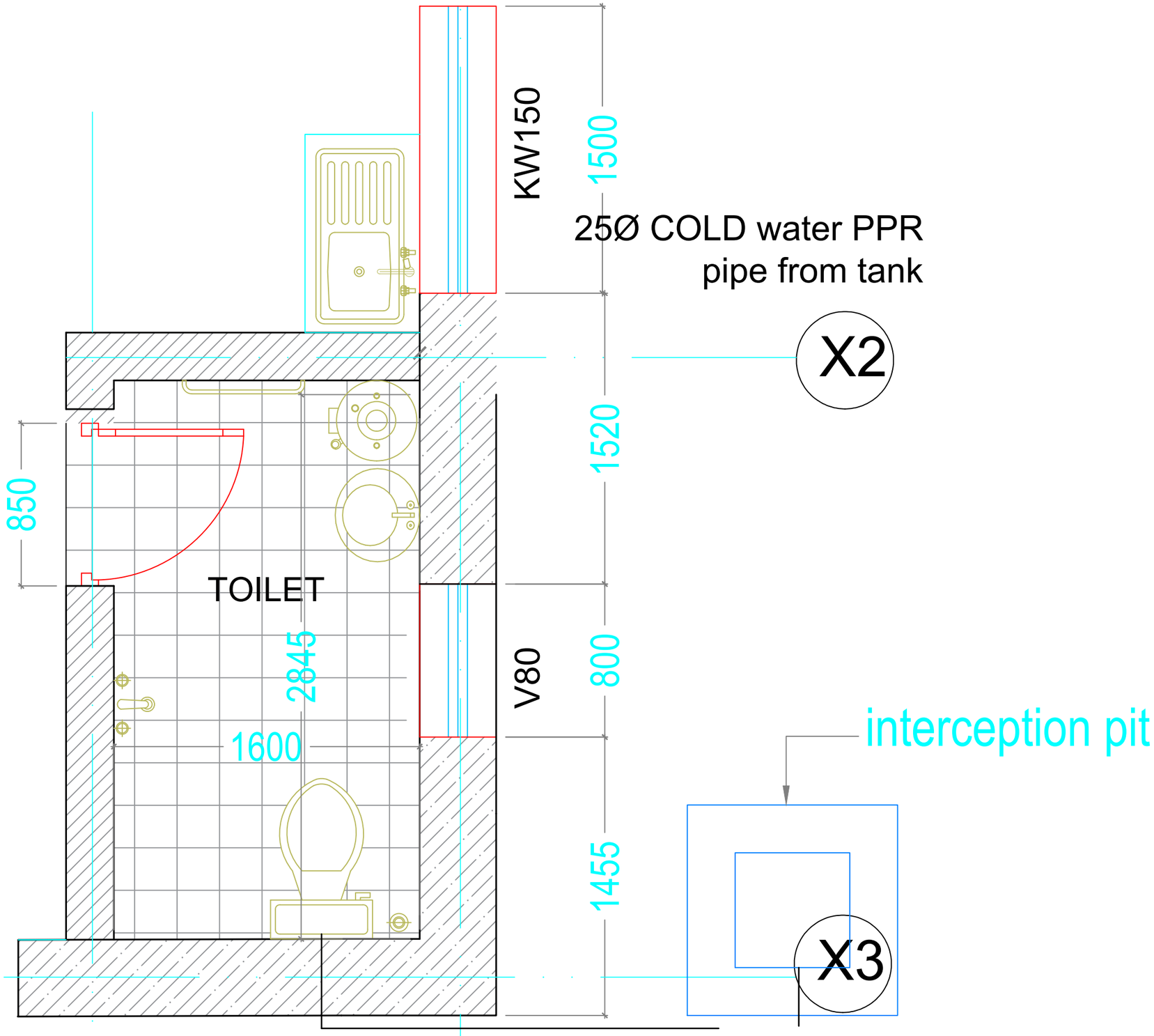

Khorlochhu

ARCHITECTURAL DRAWING

PROJECT TITLE	DRAWING TITLE
Construction of Doksum Primary School	WATER_SUPPLY_WASTE_WATER_&_SEWERAGE_LAYOUT

NOTES

1. ALL DIMENSIONS ARE IN MILLIMETER & ELEVATION IN METER UNLESS SPECIFIED OTHERWISE.
2. ALL DIMENSIONS MEASURE UNFINISHED SURFACES UNLESS SPECIFIED OTHERWISE.
3. DIMENSIONS ARE TO BE READ AND NOT SCALED OFF.
4. ANY DISCREPANCIES IN THE DRAWING ARE TO BE BROUGHT TO THE IMMEDIATE NOTICE OF THE SUPERVISION TEAM.

CHECKED	APPROVED	DATE	DRAWING NO.
			PB_02
		MARCH, 2026	SCALE
			NTS

STRUCTURAL DRAWINGS

KITCHEN

Owner - Khorlochhu Hydro Power Limited
Location - Doksum New Township, Trashiyangtse

Khorlochhu

GENERAL STRUCTURAL DESIGN NOTES

1. All dimension in mm unless otherwise mentioned
2. Structural drawing shall be read in conjunction with the Architectural drawing
3. Code of practice referred
   - IS 456-2000, code of practice for plain and RCC
   - IS 13920-1993, Ductile detailing for RCC
   - IS 4326-1993, Earthquake resistant design and construction of Building - Code of practice
4. Parameters assumed during the design
   - Bearing capacity of soil 150KN/Sq.m
   - Grade of concrete - M20
   - Grade of steel - Fe 415 TMT stell
   - Density of RCC - 25KN/Sq.m
   - Densisty Concrete brick - 16.79KN/Sq.m
   - Density of Stone Boulder - 23KN/Sq.m
   - Live Load on floor - 2KN/Sq.m
   - Live Load on roof- .75KN/Sq.m
5. Check all dimensions before commencing work
6. Additional information given on the drawing in the form of notes shall always be referred
7. Refer any discrepency to the engineer before proceeding with the work
8. No duct/conduit shall pass through Bands
9. One story load bearing structure with Brick in wall and Brick in partitions, Timber trusses, CGI roofing

Khorlochhu	STRUCTURAL DRAWING		NOTES	CHECKED	APPROVED	DATE	DRAWING NO.
	PROJECT TITLE	DRAWING TITLE	1. ALL DIMENSIONS ARE IN MILLIMETER & ELEVATION IN METER UNLESS SPECIFIED OTHERWISE. 2. ALL DIMENSIONS MEASURE UNFINISHED SURFACES UNLESS SPECIFIED OTHERWISE. 3. DIMENSIONS ARE TO BE READ AND NOT SCALED OFF. 4. ANY DISCREPANCIES IN THE DRAWING ARE TO BE BROUGHT TO THE IMMEDIATE NOTICE OF THE SUPERVISION TEAM.				STR_1
	Construction of Doksum Primary School	STRUCTURE_NOTES				MARCH, 2026	SCALE NTS

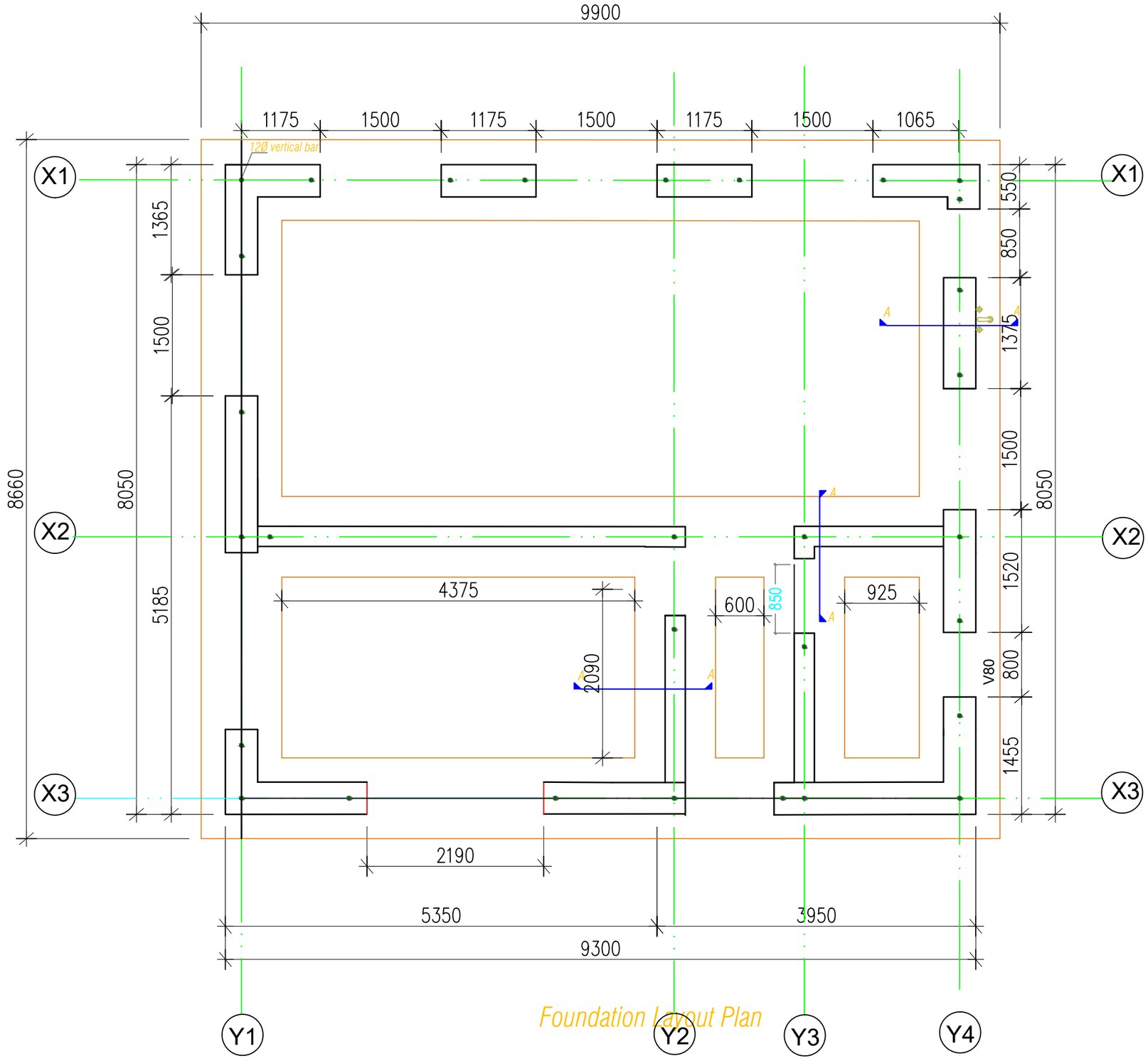

Foundation Layout Plan

Khorlochhu	STRUCTURAL DRAWING	NOTES	CHECKED	APPROVED	DATE	DRAWING NO.
	PROJECT TITLE: Construction of Doksum Primary School	1. ALL DIMENSIONS ARE IN MILLIMETER & ELEVATION IN METER UNLESS SPECIFIED OTHERWISE. 2. ALL DIMENSIONS MEASURE UNFINISHED SURFACES UNLESS SPECIFIED OTHERWISE. 3. DIMENSIONS ARE TO BE READ AND NOT SCALED OFF. 4. ANY DISCREPANCIES IN THE DRAWING ARE TO BE BROUGHT TO THE IMMEDIATE NOTICE OF THE SUPERVISION TEAM.				STR_02
	DRAWING TITLE: FOUNDATION_LAYOUT				MARCH, 2026	SCALE: NTS

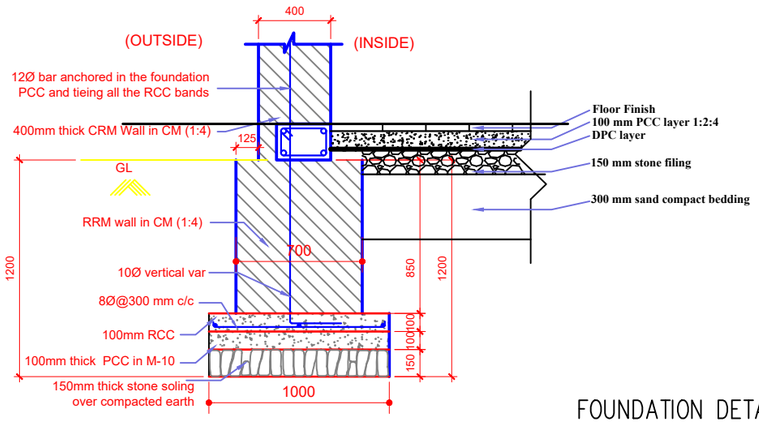

SECTION A-A

FOUNDATION DETAILS

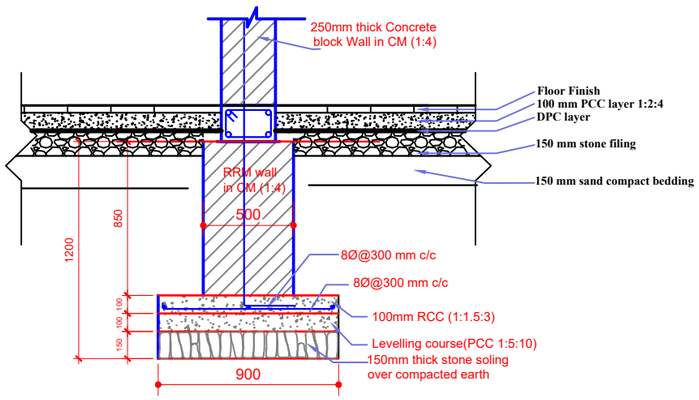

SECTION B-B

Notes:
1. For vertical bar placement see ST-03
2. Minimum soil bearing pressure at base of foundations to 120 KN/m2 Engineer to be consulted if abnormal soil conditions exist.
3. Soil at base of foundations to be well compacted

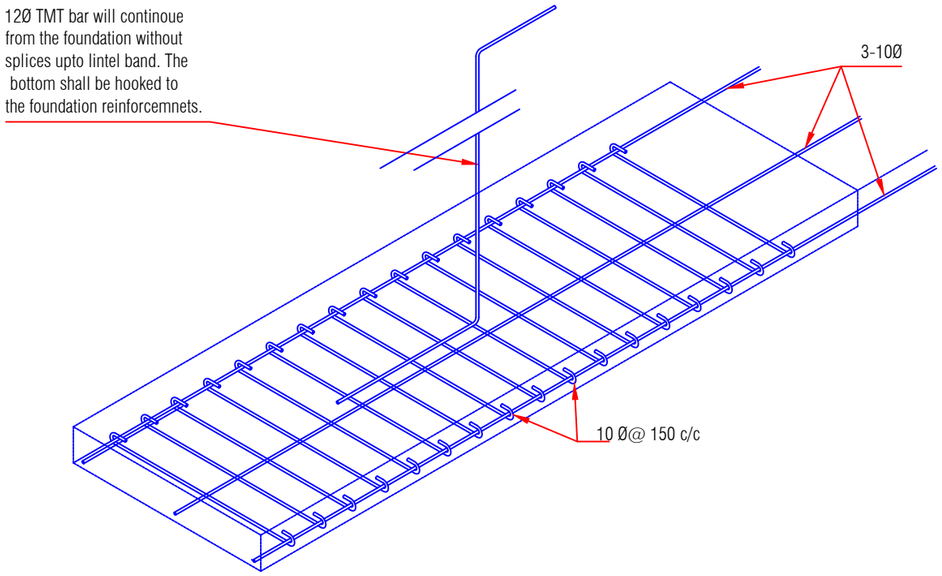

Reinforcement Details at foundation and Vertical Bar

Khorlochhu

STRUCTURAL DRAWING

PROJECT TITLE	DRAWING TITLE
Construction of Doksum Primary School	FOUNDATION_DETAILS

NOTES

1. ALL DIMENSIONS ARE IN MILLIMETER & ELEVATION IN METER UNLESS SPECIFIED OTHERWISE.
2. ALL DIMENSIONS MEASURE UNFINISHED SURFACES UNLESS SPECIFIED OTHERWISE.
3. DIMENSIONS ARE TO BE READ AND NOT SCALED OFF.
4. ANY DISCREPANCIES IN THE DRAWING ARE TO BE BROUGHT TO THE IMMEDIATE NOTICE OF THE SUPERVISION TEAM.

CHECKED	APPROVED	DATE	DRAWING NO.
			STR_03
		MARCH, 2026	SCALE
			NTS

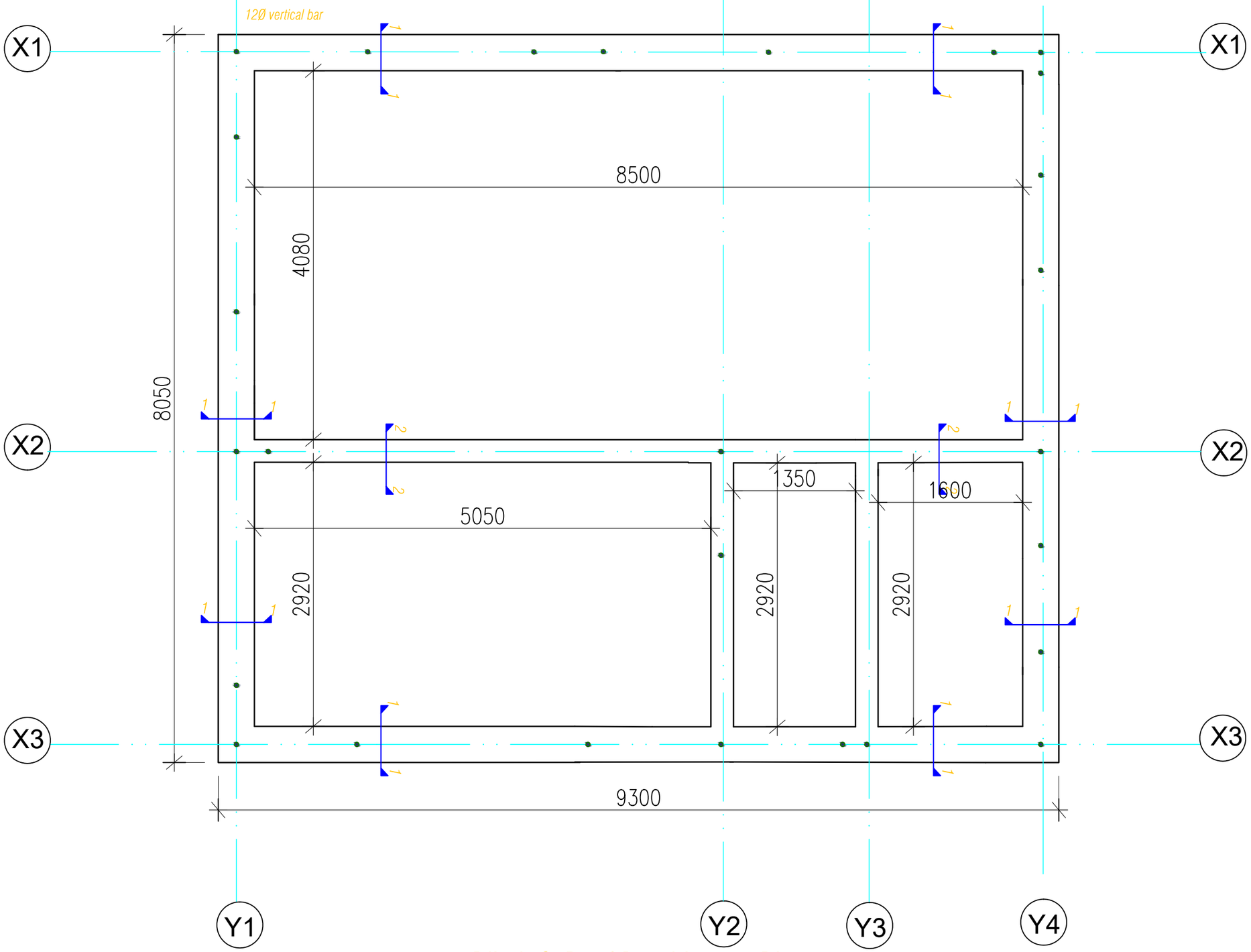

Plinth & Roof Band Layout Plan

Khorlochhu

STRUCTURAL DRAWING

PROJECT TITLE	DRAWING TITLE
Construction of Doksum Primary School	PLINTH_&_ROOF_BAND_LAYOUT_PLAN

NOTES

1. ALL DIMENSIONS ARE IN MILLIMETER & ELEVATION IN METER UNLESS SPECIFIED OTHERWISE.
2. ALL DIMENSIONS MEASURE UNFINISHED SURFACES UNLESS SPECIFIED OTHERWISE.
3. DIMENSIONS ARE TO BE READ AND NOT SCALED OFF.
4. ANY DISCREPANCIES IN THE DRAWING ARE TO BE BROUGHT TO THE IMMEDIATE NOTICE OF THE SUPERVISION TEAM.

CHECKED	APPROVED	DATE	DRAWING NO.
			STR_04
		MARCH, 2026	SCALE
			NTS

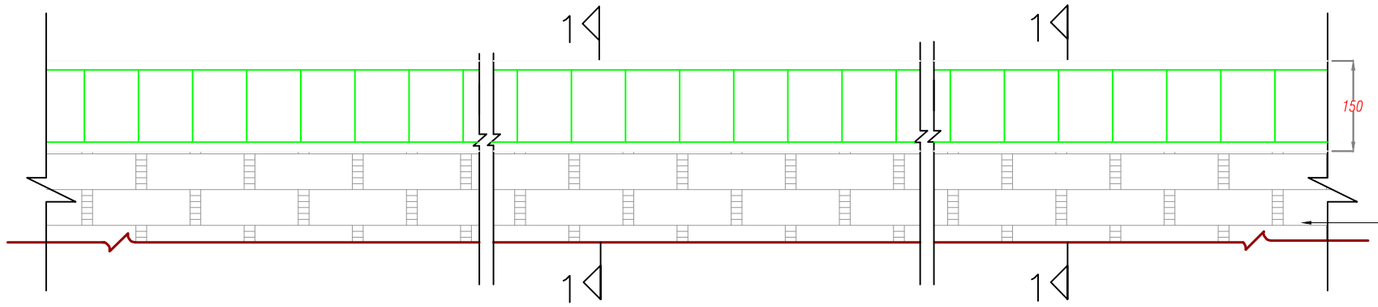

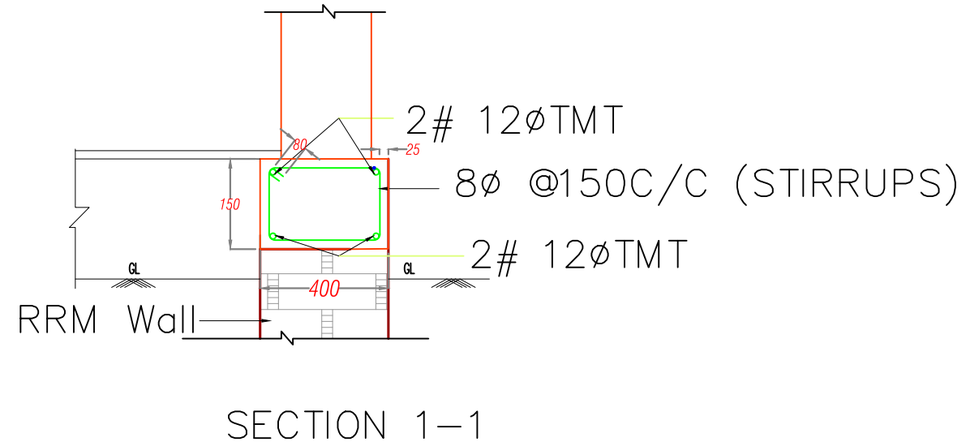

SECTION 1-1 OF PLINTH & ROOF BAND

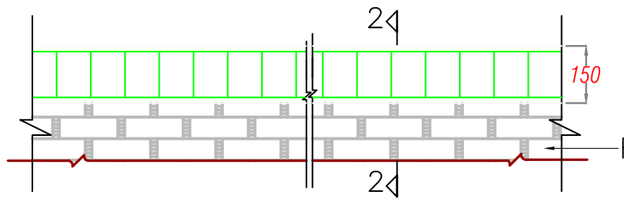

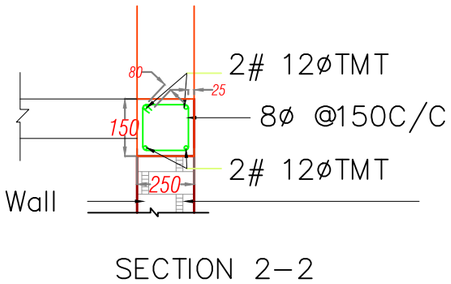

SECTION 2-2 OF PLINTH & ROOF BAND(250mm thick wall)

Khorlochhu

STRUCTURAL DRAWING

PROJECT TITLE	DRAWING TITLE
Construction of Doksum Primary School	AS_STATED_IN_DRAWING

NOTES

1. ALL DIMENSIONS ARE IN MILLIMETER & ELEVATION IN METER UNLESS SPECIFIED OTHERWISE.
2. ALL DIMENSIONS MEASURE UNFINISHED SURFACES UNLESS SPECIFIED OTHERWISE.
3. DIMENSIONS ARE TO BE READ AND NOT SCALED OFF.
4. ANY DISCREPANCIES IN THE DRAWING ARE TO BE BROUGHT TO THE IMMEDIATE NOTICE OF THE SUPERVISION TEAM.

CHECKED	APPROVED	DATE	DRAWING NO.
			STR_05
		MARCH, 2026	SCALE
			NTS

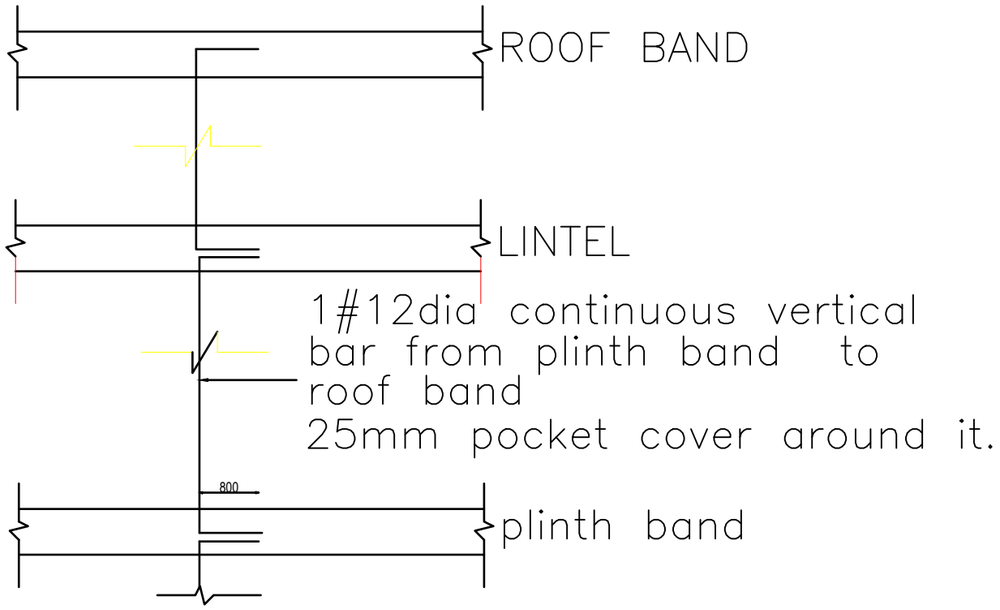

VERTICAL REBARS FIXING DETAILS

NOTES:

1. Vertical reinforcing bar starting from foundation at corners, junctions of walls and jambs of openings are shown in this drawing.
2. 12ø vertical reinforcing bars are to be used at corners and junctions.
3. 12ø vertical reinforcing bars are to be used at jambs of openings.
4. Lintel shall be provided above all windows and doors.
5. Maximum distance between vertical bars shall be 1500mm.
6. Lintel beam shall be extend at least 200mm beyond the edge of opening into the masonry wall.
7. Overlapping splice shall be of length 600mm in case of splice requirement and bars shall be properly tied using binding wire.
8. Lintel shall be provided over the windows and door
9. Cover to reinforcement shall be at least 25mm.
10. W= WIDTH OF THE MASONRY WALL.

	STRUCTURAL DRAWING		NOTES	CHECKED	APPROVED	DATE	DRAWING NO.
Khorlochhu	PROJECT TITLE	DRAWING TITLE	1. ALL DIMENSIONS ARE IN MILLIMETER & ELEVATION IN METER UNLESS SPECIFIED OTHERWISE. 2. ALL DIMENSIONS MEASURE UNFINISHED SURFACES UNLESS SPECIFIED OTHERWISE. 3. DIMENSIONS ARE TO BE READ AND NOT SCALED OFF. 4. ANY DISCREPANCIES IN THE DRAWING ARE TO BE BROUGHT TO THE IMMEDIATE NOTICE OF THE SUPERVISION TEAM.				STR_06
	Construction of Doksum Primary School	AS_STATED_IN_DRAWING				MARCH, 2026	SCALE NTS

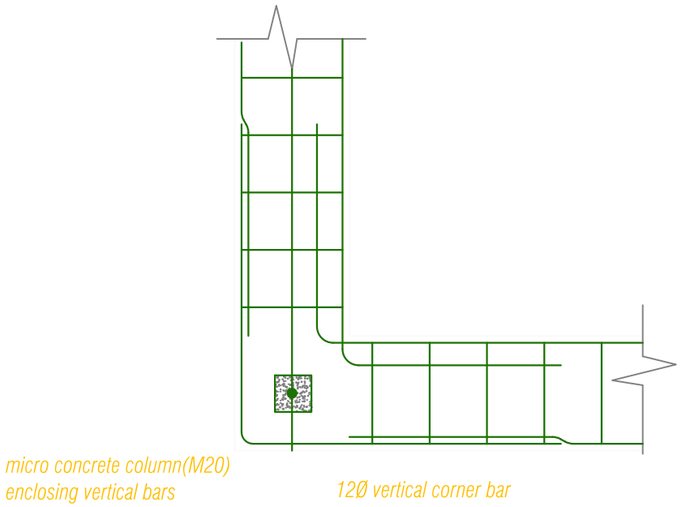

Reinforcement detailing at L-junction

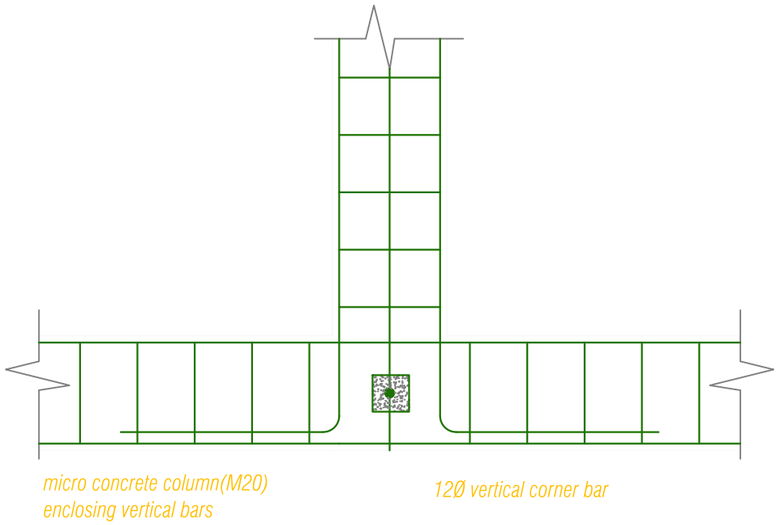

Reinforcement detailing at T-junction

note: concrete enclosing bars should be
well compacted to ensure bondage

Vertical reinforcement of 12Ø single bar at jambs
of windows and door opening shall be provided

VERTICAL REINFORCEMENT DETAIL

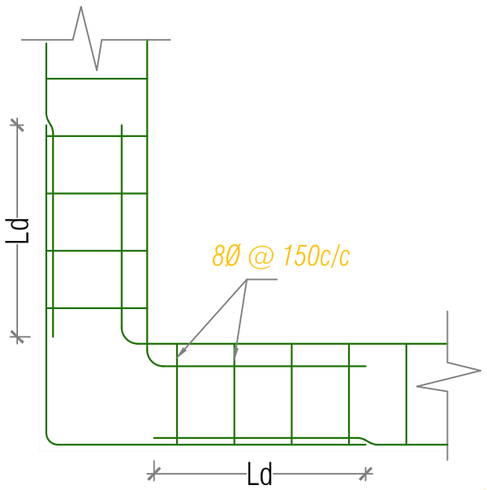

Reinforcement detailing at L-junction

note: concrete enclosing bars should be
well compacted to ensure bondage

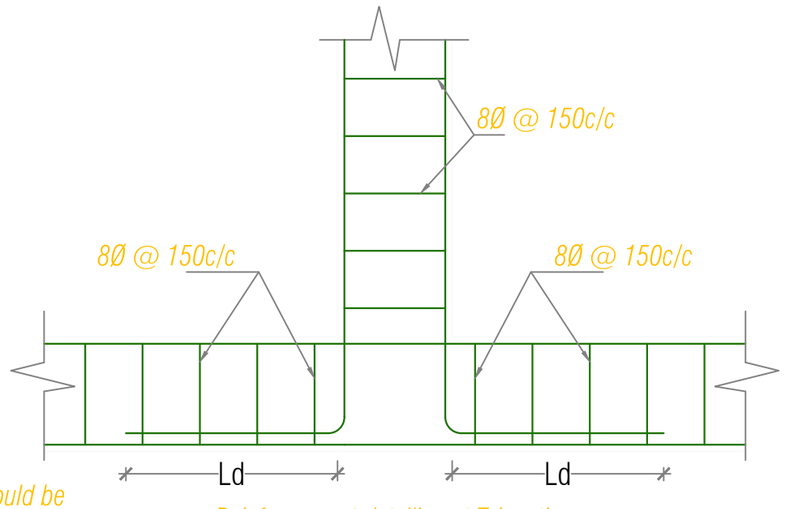

Reinforcement detailing at T-junction

HORIZONTAL REINFORCEMENT DETAIL

Khorlochhu

STRUCTURAL DRAWING

PROJECT TITLE	DRAWING TITLE
Construction of Doksum Primary School	AS_STATED_IN_DRAWING

NOTES

1. ALL DIMENSIONS ARE IN MILLIMETER & ELEVATION IN METER UNLESS SPECIFIED OTHERWISE.
2. ALL DIMENSIONS MEASURE UNFINISHED SURFACES UNLESS SPECIFIED OTHERWISE.
3. DIMENSIONS ARE TO BE READ AND NOT SCALED OFF.
4. ANY DISCREPANCIES IN THE DRAWING ARE TO BE BROUGHT TO THE IMMEDIATE NOTICE OF THE SUPERVISION TEAM.

CHECKED	APPROVED	DATE	DRAWING NO.
			STR_07
		MARCH, 2026	SCALE
			NTS

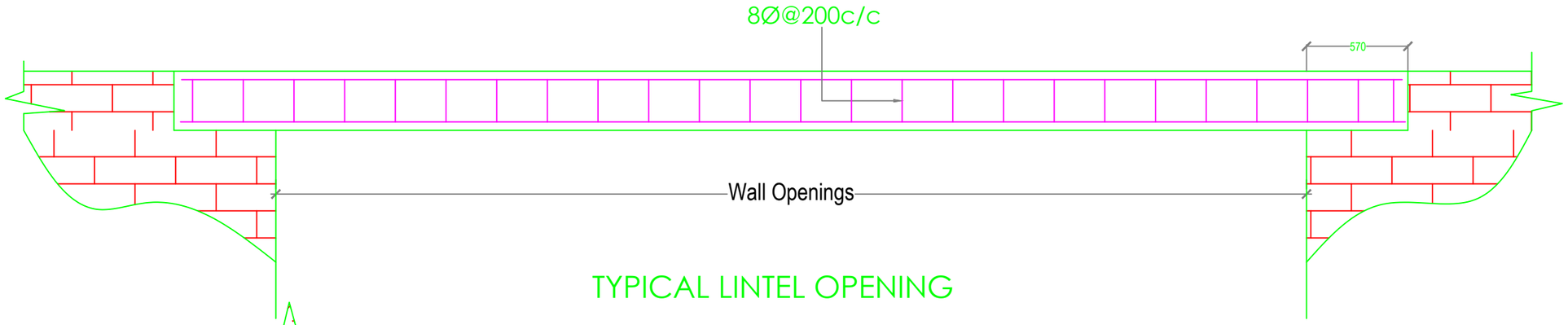

TYPICAL LINTEL OPENING

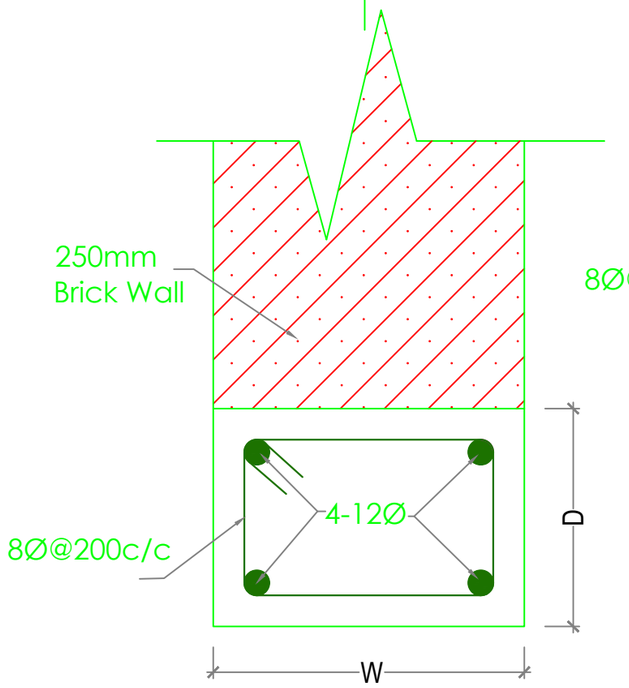

OPENING WITHIN
EXTERNAL WALL

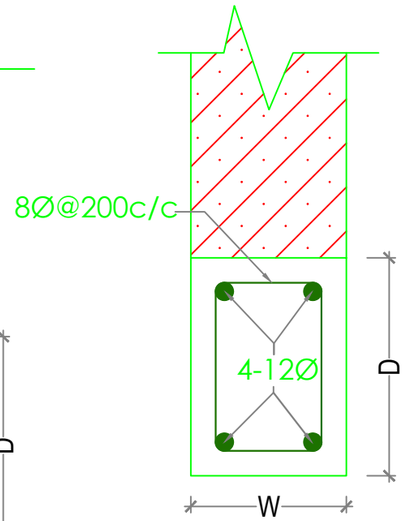

OPENING WITHIN
INTERNAL WALL

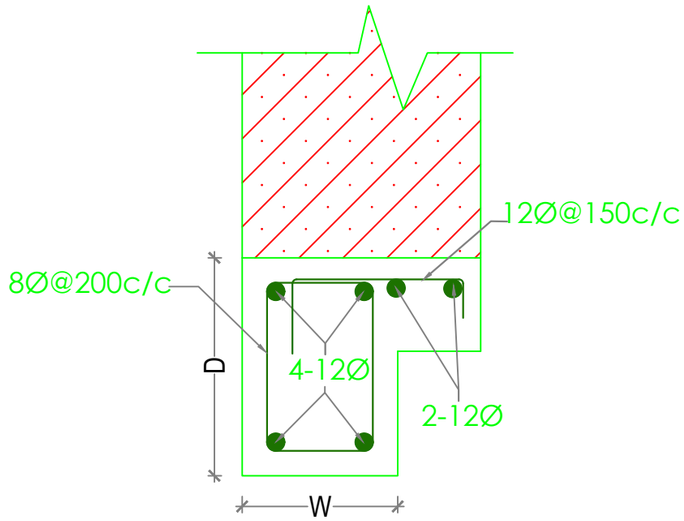

LINTEL WITH CORNICE

NOTE :

1. Depth (D) of Lintels is to be taken as shown in Architectural drawings, especially for main windows and should be taken as 150mm for all other Lintels.
2. Width (W) of Lintels is to be taken equal to the wall thickness.

Khorlochhu

STRUCTURAL DRAWING

PROJECT TITLE	DRAWING TITLE
Construction of Doksum Primary School	AS_STATED_IN_DRAWING

NOTES

1. ALL DIMENSIONS ARE IN MILLIMETER & ELEVATION IN METER UNLESS SPECIFIED OTHERWISE.
2. ALL DIMENSIONS MEASURE UNFINISHED SURFACES UNLESS SPECIFIED OTHERWISE.
3. DIMENSIONS ARE TO BE READ AND NOT SCALED OFF.
4. ANY DISCREPANCIES IN THE DRAWING ARE TO BE BROUGHT TO THE IMMEDIATE NOTICE OF THE SUPERVISION TEAM.

CHECKED	APPROVED	DATE	DRAWING NO.
			STR_08
		MARCH, 2026	SCALE
			NTS

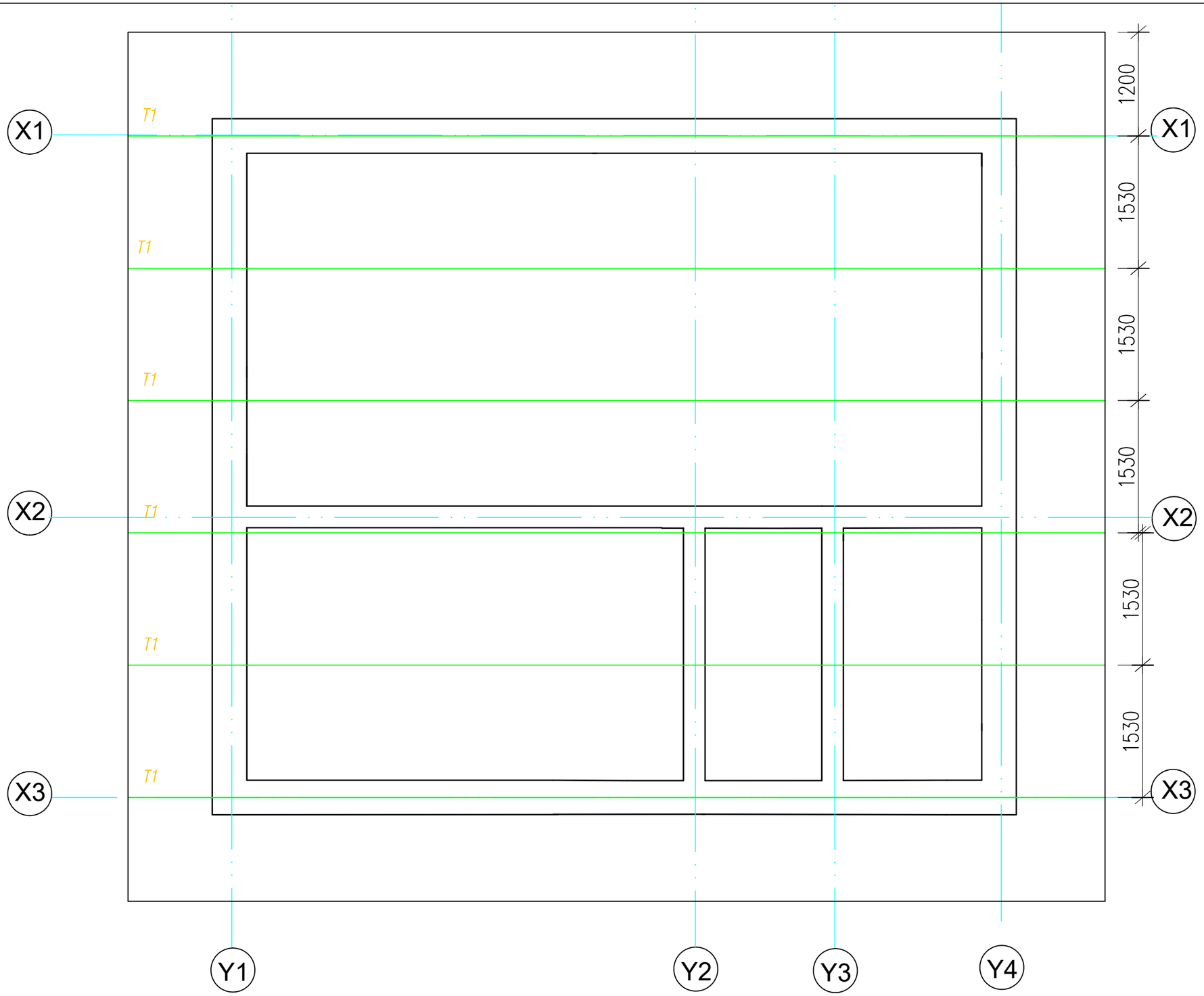

Khorlochhu

STRUCTURAL DRAWING

PROJECT TITLE	DRAWING TITLE
Construction of Doksum Primary School	TRUSS_DETAIL

NOTES

1. ALL DIMENSIONS ARE IN MILLIMETER & ELEVATION IN METER UNLESS SPECIFIED OTHERWISE.
2. ALL DIMENSIONS MEASURE UNFINISHED SURFACES UNLESS SPECIFIED OTHERWISE.
3. DIMENSIONS ARE TO BE READ AND NOT SCALED OFF.
4. ANY DISCREPANCIES IN THE DRAWING ARE TO BE BROUGHT TO THE IMMEDIATE NOTICE OF THE SUPERVISION TEAM.

CHECKED	APPROVED	DATE	DRAWING NO.
			STR_09
		MARCH, 2026	SCALE
			NTS

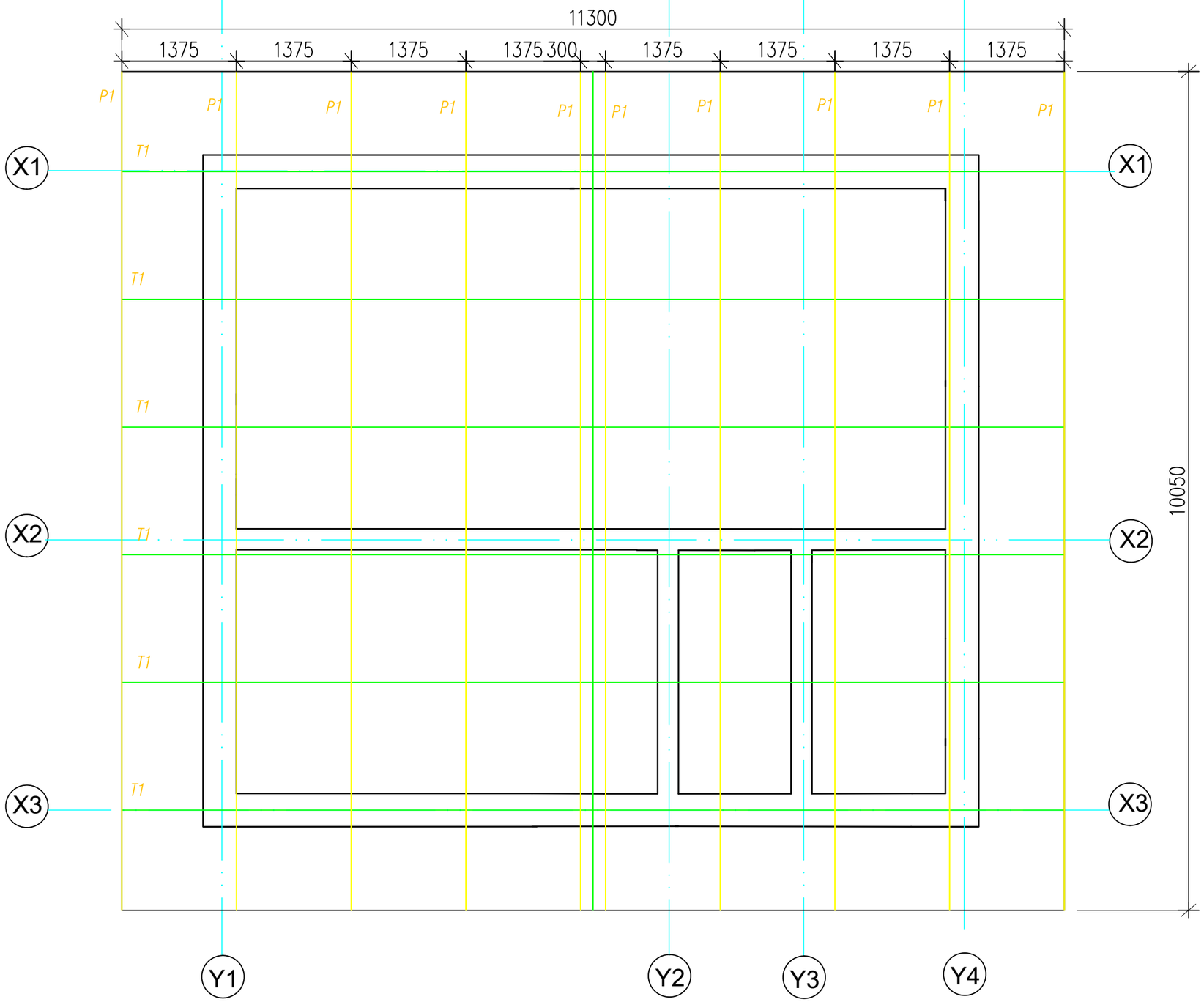

Roof Purlin Layout Plan

Khorlochhu	STRUCTURAL DRAWING	NOTES	CHECKED	APPROVED	DATE	DRAWING NO.
	PROJECT TITLE	1. ALL DIMENSIONS ARE IN MILLIMETER & ELEVATION IN METER UNLESS SPECIFIED OTHERWISE. 2. ALL DIMENSIONS MEASURE UNFINISHED SURFACES UNLESS SPECIFIED OTHERWISE. 3. DIMENSIONS ARE TO BE READ AND NOT SCALED OFF. 4. ANY DISCREPANCIES IN THE DRAWING ARE TO BE BROUGHT TO THE IMMEDIATE NOTICE OF THE SUPERVISION TEAM.				STR_10
	Construction of Doksum Primary School				MARCH, 2026	SCALE
						NTS

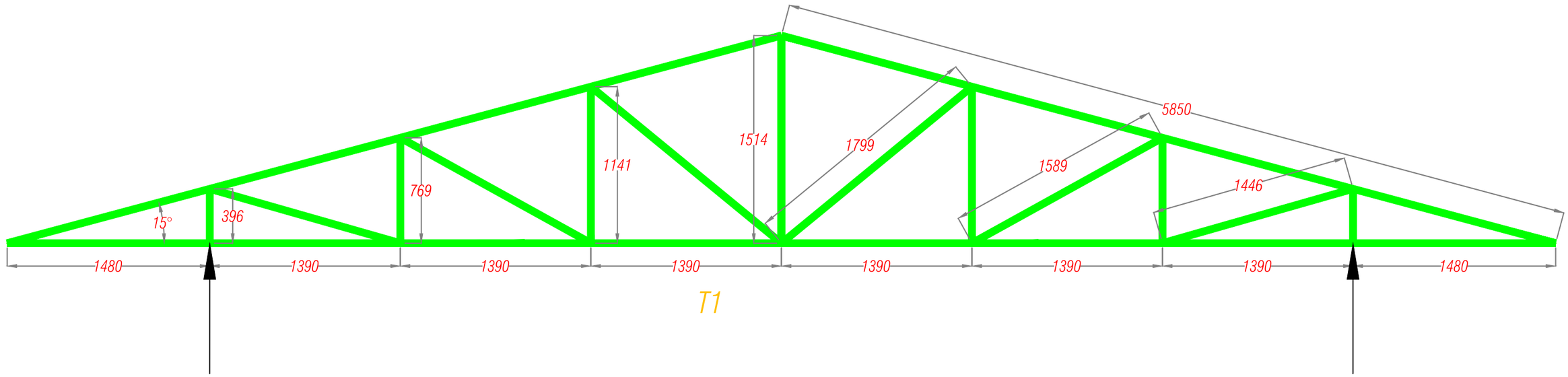

Truss Details

Note: Purlins to be placed at 1100mm c/c

Truss member size:

Sl No.	Particulars	Size
1	Rafter	50 NB light
2	Bottom Chord	50 NB light
3	Vertical and Diagonal struts	40 NB light
4	Purlin	40 NB light

Khorlochhu

STRUCTURAL DRAWING

PROJECT TITLE	DRAWING TITLE
Construction of Doksum Primary School	AS_STATED_IN_DRAWING

NOTES

1. ALL DIMENSIONS ARE IN MILLIMETER & ELEVATION IN METER UNLESS SPECIFIED OTHERWISE.
2. ALL DIMENSIONS MEASURE UNFINISHED SURFACES UNLESS SPECIFIED OTHERWISE.
3. DIMENSIONS ARE TO BE READ AND NOT SCALED OFF.
4. ANY DISCREPANCIES IN THE DRAWING ARE TO BE BROUGHT TO THE IMMEDIATE NOTICE OF THE SUPERVISION TEAM.

CHECKED	APPROVED	DATE	DRAWING NO.
			STR_11
		MARCH, 2026	SCALE
			NTS

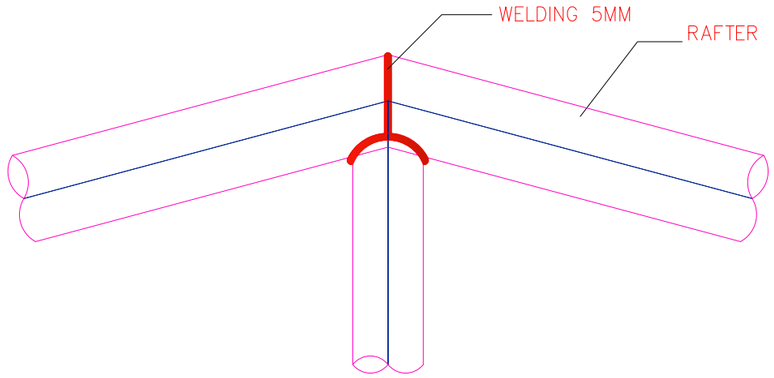

DETAIL AT A

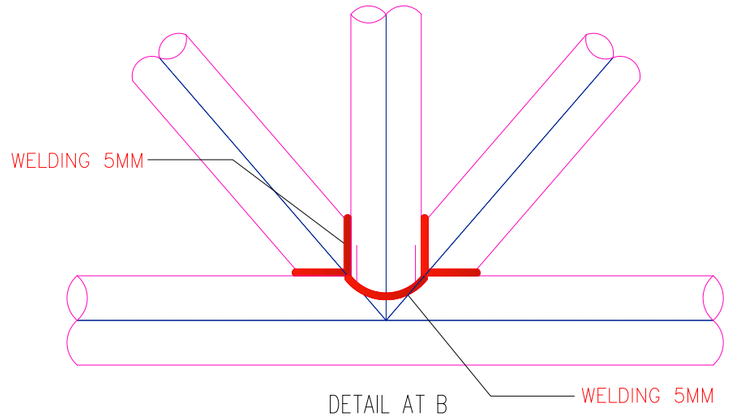

DETAIL AT B

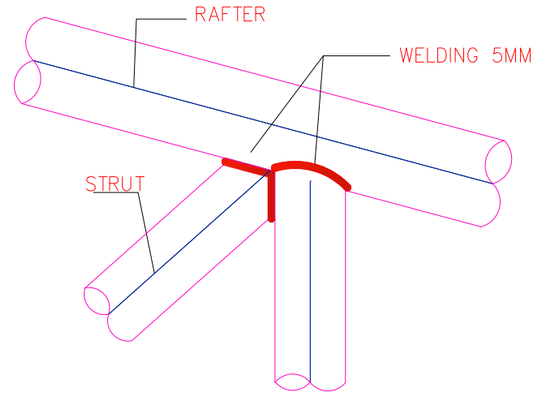

DETAIL AT C

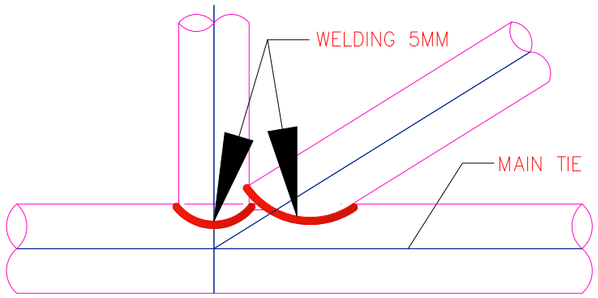

DETAIL AT D

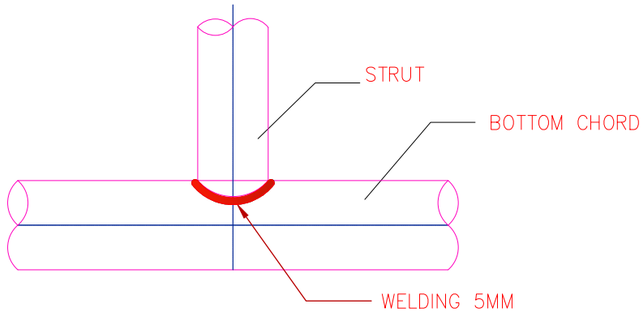

DETAIL AT E

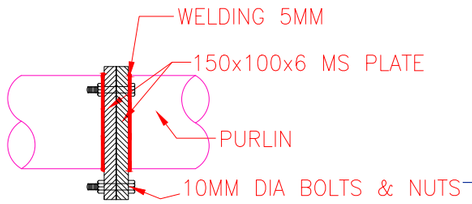

TYPICAL PURLIN & RAFTER JOINERY DETAIL

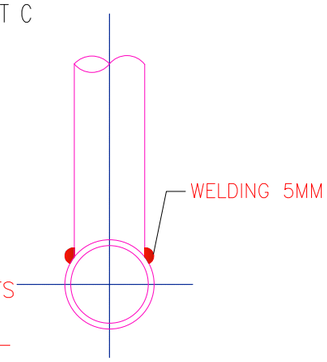

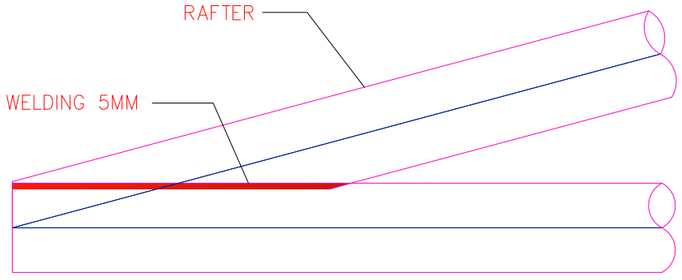

DETAIL AT F

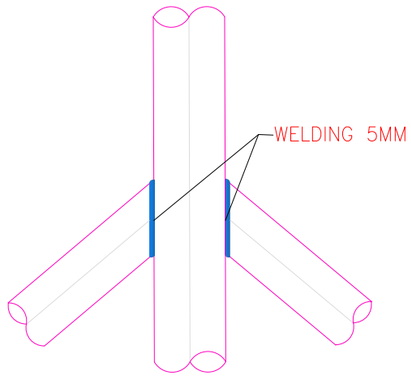

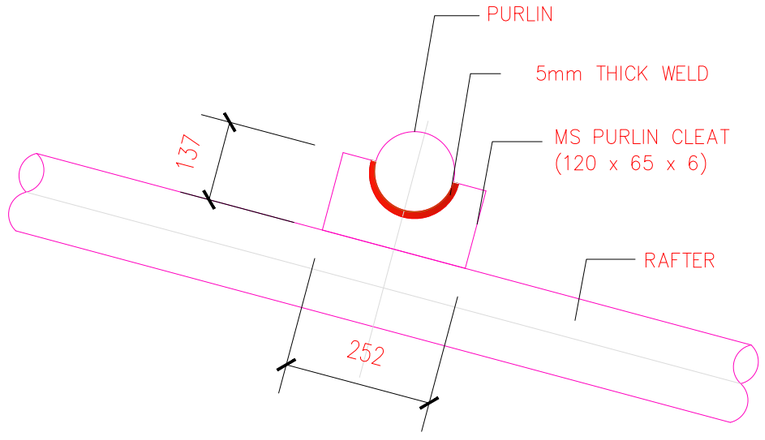

TRUSS MEMBER CONNECTION DETAILS

Khorlochhu

STRUCTURAL DRAWING

PROJECT TITLE	DRAWING TITLE
Construction of Doksum Primary School	AS_STATED_IN_DRAWING

NOTES

1. ALL DIMENSIONS ARE IN MILLIMETER & ELEVATION IN METER UNLESS SPECIFIED OTHERWISE.
2. ALL DIMENSIONS MEASURE UNFINISHED SURFACES UNLESS SPECIFIED OTHERWISE.
3. DIMENSIONS ARE TO BE READ AND NOT SCALED OFF.
4. ANY DISCREPANCIES IN THE DRAWING ARE TO BE BROUGHT TO THE IMMEDIATE NOTICE OF THE SUPERVISION TEAM.

CHECKED	APPROVED	DATE	DRAWING NO.
		MARCH, 2026	STR_12
			SCALE
			NTS

ELECTRICAL DRAWINGS

MASTER PLAN

Owner - Khorlochhu Hydro Power Limited
Location - Doksum New Township, Trashiyangtse

 འཁོར་ལོ་ཆུས་གསོ་མེ་ཚད་འཛིན།
Khorlochhu

Symbol	Description
	70W Slim LED Flood Light
	3x8 W Cob LED Pole Lamp
	Trenching route for cable laying
DF	Distribution Feeder Box
S	Package Substation-250kVA

Khorlochhu

ELECTRICAL DRAWING

PROJECT TITLE	DRAWING TITLE
Construction of Doksum Primary School	COMPOUND_LIGHTING

NOTES

1. ALL DIMENSIONS ARE IN MILLIMETER & ELEVATION IN METER UNLESS SPECIFIED OTHERWISE.
2. ALL DIMENSIONS MEASURE UNFINISHED SURFACES UNLESS SPECIFIED OTHERWISE.
3. DIMENSIONS ARE TO BE READ AND NOT SCALED OFF.
4. ANY DISCREPANCIES IN THE DRAWING ARE TO BE BROUGHT TO THE IMMEDIATE NOTICE OF THE SUPERVISION TEAM.

CHECKED	APPROVED	DATE	DRAWING NO.
			EL_1
		MARCH, 2026	SCALE
			NTS

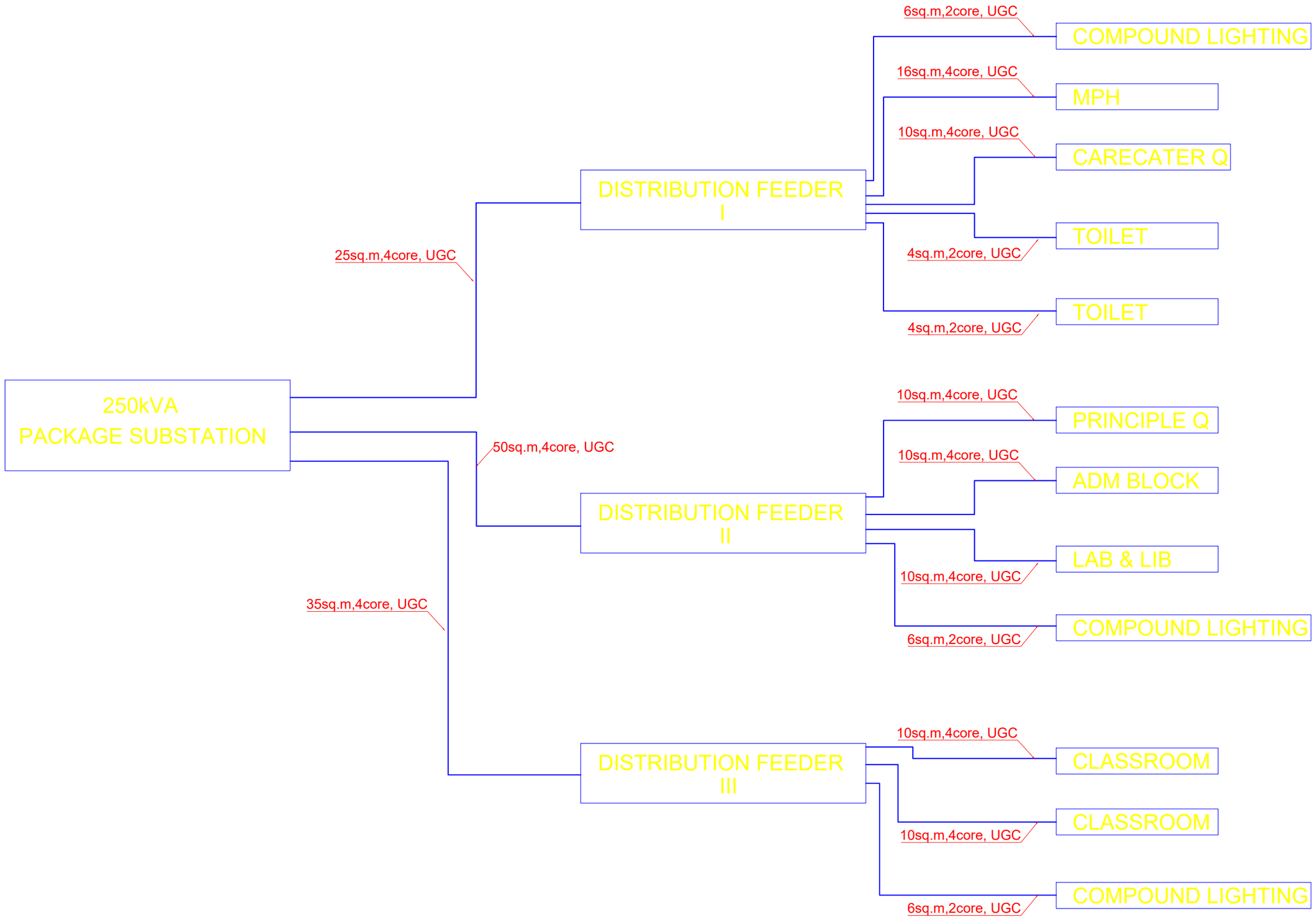

Khorlochhu

ELECTRICAL DRAWING

PROJECT TITLE	DRAWING TITLE
Construction of Doksum Primary School	COMPOUND_LIGHTING

NOTES

1. ALL DIMENSIONS ARE IN MILLIMETER & ELEVATION IN METER UNLESS SPECIFIED OTHERWISE.
2. ALL DIMENSIONS MEASURE UNFINISHED SURFACES UNLESS SPECIFIED OTHERWISE.
3. DIMENSIONS ARE TO BE READ AND NOT SCALED OFF.
4. ANY DISCREPANCIES IN THE DRAWING ARE TO BE BROUGHT TO THE IMMEDIATE NOTICE OF THE SUPERVISION TEAM.

CHECKED	APPROVED	DATE	DRAWING NO.
			EL_2
		MARCH, 2026	SCALE
			NTS

SCHEMATIC DIAGRAM OF FEEDER PILLAR I

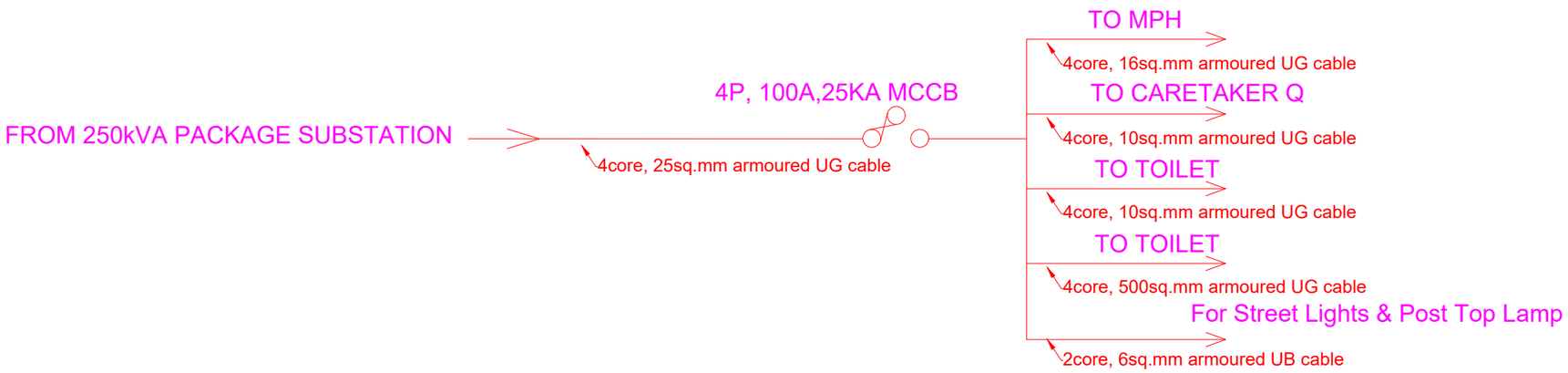

Connected Load in Watt

	R-Phase	Y-Phase	B-Phase
	14,616	15,104	14,502
	6,178	6,212	6,292
	90		
	90		
			1,472W
Total=	*20,974*	*21,316*	*22,266*

Total Connected Load= 64,556 W

Total Demand Load= 45,189 W
(Assuming Load Factor: 0.7)

Khorlochhu

ELECTRICAL DRAWING

PROJECT TITLE	DRAWING TITLE
Construction of Doksum Primary School	COMPOUND_LIGHTING

NOTES

1. ALL DIMENSIONS ARE IN MILLIMETER & ELEVATION IN METER UNLESS SPECIFIED OTHERWISE.
2. ALL DIMENSIONS MEASURE UNFINISHED SURFACES UNLESS SPECIFIED OTHERWISE.
3. DIMENSIONS ARE TO BE READ AND NOT SCALED OFF.
4. ANY DISCREPANCIES IN THE DRAWING ARE TO BE BROUGHT TO THE IMMEDIATE NOTICE OF THE SUPERVISION TEAM.

CHECKED	APPROVED	DATE	DRAWING NO.
			EL_3
		MARCH, 2026	SCALE
			NTS

SCHEMATIC DIAGRAM OF FEEDER PILLAR II

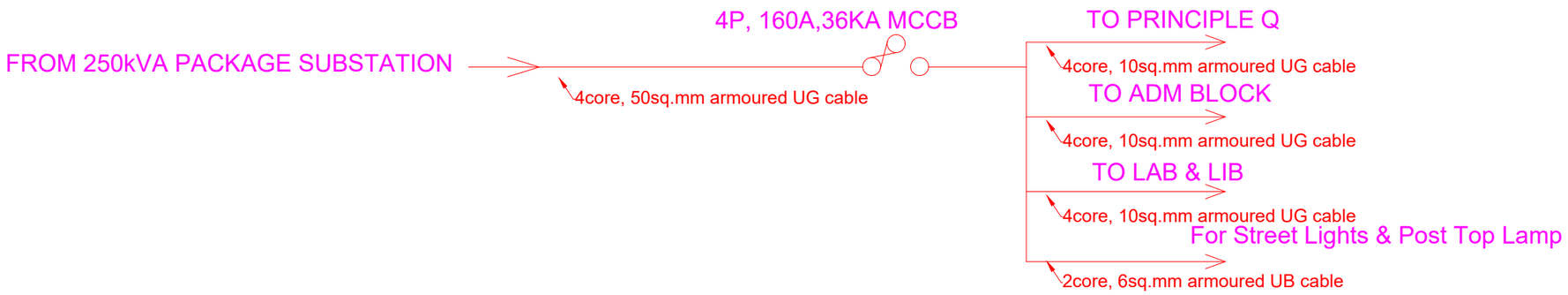

Connected Load in Watt

R-Phase	Y-Phase	B-Phase
10,538	10,269	10,408
12,468	12,595	12,702
10,790	10,586	10,500
	336	
Total= 33,796	33,786	33,610

Total Connected Load= 101,192 W

Total Demand Load= 70,834 W
(Assuming Load Factor: 0.7)

Khorlochhu

ELECTRICAL DRAWING

PROJECT TITLE	DRAWING TITLE
Construction of Doksum Primary School	COMPOUND_LIGHTING

NOTES

1. ALL DIMENSIONS ARE IN MILLIMETER & ELEVATION IN METER UNLESS SPECIFIED OTHERWISE.
2. ALL DIMENSIONS MEASURE UNFINISHED SURFACES UNLESS SPECIFIED OTHERWISE.
3. DIMENSIONS ARE TO BE READ AND NOT SCALED OFF.
4. ANY DISCREPANCIES IN THE DRAWING ARE TO BE BROUGHT TO THE IMMEDIATE NOTICE OF THE SUPERVISION TEAM.

CHECKED	APPROVED	DATE	DRAWING NO.
			EL_4
		MARCH, 2026	SCALE
			NTS

SCHEMATIC DIAGRAM OF FEEDER PILLAR III

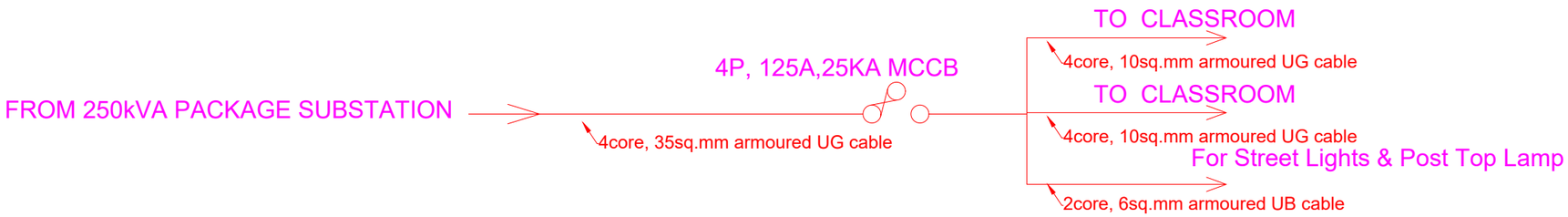

Connected Load in Watt

	R-Phase	*Y-Phase*	*B-Phase*
	12,762	12,720	12,762
	12,762	12,720	12,762
	360		
Total=	***25,884***	***25,440***	***25,524***

Total Connected Load=76,848 W

Total Demand Load= 53,794 W
(Assuming Load Factor: 0.7)

Khorlochhu

ELECTRICAL DRAWING

PROJECT TITLE	DRAWING TITLE
Construction of Doksum Primary School	COMPOUND_LIGHTING

NOTES

1. ALL DIMENSIONS ARE IN MILLIMETER & ELEVATION IN METER UNLESS SPECIFIED OTHERWISE.
2. ALL DIMENSIONS MEASURE UNFINISHED SURFACES UNLESS SPECIFIED OTHERWISE.
3. DIMENSIONS ARE TO BE READ AND NOT SCALED OFF.
4. ANY DISCREPANCIES IN THE DRAWING ARE TO BE BROUGHT TO THE IMMEDIATE NOTICE OF THE SUPERVISION TEAM.

CHECKED	APPROVED	DATE	DRAWING NO.
			EL_5
		MARCH, 2026	SCALE
			NTS

STRUCTURAL DRAWINGS

RETAINING WALL

Owner - Khorlochhu Hydro Power Limited
Location - Doksum New Township, Trashiyangtse

Khorlochhu

NOTE:

1. DEPTH OF FOUNDATION SHALL BE AT LEAST 500M FROM FIRM GROUND LEVEL.
2. A SEPARATION GAP OF 50-100MM SHALL BE PROVIDED AT MAXIMUM OF 10M
   LENGTH OF WALL.
3. THROUGH STONES & BONDING ELEMENT TO BE PROVIDED AT EVERY 1 -1.5M
   INTERVAL HORIZONTALLY THROUGHOUT THE LENGTH OF THE WALL.
4. TO ATTAIN GOOD BONDING STRENGTH, MINIMUM OF TWO WEEKS.

Khorlochhu	STRUCTURAL DRAWING		NOTES	CHECKED	APPROVED	DATE	DRAWING NO.
	PROJECT TITLE	DRAWING TITLE	1. ALL DIMENSIONS ARE IN MILLIMETER & ELEVATION IN METER UNLESS SPECIFIED OTHERWISE. 2. ALL DIMENSIONS MEASURE UNFINISHED SURFACES UNLESS SPECIFIED OTHERWISE. 3. DIMENSIONS ARE TO BE READ AND NOT SCALED OFF. 4. ANY DISCREPANCIES IN THE DRAWING ARE TO BE BROUGHT TO THE IMMEDIATE NOTICE OF THE SUPERVISION TEAM.				STR_1
	Construction of Doksum Primary School	STRUCTURE_NOTES				MARCH, 2026	SCALE NTS

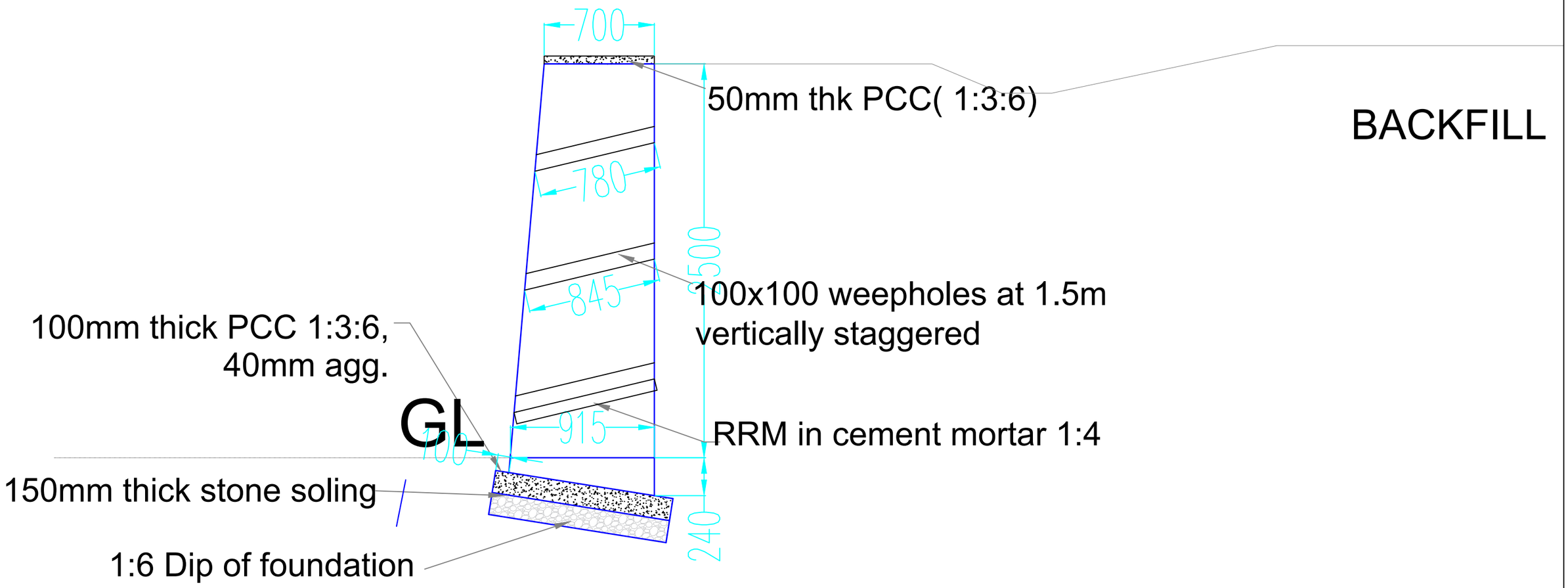

2.5 METER RETAINING WALL

Khorlochhu	STRUCTURAL DRAWING	NOTES	CHECKED	APPROVED	DATE	DRAWING NO.
	PROJECT TITLE: Construction of Doksum Primary School	1. ALL DIMENSIONS ARE IN MILLIMETER & ELEVATION IN METER UNLESS SPECIFIED OTHERWISE. 2. ALL DIMENSIONS MEASURE UNFINISHED SURFACES UNLESS SPECIFIED OTHERWISE. 3. DIMENSIONS ARE TO BE READ AND NOT SCALED OFF. 4. ANY DISCREPANCIES IN THE DRAWING ARE TO BE BROUGHT TO THE IMMEDIATE NOTICE OF THE SUPERVISION TEAM.				STR_02
	DRAWING TITLE: RRM_WALL				MARCH, 2026	SCALE: NTS

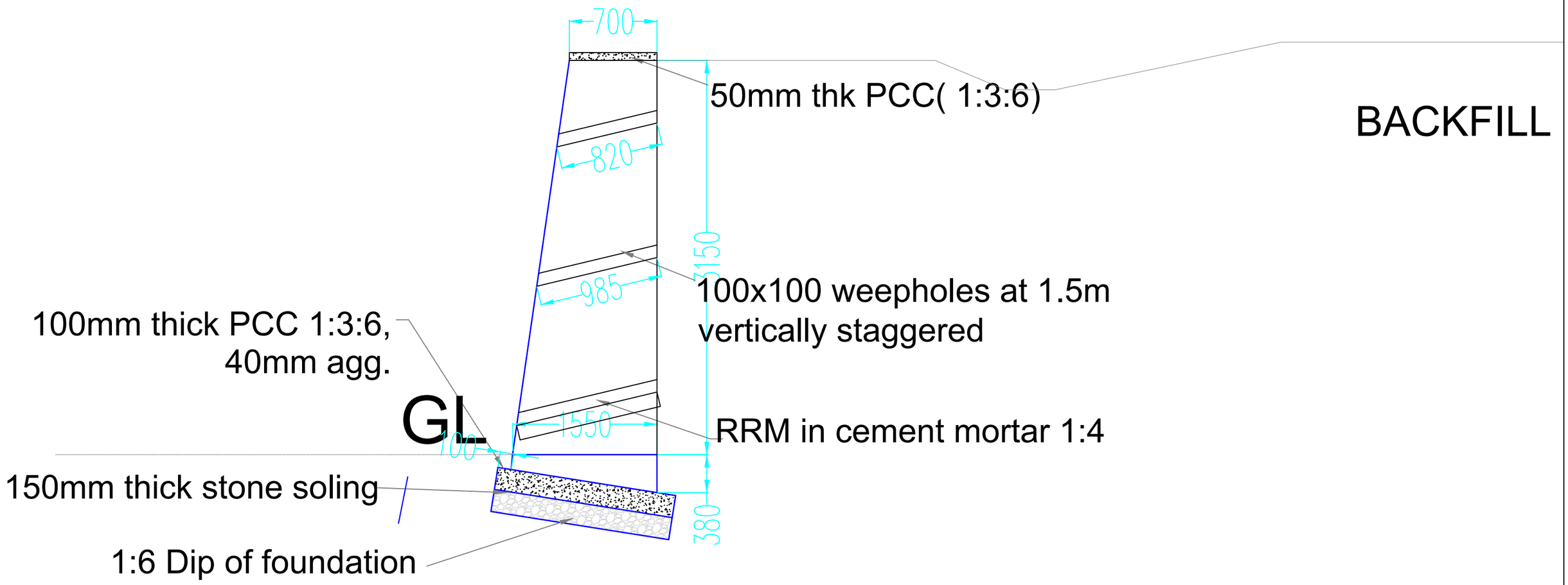

3.15 METER RETAINING WALL

Khorlochhu	STRUCTURAL DRAWING	NOTES	CHECKED	APPROVED	DATE	DRAWING NO.
	PROJECT TITLE: Construction of Doksum Primary School	DRAWING TITLE: RRM_WALL				STR_03
		1. ALL DIMENSIONS ARE IN MILLIMETER & ELEVATION IN METER UNLESS SPECIFIED OTHERWISE. 2. ALL DIMENSIONS MEASURE UNFINISHED SURFACES UNLESS SPECIFIED OTHERWISE. 3. DIMENSIONS ARE TO BE READ AND NOT SCALED OFF. 4. ANY DISCREPANCIES IN THE DRAWING ARE TO BE BROUGHT TO THE IMMEDIATE NOTICE OF THE SUPERVISION TEAM.			MARCH, 2026	SCALE: NTS

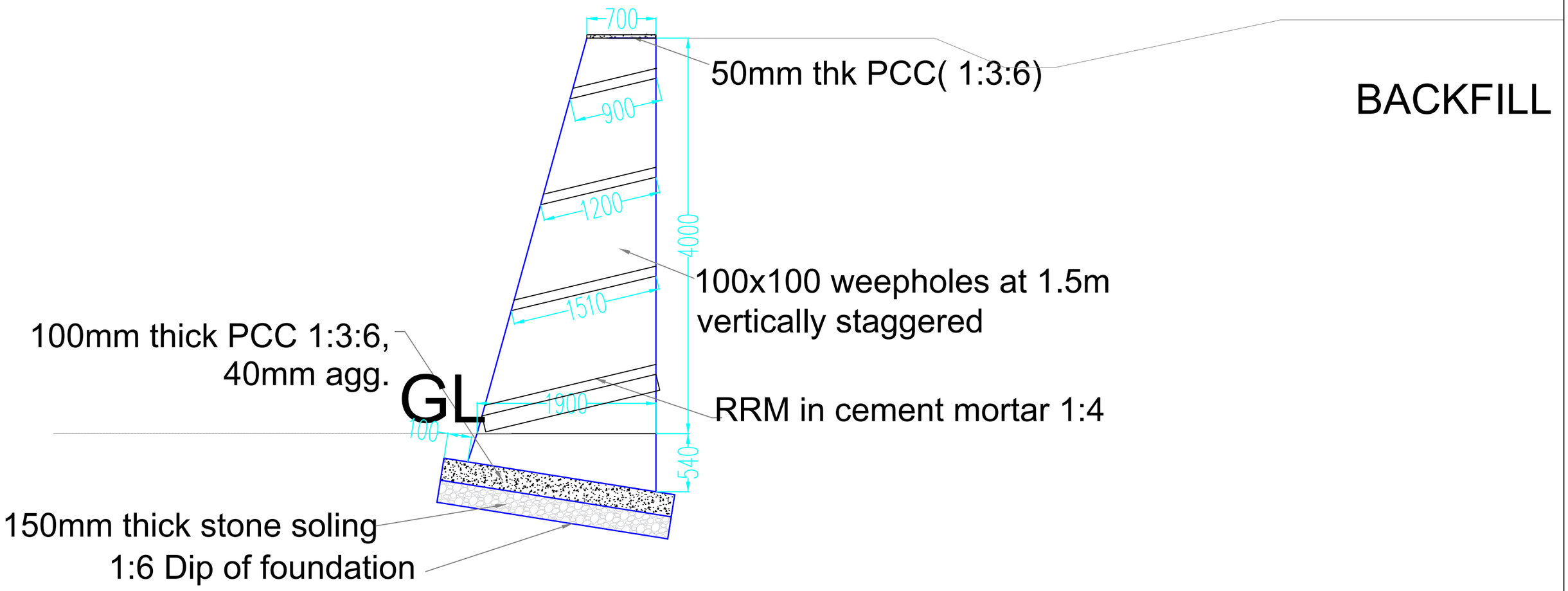

4METER RETAINING WALL

Khorlochhu

STRUCTURAL DRAWING		NOTES	CHECKED	APPROVED	DATE	DRAWING NO.
PROJECT TITLE	DRAWING TITLE	1. ALL DIMENSIONS ARE IN MILLIMETER & ELEVATION IN METER UNLESS SPECIFIED OTHERWISE. 2. ALL DIMENSIONS MEASURE UNFINISHED SURFACES UNLESS SPECIFIED OTHERWISE. 3. DIMENSIONS ARE TO BE READ AND NOT SCALED OFF. 4. ANY DISCREPANCIES IN THE DRAWING ARE TO BE BROUGHT TO THE IMMEDIATE NOTICE OF THE SUPERVISION TEAM.				STR_04
Construction of Doksum Primary School	RRM_WALL				MARCH, 2026	SCALE NTS

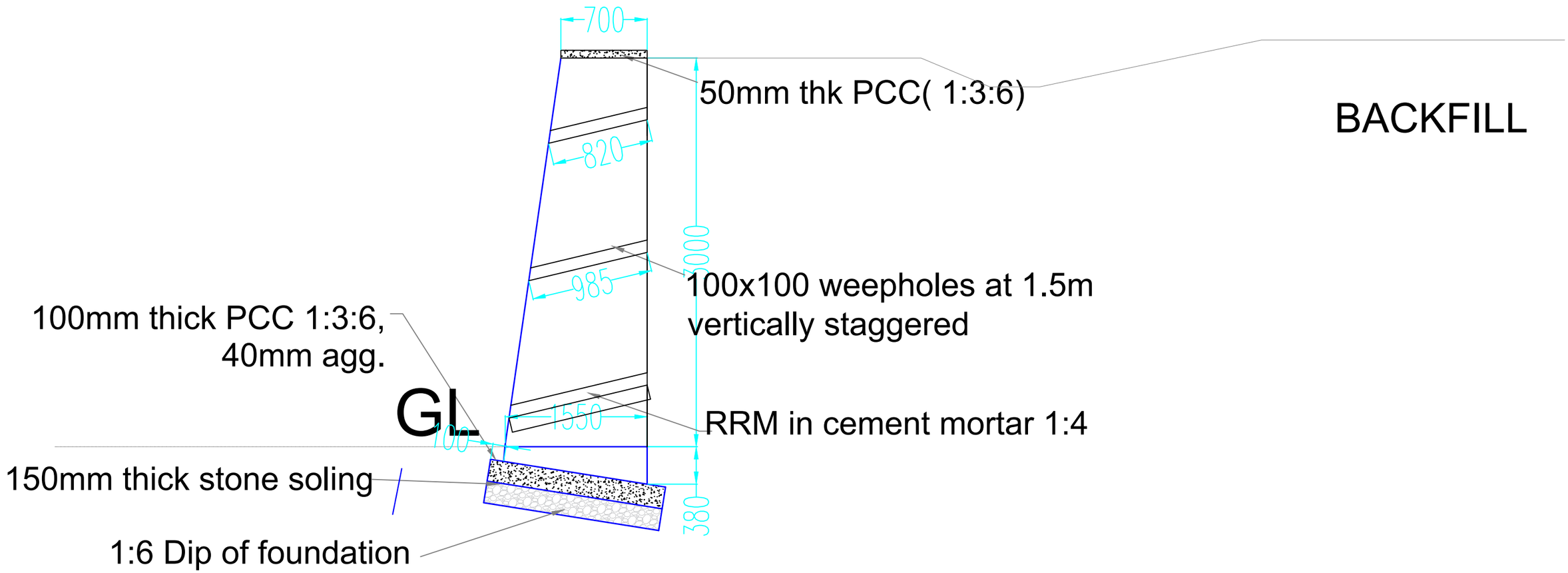

3 METER RETAINING WALL

Khorlochhu

STRUCTURAL DRAWING		NOTES	CHECKED	APPROVED	DATE	DRAWING NO.
PROJECT TITLE	DRAWING TITLE	1. ALL DIMENSIONS ARE IN MILLIMETER & ELEVATION IN METER UNLESS SPECIFIED OTHERWISE. 2. ALL DIMENSIONS MEASURE UNFINISHED SURFACES UNLESS SPECIFIED OTHERWISE. 3. DIMENSIONS ARE TO BE READ AND NOT SCALED OFF. 4. ANY DISCREPANCIES IN THE DRAWING ARE TO BE BROUGHT TO THE IMMEDIATE NOTICE OF THE SUPERVISION TEAM.				STR_05
Construction of Doksum Primary School	RRM_WALL				MARCH, 2026	SCALE NTS

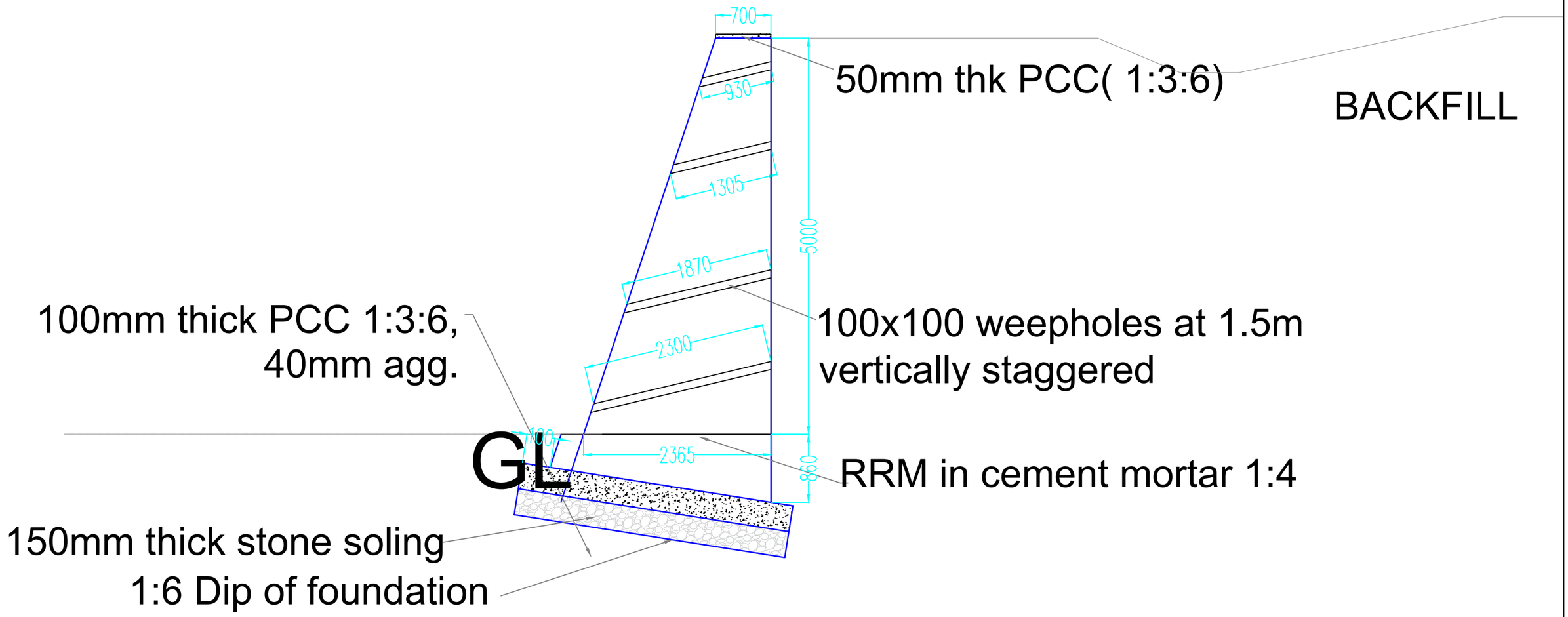

5.00 METER RETAINING WALL

Khorlochhu

STRUCTURAL DRAWING		NOTES	CHECKED	APPROVED	DATE	DRAWING NO.
PROJECT TITLE	DRAWING TITLE	1. ALL DIMENSIONS ARE IN MILLIMETER & ELEVATION IN METER UNLESS SPECIFIED OTHERWISE. 2. ALL DIMENSIONS MEASURE UNFINISHED SURFACES UNLESS SPECIFIED OTHERWISE. 3. DIMENSIONS ARE TO BE READ AND NOT SCALED OFF. 4. ANY DISCREPANCIES IN THE DRAWING ARE TO BE BROUGHT TO THE IMMEDIATE NOTICE OF THE SUPERVISION TEAM.				STR_06
Construction of Doksum Primary School	RRM_WALL				MARCH, 2026	SCALE NTS

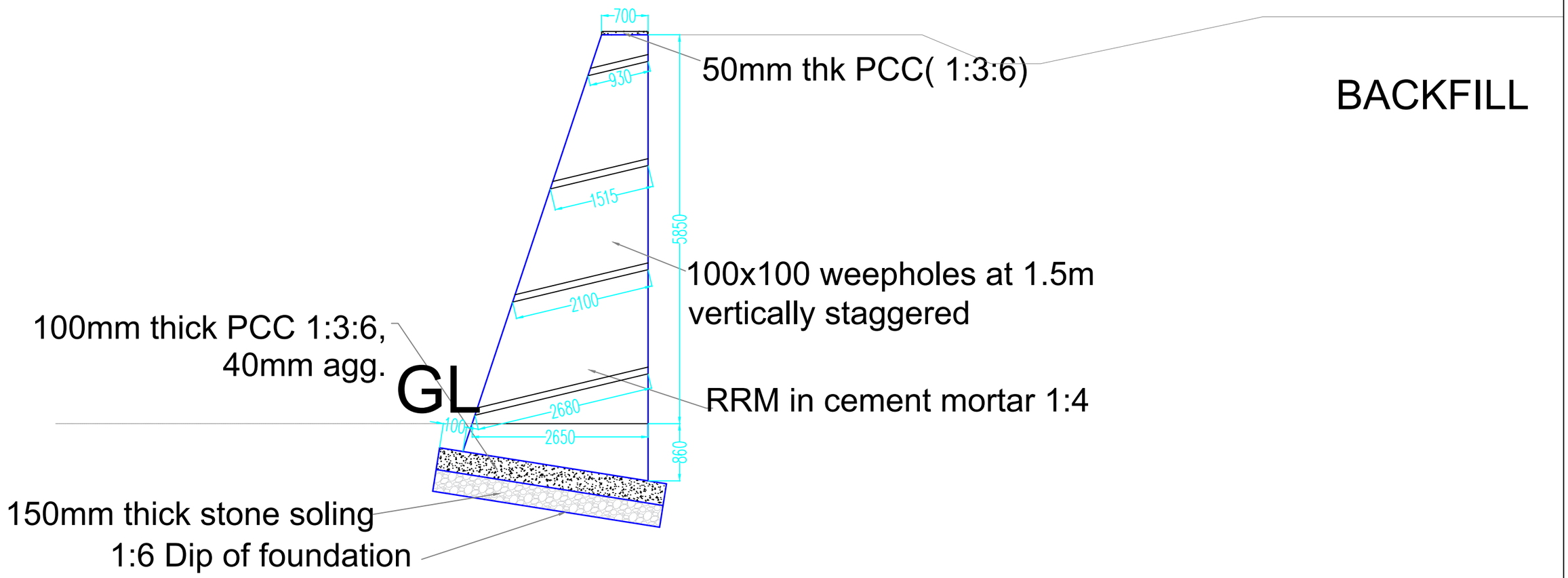

5.85 METER RETAINING WALL

Khorlochhu	STRUCTURAL DRAWING		NOTES	CHECKED	APPROVED	DATE	DRAWING NO.
	PROJECT TITLE	DRAWING TITLE	1. ALL DIMENSIONS ARE IN MILLIMETER & ELEVATION IN METER UNLESS SPECIFIED OTHERWISE. 2. ALL DIMENSIONS MEASURE UNFINISHED SURFACES UNLESS SPECIFIED OTHERWISE. 3. DIMENSIONS ARE TO BE READ AND NOT SCALED OFF. 4. ANY DISCREPANCIES IN THE DRAWING ARE TO BE BROUGHT TO THE IMMEDIATE NOTICE OF THE SUPERVISION TEAM.				STR_07
	Construction of Doksum Primary School	RRM_WALL				MARCH, 2026	SCALE NTS

ARCHITECTURAL DRAWINGS

CHAIN-LINK FENCE

Owner - Khorlochhu Hydro Power Limited
Location - Doksum New Township, Trashiyangtse

Khorlochhu

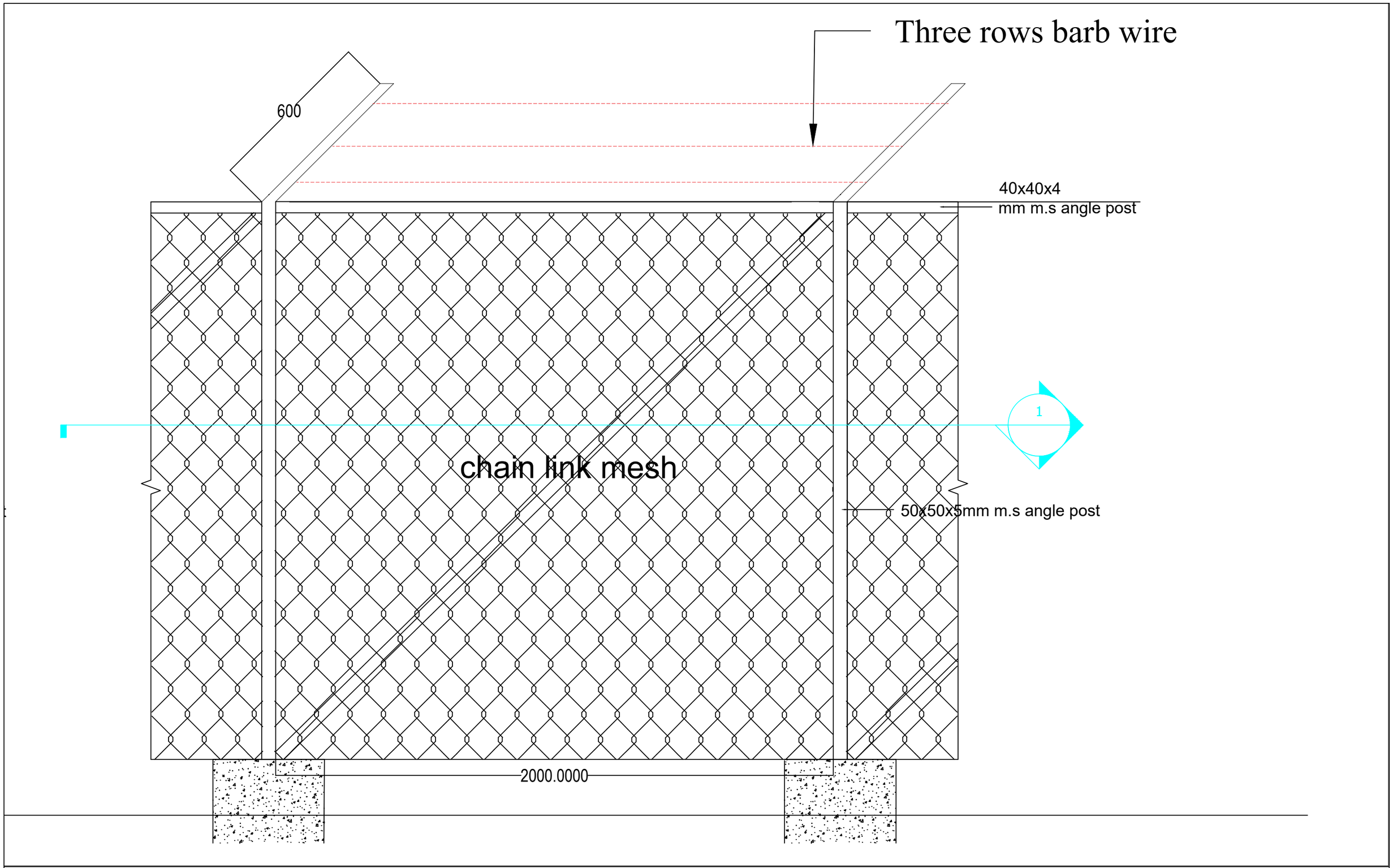

Khorlochhu

ARCHITECTURAL DRAWING

PROJECT TITLE	DRAWING TITLE
Construction of Doksum Primary School	CHAINLINK_FENCE

NOTES

1. ALL DIMENSIONS ARE IN MILLIMETER & ELEVATION IN METER UNLESS SPECIFIED OTHERWISE.
2. ALL DIMENSIONS MEASURE UNFINISHED SURFACES UNLESS SPECIFIED OTHERWISE.
3. DIMENSIONS ARE TO BE READ AND NOT SCALED OFF.
4. ANY DISCREPANCIES IN THE DRAWING ARE TO BE BROUGHT TO THE IMMEDIATE NOTICE OF THE SUPERVISION TEAM.

CHECKED	APPROVED	DATE	DRAWING NO.
		MARCH, 2026	AR_05
			SCALE
			NTS

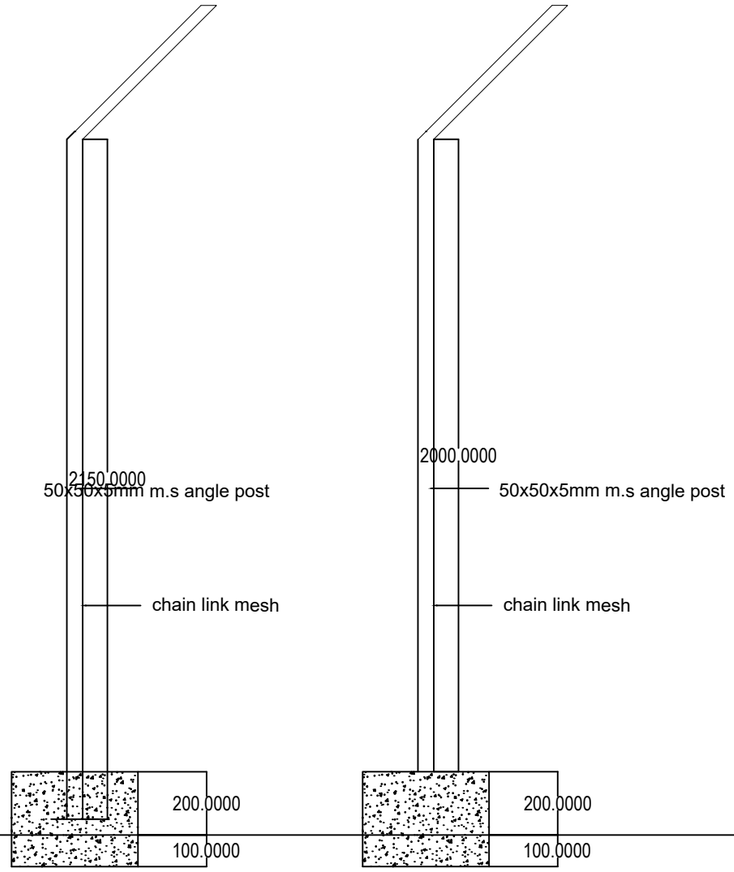

SECTION A

SECTION B

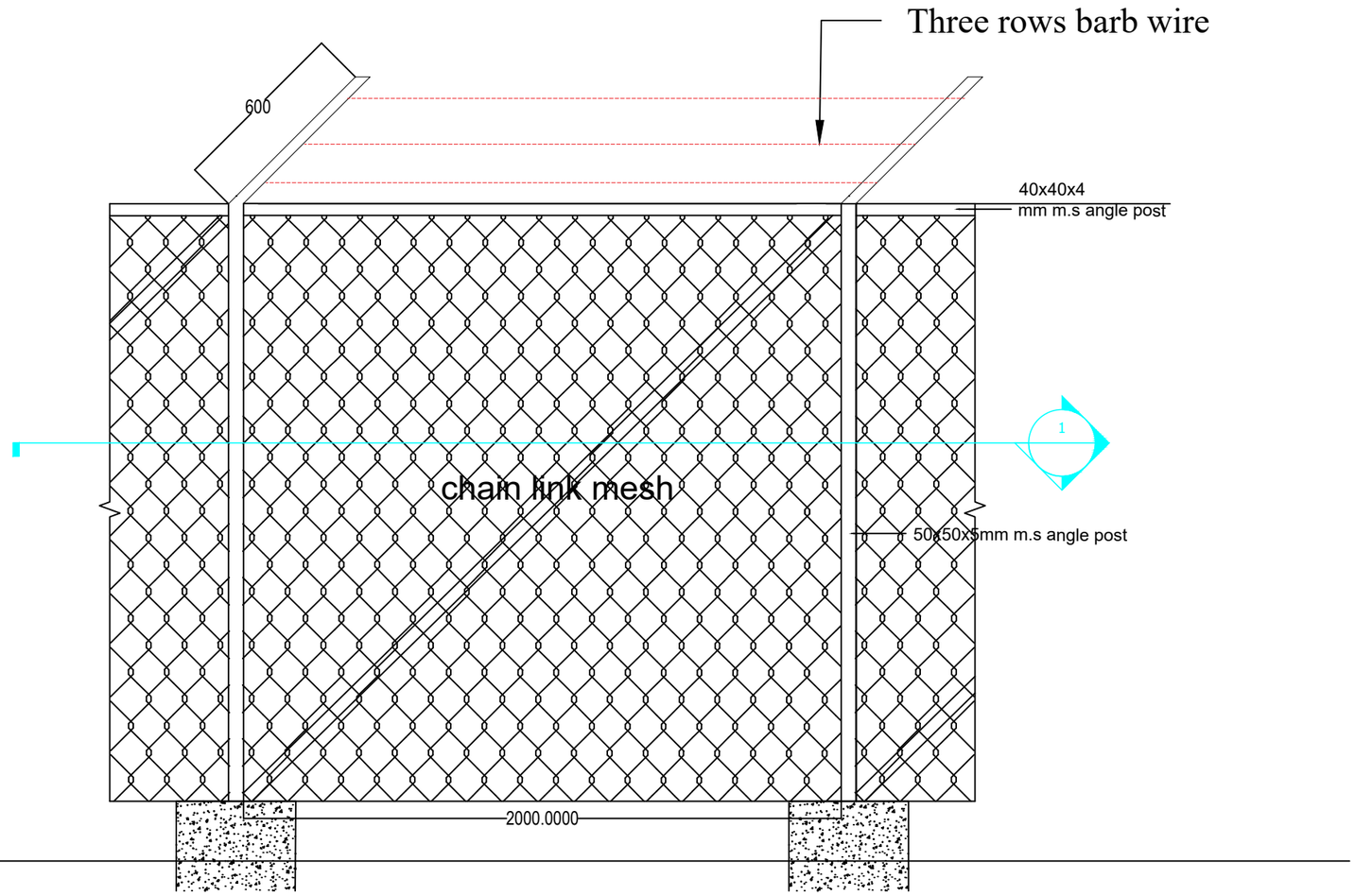

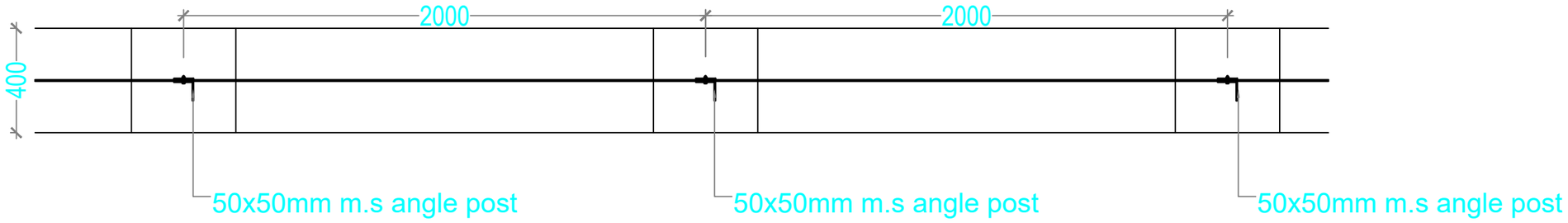

Khorlochhu

ARCHITECTURAL DRAWING

PROJECT TITLE	DRAWING TITLE
Construction of Doksum Primary School	CHAINLINK_FENCE

NOTES

1. ALL DIMENSIONS ARE IN MILLIMETER & ELEVATION IN METER UNLESS SPECIFIED OTHERWISE.
2. ALL DIMENSIONS MEASURE UNFINISHED SURFACES UNLESS SPECIFIED OTHERWISE.
3. DIMENSIONS ARE TO BE READ AND NOT SCALED OFF.
4. ANY DISCREPANCIES IN THE DRAWING ARE TO BE BROUGHT TO THE IMMEDIATE NOTICE OF THE SUPERVISION TEAM.

CHECKED	APPROVED	DATE	DRAWING NO.
			AR_06
		MARCH, 2026	SCALE
			NTS

ARCHITECTURAL DRAWINGS

MAIN GATE

Owner - Khorlochhu Hydro Power Limited
Location - Doksum New Township, Trashiyangtse

Khorlochhu

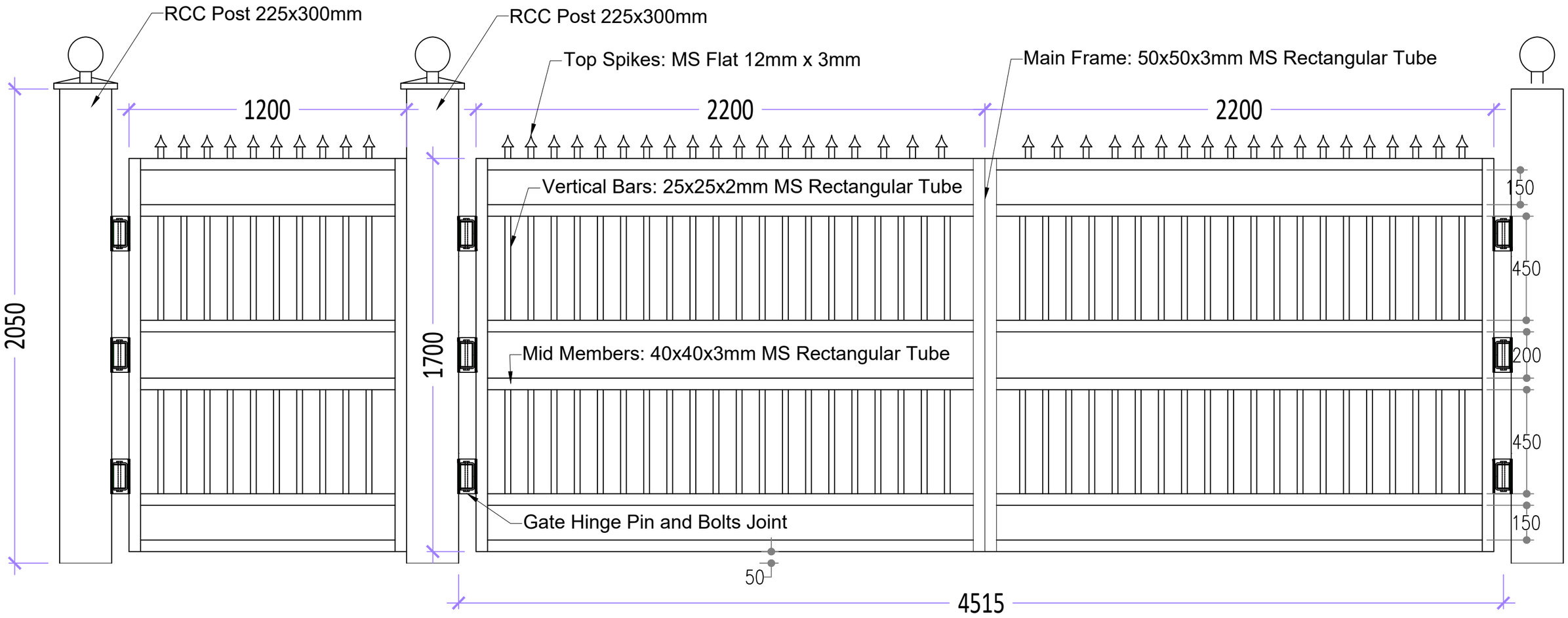

Khorlochhu

ARCHITECTURAL DRAWING

PROJECT TITLE	DRAWING TITLE
Construction of Doksum Primary School	AS_STATED_IN_THE_DRAWING

NOTES

1. ALL DIMENSIONS ARE IN MILLIMETER & ELEVATION IN METER UNLESS SPECIFIED OTHERWISE.
2. ALL DIMENSIONS MEASURE UNFINISHED SURFACES UNLESS SPECIFIED OTHERWISE.
3. DIMENSIONS ARE TO BE READ AND NOT SCALED OFF.
4. ANY DISCREPANCIES IN THE DRAWING ARE TO BE BROUGHT TO THE IMMEDIATE NOTICE OF THE SUPERVISION TEAM.

CHECKED	APPROVED	DATE	DRAWING NO.
			AR_01
		MARCH, 2026	SCALE
			NTS

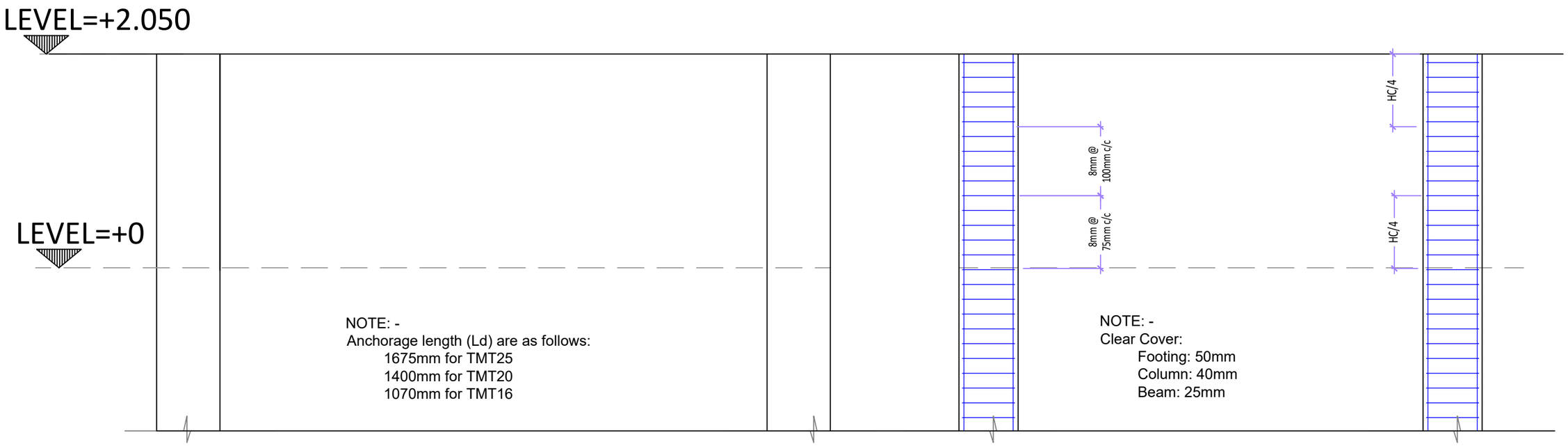

COLUMN AT LEVEL 0.00m AND 2.05M

DUCTILE DETAILING IN BEAMS AND COLUMNS

Khorlochhu	**ARCHITECTURAL DRAWING**	**NOTES**	**CHECKED**	**APPROVED**	**DATE**	**DRAWING NO.**
	PROJECT TITLE / **DRAWING TITLE**	1. ALL DIMENSIONS ARE IN MILLIMETER & ELEVATION IN METER UNLESS SPECIFIED OTHERWISE. 2. ALL DIMENSIONS MEASURE UNFINISHED SURFACES UNLESS SPECIFIED OTHERWISE. 3. DIMENSIONS ARE TO BE READ AND NOT SCALED OFF. 4. ANY DISCREPANCIES IN THE DRAWING ARE TO BE BROUGHT TO THE IMMEDIATE NOTICE OF THE SUPERVISION TEAM.				**AR_02**
	Construction of Doksum Primary School / **AS_STATED_IN_THE_DRAWING**				MARCH, 2026	**SCALE** NTS

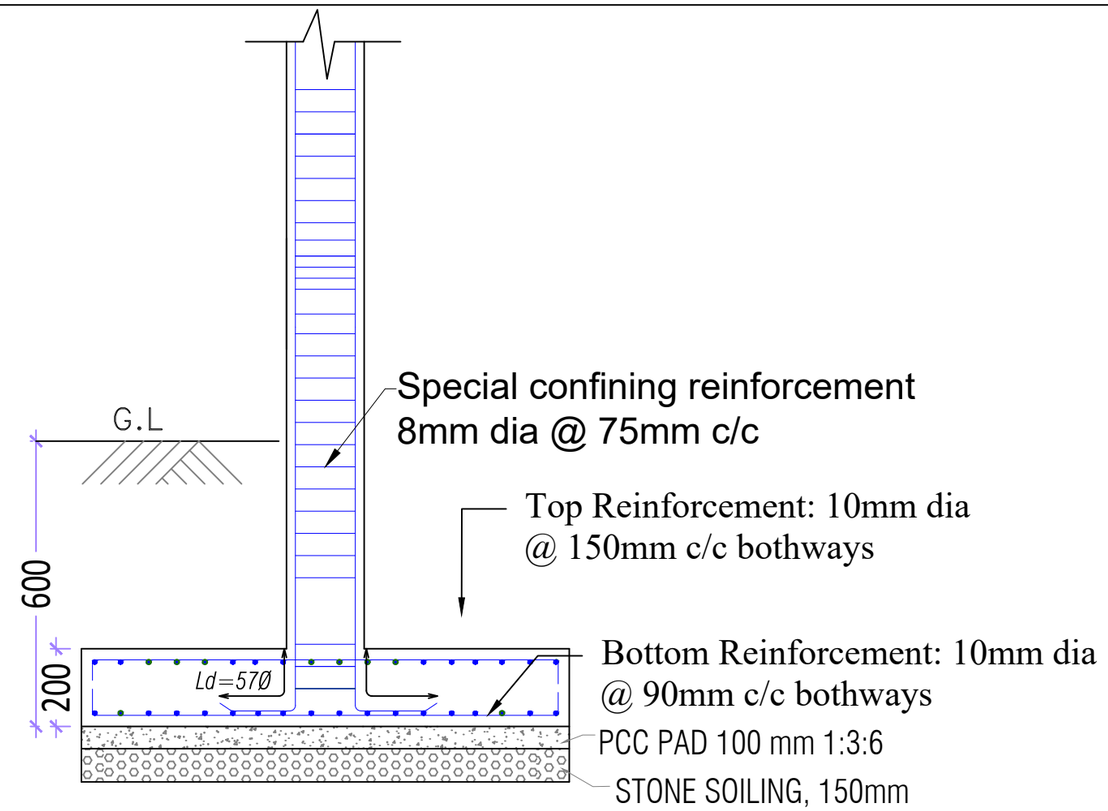

Typical Footing Details (Section A-A)

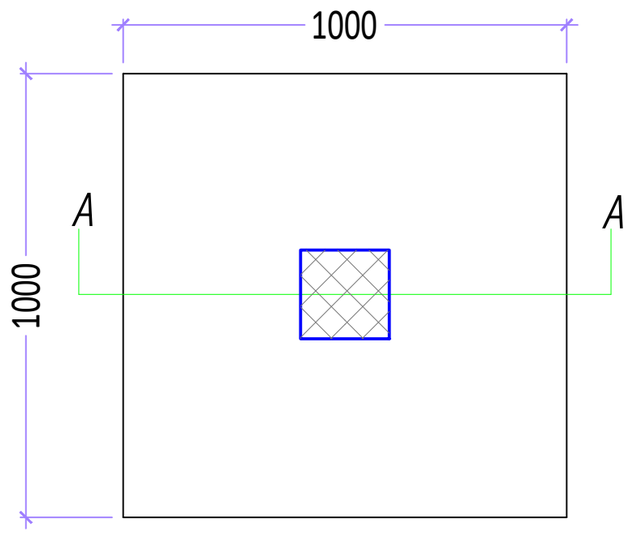

Footing Plan

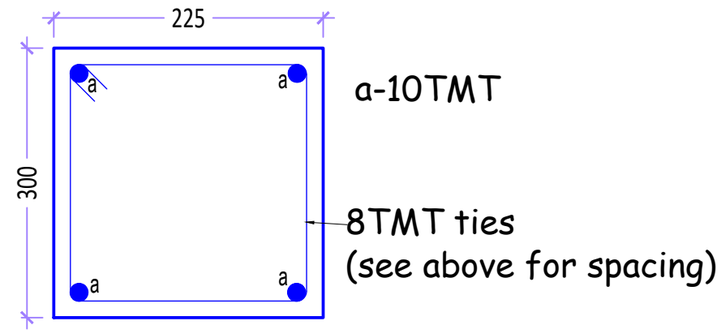

C1 - 250x300mm

Khorlochhu	ARCHITECTURAL DRAWING	NOTES	CHECKED	APPROVED	DATE	DRAWING NO.
	PROJECT TITLE: Construction of Doksum Primary School	1. ALL DIMENSIONS ARE IN MILLIMETER & ELEVATION IN METER UNLESS SPECIFIED OTHERWISE. 2. ALL DIMENSIONS MEASURE UNFINISHED SURFACES UNLESS SPECIFIED OTHERWISE. 3. DIMENSIONS ARE TO BE READ AND NOT SCALED OFF. 4. ANY DISCREPANCIES IN THE DRAWING ARE TO BE BROUGHT TO THE IMMEDIATE NOTICE OF THE SUPERVISION TEAM.				AR_03
	DRAWING TITLE: AS_STATED_IN_THE_DRAWING				MARCH, 2026	SCALE: NTS

ARCHITECTURAL DRAWINGS

RRM WATER TANK

Owner - Khorlochhu Hydro Power Limited
Location - Doksum New Township, Trashiyangtse

Khorlochhu

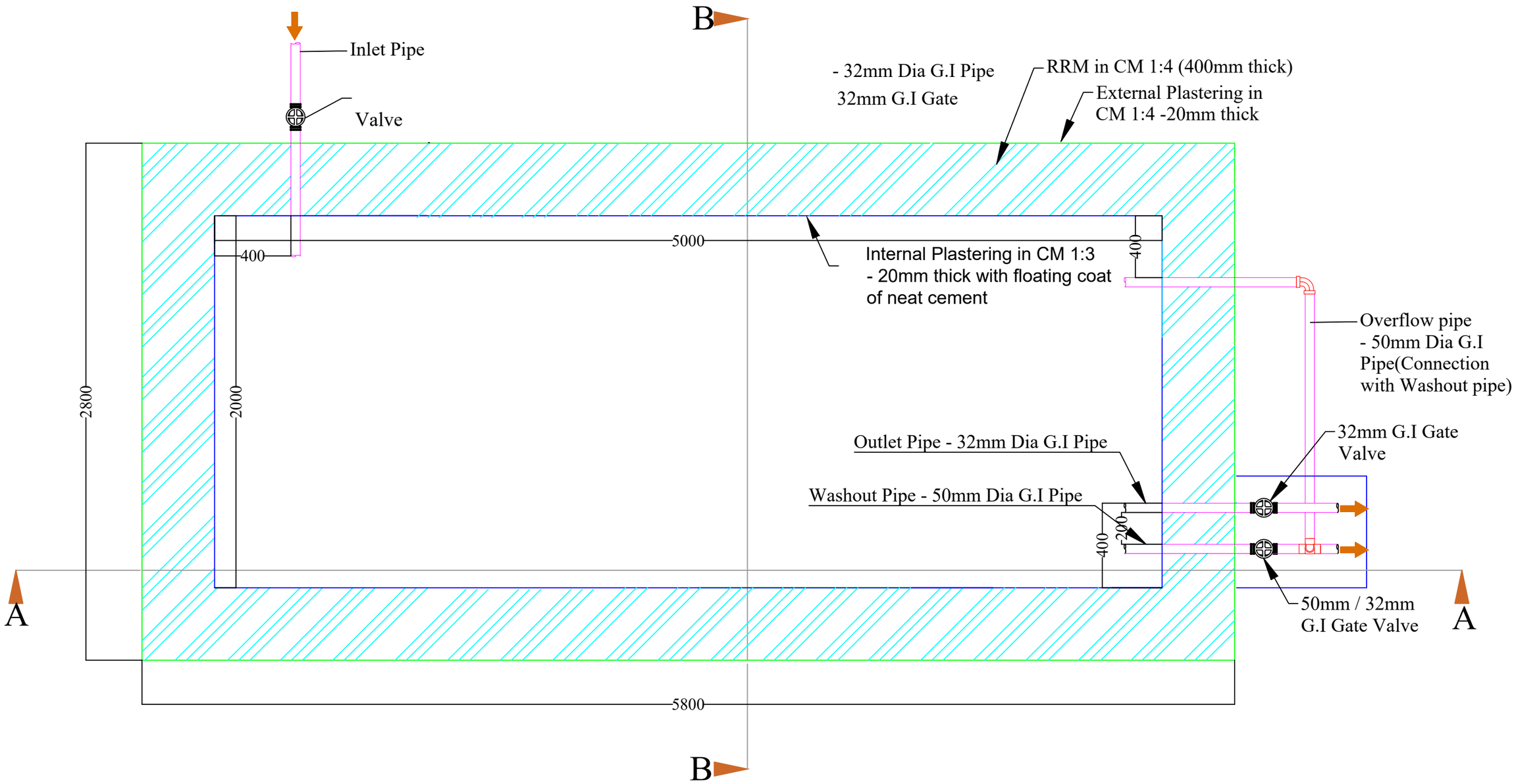

PLAN FOR MASONRY TANK

Khorlochhu

ARCHITECTURAL DRAWING		NOTES	CHECKED	APPROVED	DATE	DRAWING NO.
PROJECT TITLE	DRAWING TITLE	1. ALL DIMENSIONS ARE IN MILLIMETER & ELEVATION IN METER UNLESS SPECIFIED OTHERWISE. 2. ALL DIMENSIONS MEASURE UNFINISHED SURFACES UNLESS SPECIFIED OTHERWISE. 3. DIMENSIONS ARE TO BE READ AND NOT SCALED OFF. 4. ANY DISCREPANCIES IN THE DRAWING ARE TO BE BROUGHT TO THE IMMEDIATE NOTICE OF THE SUPERVISION TEAM.				AR_01
Construction of Doksum Primary School	AS_STATED_IN_THE_DRAWING				MARCH, 2026	SCALE NTS

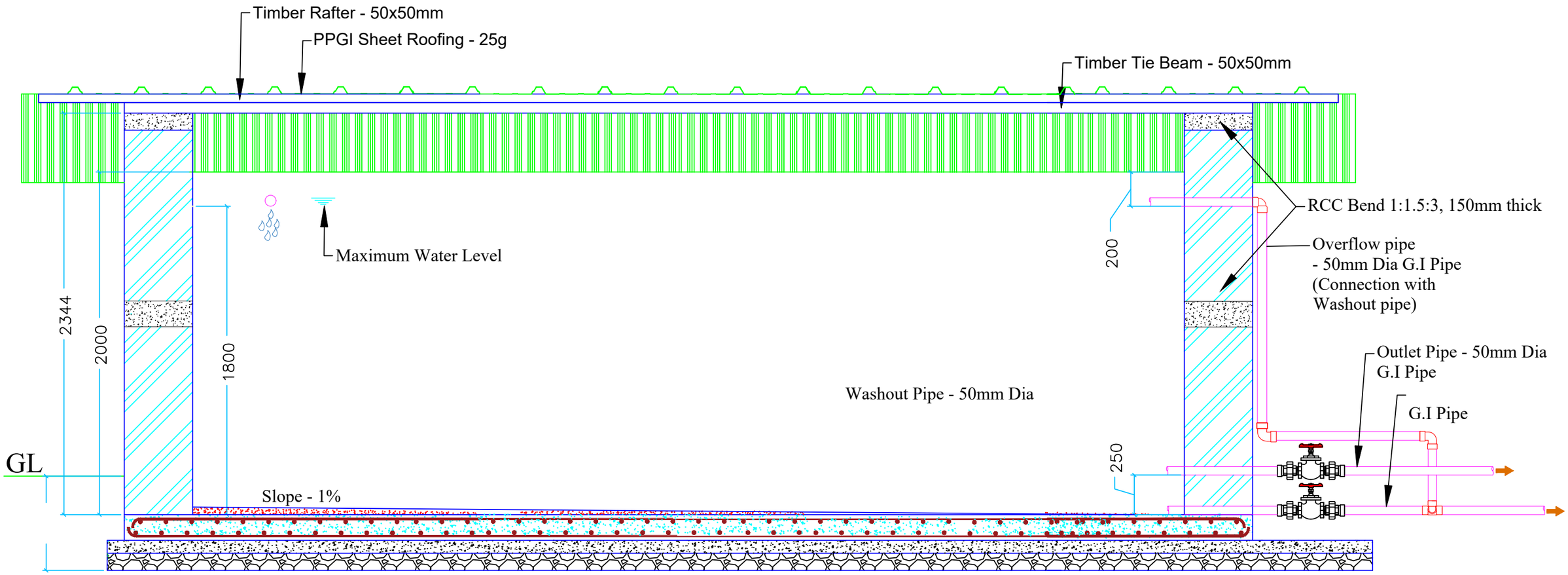

SECTION A - A

Khorlochhu

ARCHITECTURAL DRAWING

PROJECT TITLE	DRAWING TITLE
Construction of Doksum Primary School	AS_STATED_IN_THE_DRAWING

NOTES

1. ALL DIMENSIONS ARE IN MILLIMETER & ELEVATION IN METER UNLESS SPECIFIED OTHERWISE.
2. ALL DIMENSIONS MEASURE UNFINISHED SURFACES UNLESS SPECIFIED OTHERWISE.
3. DIMENSIONS ARE TO BE READ AND NOT SCALED OFF.
4. ANY DISCREPANCIES IN THE DRAWING ARE TO BE BROUGHT TO THE IMMEDIATE NOTICE OF THE SUPERVISION TEAM.

CHECKED	APPROVED	DATE	DRAWING NO.
			AR_02
		MARCH, 2026	SCALE
			NTS

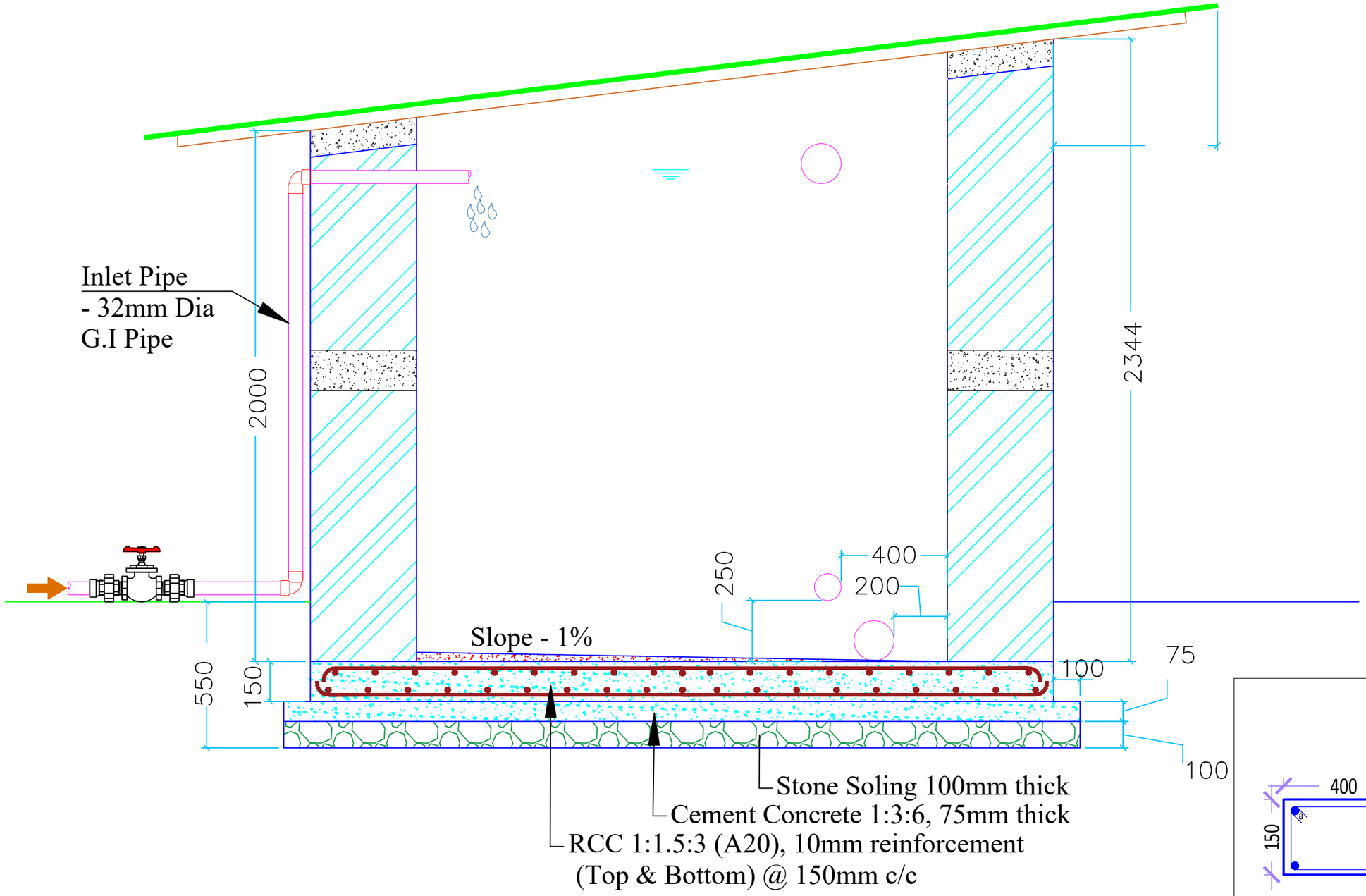

SECTION B - B

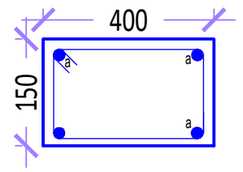

a- 10TMT

8 mm dia @ 150 mm c/c
• @ 100 mm c/c near corners

Tie & Intermediate Beam - 400x150mm

Khorlochhu	ARCHITECTURAL DRAWING	NOTES	CHECKED	APPROVED	DATE	DRAWING NO.
	PROJECT TITLE: Construction of Doksum Primary School	1. ALL DIMENSIONS ARE IN MILLIMETER & ELEVATION IN METER UNLESS SPECIFIED OTHERWISE. 2. ALL DIMENSIONS MEASURE UNFINISHED SURFACES UNLESS SPECIFIED OTHERWISE. 3. DIMENSIONS ARE TO BE READ AND NOT SCALED OFF. 4. ANY DISCREPANCIES IN THE DRAWING ARE TO BE BROUGHT TO THE IMMEDIATE NOTICE OF THE SUPERVISION TEAM.				AR_03
	DRAWING TITLE: AS_STATED_IN_THE_DRAWING				MARCH, 2026	SCALE: NTS

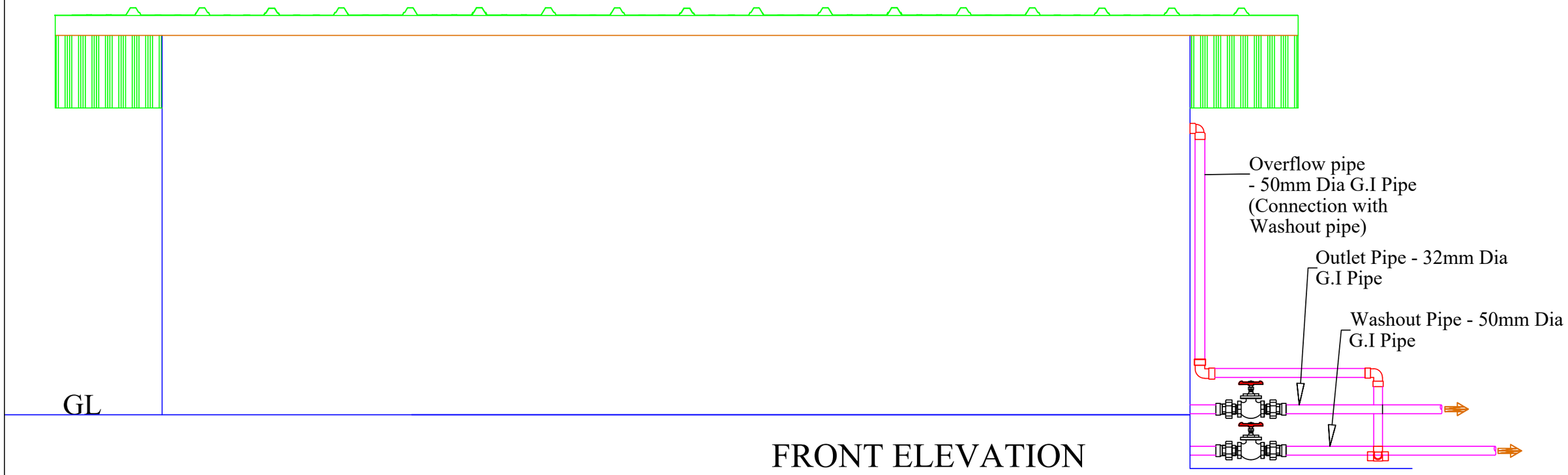

FRONT ELEVATION

Khorlochhu

ARCHITECTURAL DRAWING

PROJECT TITLE	DRAWING TITLE
Construction of Doksum Primary School	AS_STATED_IN_THE_DRAWING

NOTES

1. ALL DIMENSIONS ARE IN MILLIMETER & ELEVATION IN METER UNLESS SPECIFIED OTHERWISE.
2. ALL DIMENSIONS MEASURE UNFINISHED SURFACES UNLESS SPECIFIED OTHERWISE.
3. DIMENSIONS ARE TO BE READ AND NOT SCALED OFF.
4. ANY DISCREPANCIES IN THE DRAWING ARE TO BE BROUGHT TO THE IMMEDIATE NOTICE OF THE SUPERVISION TEAM.

CHECKED	APPROVED	DATE	DRAWING NO.
			AR_04
		MARCH, 2026	SCALE
			NTS

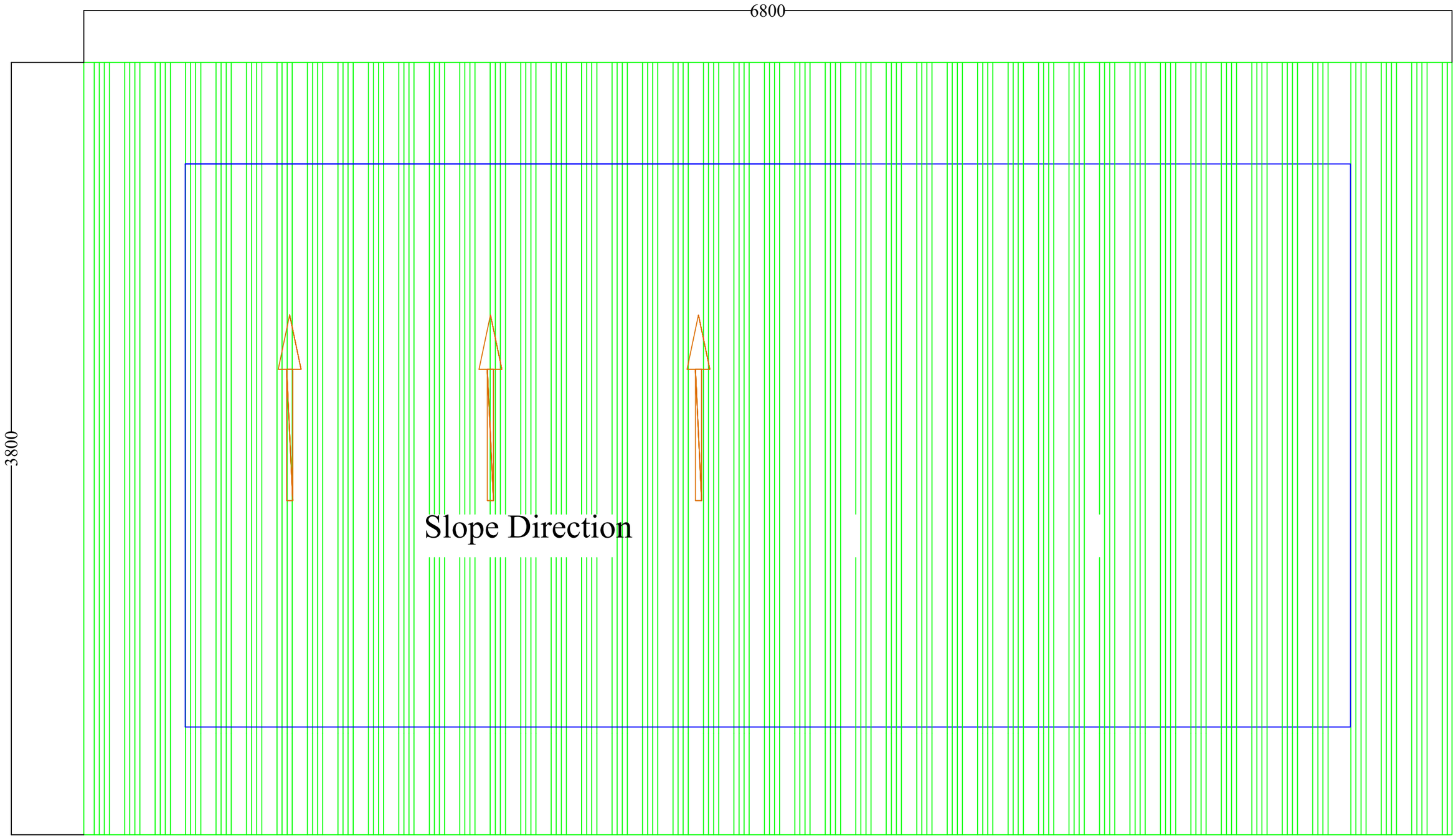

ROOF PLAN

Khorlochhu

ARCHITECTURAL DRAWING

PROJECT TITLE	DRAWING TITLE
Construction of Doksum Primary School	AS_STATED_IN_THE_DRAWING

NOTES

1. ALL DIMENSIONS ARE IN MILLIMETER & ELEVATION IN METER UNLESS SPECIFIED OTHERWISE.
2. ALL DIMENSIONS MEASURE UNFINISHED SURFACES UNLESS SPECIFIED OTHERWISE.
3. DIMENSIONS ARE TO BE READ AND NOT SCALED OFF.
4. ANY DISCREPANCIES IN THE DRAWING ARE TO BE BROUGHT TO THE IMMEDIATE NOTICE OF THE SUPERVISION TEAM.

CHECKED	APPROVED	DATE	DRAWING NO.
			AR_05
		MARCH, 2026	SCALE
			NTS

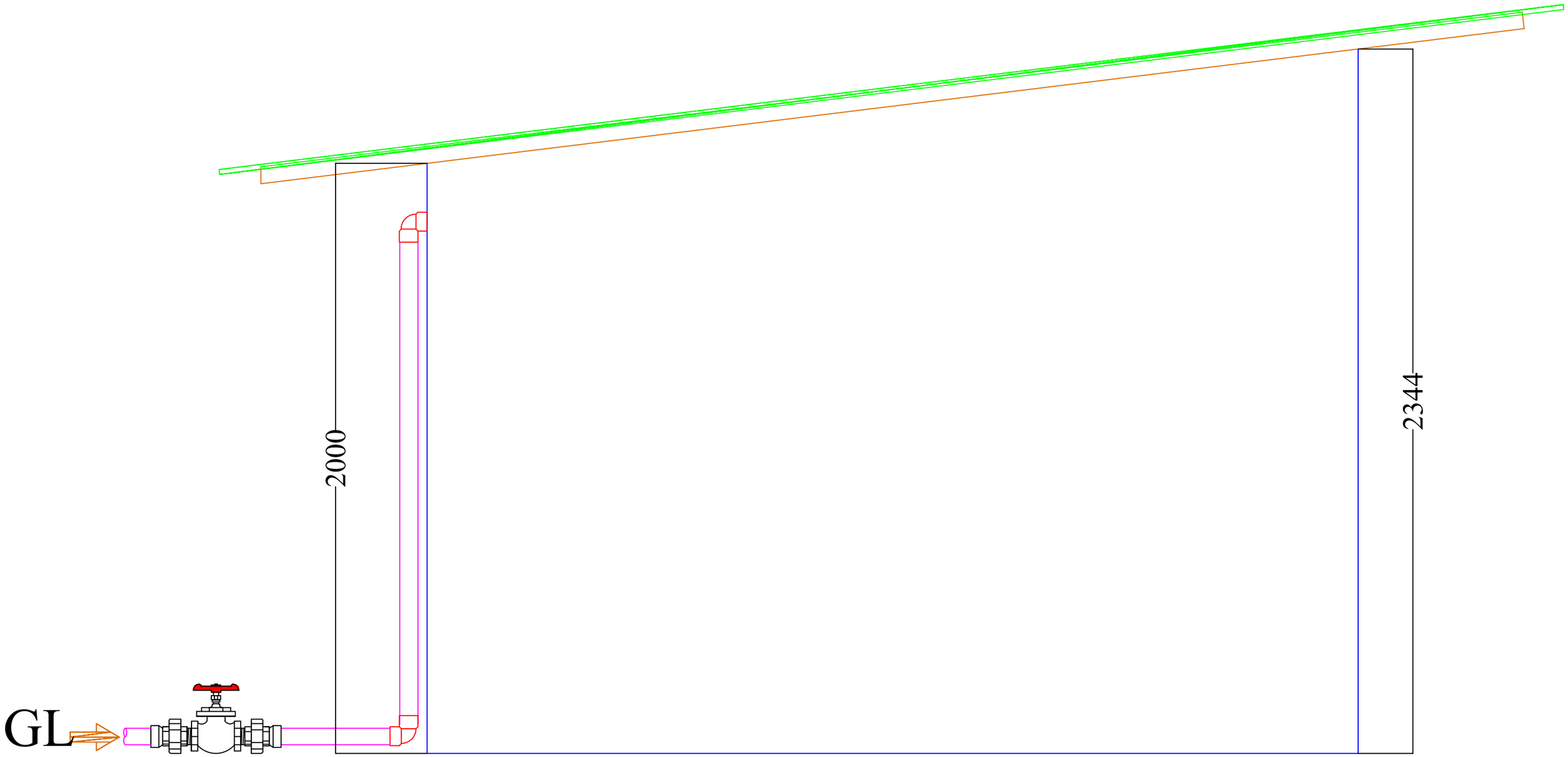

REAR ELEVATION

Khorlochhu	ARCHITECTURAL DRAWING	NOTES	CHECKED	APPROVED	DATE	DRAWING NO.
	PROJECT TITLE	DRAWING TITLE				AR_06
	Construction of Doksum Primary School	AS_STATED_IN_THE_DRAWING			MARCH, 2026	SCALE
						NTS

1. ALL DIMENSIONS ARE IN MILLIMETER & ELEVATION IN METER UNLESS SPECIFIED OTHERWISE.
2. ALL DIMENSIONS MEASURE UNFINISHED SURFACES UNLESS SPECIFIED OTHERWISE.
3. DIMENSIONS ARE TO BE READ AND NOT SCALED OFF.
4. ANY DISCREPANCIES IN THE DRAWING ARE TO BE BROUGHT TO THE IMMEDIATE NOTICE OF THE SUPERVISION TEAM.